NATIONAL AERONAUTICS AND SPACE ADMINISTRATION

(NASA-CR-147601) TERMINAL AREA ENERGY MANAGEMENT REGIME INVESTIGATIONS UTILIZING AN 0.030-SCALE MODEL (47-0) OF THE SPACE SHUTTLE VEHICLE ORBITER CONFIGURATION 140A/B/C/R IN THE AMES RESEARCH CENTER 11 BY G3/16

N76-30271
HC $21.25
Unclas
49193

SPACE SHUTTLE

AEROTHERMODYNAMIC DATA REPORT

JOHNSON SPACE CENTER

HOUSTON, TEXAS

DATA MANagement services

SPACE DIVISION CHRYSLER CORPORATION

July 1976

DMS-DR-2254
NASA CR-147,601
VOLUME 11 OF 13

TERMINAL AREA ENERGY MANAGEMENT REGIME INVESTIGATIONS UTILIZING AN 0.030-SCALE MODEL (47-0) OF THE SPACE SHUTTLE VEHICLE ORBITER CONFIGURATION 140A/B/C/R IN THE AMES RESEARCH CENTER 11 X 11 FOOT TRANSONIC WIND TUNNEL (OA148)

by

P. J. Hawthorne
Rockwell International Space Division

Prepared under NASA Contract Number NAS9-13247

by

Data Management Services
Chrysler Corporation Space Division
New Orleans, La. 70189

for

Engineering Analysis Division

Johnson Space Center
National Aeronautics and Space Administration
Houston, Texas

WIND TUNNEL TEST SPECIFICS:

Test Number:	ARC 11-073
NASA Series Number:	OA148
Model Number:	47-0
Test Dates:	May 5 through May 17, 1975
Occupancy Hours:	220

FACILITY COORDINATOR:

Stuart L. Treon
Mail Stop 227-5
Ames Research Center
Moffett Field, Calif. 94035

Phone: (415) 922-5850

AERODYNAMICS ANALYSIS ENGINEERS:

S. Kraus
J. H. Reichert
Rockwell International
Space Division
12214 Lakewood Blvd.
Mail Code AC07
Downey, Calif. 90241

Phone: (213) 922-4831

PROJECT ENGINEERS:

P. J. Hawthorne
J. Marroquin
M. D. Milam
Rockwell International
Space Division
12214 Lakewood Blvd.
Mail Code AD38
Downey, Calif. 90241

Phone: (213) 922-3785

R. E. Ellington
J. J. Brownson
Ames Research Center
Mail Stop 227-5
Moffett Field, Calif. 94035

Phone: (415) 965-6262

DATA MANAGEMENT SERVICES:

Prepared by: Liaison--D. A. Sarver
Operations--W. B. Meinders

Reviewed by: D. E. Poucher

Approved: J. L. Glynn, Manager
Data Operations

Concurrence: N. D. Kemp, Manager
Data Management Services

Chrysler Corporation Space Division assumes no responsibility for the data presented other than display characteristics.

TERMINAL AREA ENERGY MANAGEMENT

REGIME INVESTIGATIONS UTILIZING AN 0.030-SCALE

MODEL (47-0) OF THE SPACE SHUTTLE VEHICLE

ORBITER CONFIGURATION 140A/B/C/R IN THE

AMES RESEARCH CENTER 11 x 11 FOOT

TRANSONIC WIND TUNNEL (OA148)

by

P. J. Hawthorne, Rockwell International Space Division

ABSTRACT

This report documents data obtained in wind tunnel test OA148.

The objectives of the test series were to:

1) obtain pressure distributions, forces and moments over the vehicle 5 Orbiter in the terminal area energy management (TAEM) and approach phases of flight.

2) obtain elevon and rudder hinge moments in the TAEM and approach phases of flight.

3) obtain body flap and elevon loads for verification of loads balancing with integrated pressure distributions.

4) obtain pressure distributions near the short OMS pods in the high subsonic, transonic and low supersonic Mach number regimes.

Testing was conducted over a Mach number range from 0.6 to 1.4 with Reynolds number variations from 4.57×10^6 to 2.74×10^6 per foot. Model angle-of-attack was varied from -4 to 16 degrees and angles of side slip ranged from -8 to 8 degrees.

TABLE OF CONTENTS

INDEX OF MODEL FIGURES

INDEX OF DATA FIGURES

INDEX OF DATA FIGURES (Concluded)

FIGURE NUMBER	TITLE	CONDITIONS VARYING	PLOTTED COEFFICIENTS SCHEDULE	PAGES
14	VERTICAL TAIL SPEEDBRAKE DEFLECTION 35 DEGREES	ALPHA, MACH Z/BV, BETA	F	1375-1442

PLOTTED COEFFICIENTS SCHEDULE:

A) CY, CYN and CBL versus BETA

B) CN, CA and CLM versus ALPHA

C) CHEO, CHEI, CHETOT and CHBF versus ALPHA

D) CP versus X/LB

E) CP versus X/CW

F) CP versus X/CV

NOMENCLATURE

Symbol	Plot Symbol	Definition
A_b	AB	total Orbiter base area, ft^2
A_i	Ai	area over which P_i acts, ft^2
A_{sb}	ASB	speed brake base area, ft^2
b	BREF, BW	Orbiter wing span, in
b_v	BV	vertical tail reference span, in
C_{A_u}	CAU	Orbiter uncorrected axial force coefficient
C_A	CA	Orbiter axial force coefficient with sting cavity adjusted to average base pressure
C_{A_F}	CAF	Orbiter forebody axial force coefficient.
$C_{A_{sc}}$	CASC	Orbiter sting cavity axial force coefficient.
C_{D_U}	CDU	Orbiter uncorrected drag coefficient
$C_{h_{bf}}$	CHBF	body flap hinge moment coefficient, about hinge line X_o = 1532.0
$C_{h_{ei}}$	CHEI	inner elevon hinge moment coefficient, about hinge line X_o = 1387.0
$C_{h_{eo}}$	CHEO	outer elevon hinge moment coefficient, about hinge line X_o = 1387.0
$C_{H_{e_{TOT}}}$	CHETOT	total right elevon hinge moment coefficient
C_{L_U}	CLU	Orbiter uncorrected lift coefficient
C_ℓ	CBL	Orbiter rolling moment coefficient, body axis system

NOMENCLATURE (Continued)

Symbol	Plot Symbol	Definition
C_m	CLM	Orbiter pitching moment coefficient with sting cavity adjusted to average base pressure, referenced to Orbiter MRC.
C_{m_u}	CLMU	Orbiter uncorrected pitching moment coefficient
C_{m_F}	CLMF	Orbiter forebody pitching moment coefficient referenced to orbiter MRC.
$C_{m_{sc}}$	CLMSC	Orbiter sting cavity pitching moment coefficient, referenced to Orbiter MRC
C_{N_u}	CNU	Orbiter uncorrected normal force coefficient
C_N	CN	Orbiter normal force coefficient with sting cavity adjusted to average base pressure
C_{N_F}	CNF	Orbiter forebody normal force coefficient
$C_{N_{sc}}$	CNSC	Orbiter sting cavity normal force coefficient
C_n	CYN	Orbiter yawing moment coefficient, body axis system
C_{pi}	CPi	surface tap pressure coefficient, port i, $(P_i - P_\infty)/q$
C_Y	CY	Orbiter side force coefficient
$C_{[X][Y]}$	C[X][Y]	base area force and moment coefficients. The first subscript (post fix) designates the type of coefficient, the second the pressure tap and it's associated area. The symbolic vectors [X] and [Y] are defined below.
[X]=		
A	A	axial force
N	N	normal force
Y	Y	side force
m	LM	pitching moment
n	YN	yawing moment
ℓ	BL	rolling moment

NOMENCLATURE (Continued)

Symbol	Plot Symbol	Definition
[Y]=		
1,2,3	1,2,3	areas associated with pressure taps
4,5,6	4,5,6	1 through 6 see figure 2b
sc	SC	sting cavity area
bf	BF	upper body flap area
l_b	LB	Orbiter reference body length, IML nose to X_o = 1528.3, in.
ℓ_{REF}	LREF	longitudinal reference length, Orbiter mean aerodynamic chord, in
	LU/DU	uncorrected lift to drag ratio, CLU/CDU
M	MACH	freestream Mach number
Φ	PHI	angular cylindrical coordinate position around Orbiter body - deg.
P_i	Pi	pressure at surface tap i, PSF
P_∞	P	freestream static pressure, PSF
P_t	PT	freestream total pressure, PSF
q	Q	freestream dynamic pressure, PSF
	RN/L	unit Reynolds number, million per foot
S	SREF	wing reference area, ft^2
T_t	TTR	freestream total temperature, °R
X_{cp}	XCP/L	center of pressure location referred to l_b
X_o/L_o	X/LB	longitudinal location of body surface, fraction of body length

NOMENCLATURE (Concluded)

Symbol	Plot Symbol	Definition
X/C	X/CW	chordwise location on wing surface, fraction of local chord
X/C_v	X/CV	chordwise location on vertical tail, fraction of local chord
η_v	Z/BV	spanwise location on vertical tail, fraction of vertical tail span
η	2Y/BW	spanwise location on wing, fraction of semi span
X_{mrp}	XMRP	longitudinal location of moment reference point
X_T	XT	longitudinal moment transfer distance from Orbiter balance center to Orbiter MRC, in
Y_{mrp}	YMRP	lateral location of moment reference point
Z_T	ZT	vertical moment transfer distance from Orbiter balance center to Orbiter MRC, in
α	ALPHA	angle of attack, degrees
β	BETA	angle of sideslip, degrees
δ_{bf}	BDFLAP	body flap deflection, degrees
δ_{eL}	ELVN-L, L-ELVN	left elevon deflection, degrees
δ_{eR}	ELVN-R, R-ELVN	right elevon deflection, degrees
δ_r	RUDDER	rudder deflection, degrees
δ_{sb}	SPDBRK	speed brake deflection, degrees
Z_{mrp}	ZMRP	vertical location of moment reference point
	$$	mask character used to indicate all possible values for this test 01 through 85

REMARKS

During the course of the test it was necessary to replumb the scanivalves. The resultant time loss necessitated deleting the priority 4 runs which incorporated the use of the metric vertical tail.

Data obtained from pressure taps 184, 296 and 347 are suspect due to slow leaks noticed while leak checking individual model [illegible] taps.

Body flap hinge moment data for datasets [illegible] through RE8005 have a -15% drift while datasets RE8006 and RE8007 have a +10% drift due to data recording system errors. System checks during the remainder of the test indicate a system error of less than 4% for body flap hinge moment data.

Rolling moment data has an approximate -.003 bias in the coefficient. The reason for this was not determined, but possible sources are fabrication tolerances and/or differential stiffness of the left and right elevon panels.

Distortion of the instrumented elevon shaft appears to have occurred around run 310 due to model assembly difficulties and the maximum loads encountered at these test conditions. A comparison of measured elevon deflection before and after the test with the nominal setting is presented below.

Elevon Panel	Nominal	Pre-Test	Post-Test
Inboard right	-10	-9° 36'	-8° 55'
	-4	-3° 34'	-2° 55'
	0	+0° 10'	+1° 02'
	4	+4° 26'	+4° 28'
	10	+10°32'	+10°39'
Outboard right	-10	-9° 36' *	-8° 15'
	-4	-3° 34' *	-2° 20'
	0	+0° 10' *	+1° 05'
	4	+4° 26' *	+3° 59'
	10	+10°32' *	+10°18'

* Inboard only was measured but was the same as outboard panel (see Ref 2)

CONFIGURATION INVESTIGATED

The Rockwell International model 47-0 Space Shuttle Orbiter Vehicle was utilized in this test series. The model was originially constructed to -140A/B lines, but was modified prior to this test with the addition of the -140C OMS pods, six inch bevelled interpanel elevon gaps and uncovered RCS forward thrustor parts. To denote these additions, the additional designations "C" (for -140C OMS pods) and "R" (for RCS thrustors) were added, and the slashes deleted for convenience on Table II(designated "-140 ABCR").

In data sets RE8069 to 085 the RCS thrustor ports in the nose were filled reverting the configuration to -140A/B/C modified with body B_{26}.

The following nomenclature denotes the model components:

Component	Description
B_{26}	140A/B fuselage (VL70-000140A, VL70-000140B)
B_{70}	140A/B fuselage (VL70-000140A, VL70-000145, VL70-000140B, VL70-000143A, VL70-000139) with RCS thrustor parts (VL70-08501, VL70-08502, VL70-08296)
C_9	140A/B basic canopy (VL70-000140A, VL70-000143A)
E_{44}	140A/B elevons (VL70-000200, VL70-006089, VL70-006092) with six inch bevelled interpanel gaps, no flipper door
F_9	140A/B body flap (VL70-000140B, VL70-000200)
M_{16}	OMS-RCS pods for 140C Orbiter
N_{28}	OMS basic nozzles
R_5	basic Orbiter rudder (VL70-000146A, VL70-000095)
V_8	basic Orbiter vertical tail (VL70-000140A, VL70-000146A)
W_{116}	basic 140A/B wing (VL70-000140B, VL70-000200)

CONFIGURATIONS INVESTIGATED (Concluded)

Designated configurations are:

-140ABCR $\equiv B_{70}\ C_9\ E_{44}\ F_9\ M_{16}\ N_{28}\ R_5\ V_8\ W_{116}$

-140 ABC $\equiv B_{26}\ C_9\ E_{44}\ F_9\ M_{16}\ N_{28}\ R_5\ V_8\ W_{116}$

TEST FACILITY DESCRIPTION

The Ames Research Center Unitary Plan 11- by 11-Foot Transonic Wind Tunnel is a closed-circuit, air-medium, variable-density facility capable of attaining Mach numbers from 0.6 to 1.4 at Reynolds numbers from 1.7×10^6/ft to 9.4×10^6/ft. The test section is 22 feet long, and models are installed on internal strain-gauge balances mounted to sting-type support systems.

Shadowgraph and Schlieren photographic equipment is available, and pressure transducer instrumentation is provided.

Tunnel operating temperature is 580°R. Extended high Reynolds number runs are restricted by power availability.

DATA REDUCTION

Standard NASA/Ames data reduction equations were used to reduce forces, moments, and pressures to coefficient form. Orbiter main balance force and moment coefficients were computed using the following equations:

Symbol	Orbiter main balance measurement
NF	Normal Force
AF	Axial Force
PM	Pitching Moment
YM	Yawing Moment
SF	Side Force
RM	Rolling Moment

$$C_{A_u} = AF / (q\ S) \qquad C_{L_u} = C_{N_u} \cos\alpha - C_{A_u} \sin\alpha$$

$$C_{N_u} = NF / (q\ S) \qquad C_{D_u} = C_{N_u} \sin\alpha + C_{A_u} \cos\alpha$$

$$C_Y = SF / (q\ S)$$

$$C_{m_u} = \frac{PM}{qSc} + \frac{C_A \cdot Z_T}{c} - \frac{C_N \cdot X_T}{c}$$

$$C_\ell = \frac{R\ M}{qSb} + \frac{C_Y \cdot Z_T}{b}$$

$$C_n = \frac{YM}{qSb} - \frac{C_Y \cdot X_T}{b}$$

Moment Transfer Distances

X_T = 0.572 in.

Y_T = 0

Z_T = 0.450 in.

The Moment Reference Center about which the data was reduced is located at

	Orbiter (Full Scale)
X_o	1076.68
Y_o	0
Z_o	375.00

Balance coefficients were grouped into datasets RE80$$.

DATA REDUCTION (Continued)

Hinge moments and hinge moment coefficients were computed using the following equations:

Elevon hinge moments (inboard and outboard).

$$HM_{e_I} = (HM1-HM2)\ (M1/D1) + HM1$$

$$HM_{eo} = (HM3-HM4)\ (M3/D3) + HM3$$

where

HMi = measured moment on strain gage i

D1 = distance between gages 1 and 2, .49335 in.

D3 = distance between gages 3 and 4, .45800 in.

M1 = moment transfer distance for inboard elevon, .93825 in.

M3 = moment transfer distance for outboard elevon, .92250 in.

Elevon hinge moment coefficients

Inboard, $C_{H_{e_I}} = H_{M_{e_I}} / (q\ S_e\ c_e)$

Outboard, $C_{H_{eo}} = H_{M_{e_o}} / (q\ S_e\ c_e)$

Total, $C_{H_{e_{TOT}}} = C_{H_{e_I}} + C_{H_{e_o}}$

S_e = elevon reference area, 0.189 ft.^{2}

c_e = elevon reference MAC, 2.721 in.

Body flap hinge moment coefficient

$C_{H_{bf}} = HM_{bf} / (q\ S_{bf}\ c_{bf})$

HM_{bf} = measured body flap hinge moment

S_{bf} = body flap reference area, 0.12834 ft.^{2}

c_{bf} = body flap reference MAC, 2.541 in.

Hinge moment coefficients are part of datasets RE8X$$.

Pressure coefficients for all model orifice pressure measurements were computed using this equation:

$$C_{P_i} = (P_i - P_\infty)/q$$

where P_i = pressure at model orifice i

P_∞ = tunnel static pressure

q = tunnel dynamic pressure

Other data reduction constants include:

S = wing reference area, 2.4210 ft.^{2}

c = wing reference chord, 14.2443 in.

b = wing reference span, 28.1004 in.

After the data had been reduced to coefficient form by NASA/AMES,DMS interpolated it to nominal α's and β's. Then 2 types of base and sting cavity area coefficients were calculated. When they are applied 3 types of balance coefficient data exists. These can be distinguished by the last subscript (symbolic name) or postfix (mnemonic name). The key is given below

U ~ uncorrected coefficients.

~ coefficients with sting cavity pressure corrected to base pressure (without a suffix).

F ~ forebody coefficients with the base area pressure corrected to freestream pressure.

Only the correction coefficients associated with base pressure tapes 1 through 4 were applied to the longitudinal orbiter coefficients.

Figure 2b illustrates the base area associated with each pressure tap. Alphabetic characters bf and sc designate body flap and sting cavity areas, respectively. Base area coefficient names have a numeric character which designates the pressure tap number. Base coefficients for vertical tail areas 5 and 6 were calculated but not applied to the total orbiter coefficients. Base area coefficient values are tabulated in the appendix. A detailed derivation of these coefficients follows. It is concluded by a matrix of base area geometric properties.

The orbiter sting cavity force and moment coefficients were computed as:

$$C_{A_{sc}} = \frac{(C_{p2} - C_{p1})\, A_1}{S}$$

$$C_{N_{sc}} = \frac{(C_{p2} - C_{p1})\, A_1 \tan 12.55°}{S}$$

$$C_{m_{sc}} = C_{A_{sc}} \frac{Z_t}{c} - C_{N_{sc}} \frac{X_{sc}}{c}$$

The orbiter force and moment coefficients corrected for the difference between balance cavity pressure and orbiter base pressure:

$$C_A = C_{A_u} - C_{A_{sc}}$$

$$C_N = C_{N_u} - C_{N_{sc}}$$

$$C_m = C_{m_u} - C_{m_{sc}}$$

These orbiter coefficients are part of datasets KE80$$.

Orbiter base force and moment coefficients were calculated as follows:

Upper base area

$$C_{N2u} = -(C_{p2}\ A_{2u} \tan 16°)/S$$

$$C_{A2u} = -(C_{p2}\ A_{2u})/S$$

$$C_{m2u} = \frac{C_{A2u}\ Z_{2u}}{c} - \frac{C_{N2u}\ X_{2u}}{c}$$

Lower base area

$$C_{N2_\ell} = -(C_{p2}\ A_{2_\ell} \tan 10°)/S$$

$$C_{A2_\ell} = -(C_{p2}\ A_{2_\ell})/S$$

$$C_{m2_\ell} = C_{A2_\ell} \frac{Z_{2\ell}}{c} - C_{N2_\ell} \frac{X_{2\ell}}{c}$$

Total base area, A_2

$$C_{N2} = C_{N2_u} + C_{N2_\ell}$$

$$C_{A2} = C_{A2_u} + C_{A2_\ell}$$

$$C_{m2} = C_{m2_u} + C_{m2_\ell}$$

OMS pod base area, A_3

(This assumes the surface is perpendicular to the orbiter X-axis)

$$C_{A3} = -(C_{p3}\ A_3)/S$$

$$C_{m3} = C_{A3} \frac{Z_3}{c}$$

OMS pod base area, A_4

(This assumes the surface is perpendicular to the orbiter X-axis)

$$C_{A4} = -(C_{p4}\ A_4)/S$$

$$C_{m4} = C_{A4}\ \frac{Z_4}{c}$$

Coefficients for the above areas are grouped into datasets EE8D$$.

Upper surface of body flap

$$C_{A_{bf}} = \frac{-C_{p_{bf}}\ A_{bf}}{S} \sin\ (\delta_{bf} + 6.88°)$$

$$C_{N_{bf}} = \frac{-C_{p_{bf}}\ A_{bf}}{S} \cos\ (\delta_{bf} + 6.88°)$$

$$C_{m_{bf}} = \frac{C_{A_{bf}}\ Z_{bf}}{c} - \frac{C_{N_{bf}}\ X_{bf}}{c}$$

where:

$$C_{p_{bf}} = \frac{C_{p200} + C_{p201} + C_{p204} + C_{p205}}{4}$$

The orbiter force and moment coefficients adjusted to free stream pressure (forebody coefficients).

$$C_{A_F} = C_{A_u} - \left(\frac{-C_{p1}\ A_1}{S} + \sum_{i=2}^{4} C_{A_i} + C_{A_{bf}}\right)$$

$$C_{N_F} = C_{N_u} - \left(C_{N2} + C_{N_{bf}}\right)$$

$$C_{mF} = C_{mu} - \left(\sum_{i=2}^{4} C_{m_i} + C_{m_{bf}}\right)$$

These orbiter coefficients are part of datasets KE80$$.

Vertical tail "undercarriage" area, A_5

Top Segment:

$$C_{N5t} = (C_{p5}\ A_{5t} \tan 63.75°)/S$$

$$C_{A5t} = -(C_{p5} A_{5t})/S$$

$$C_{m5t} = C_{A5t} \frac{Z_{5t}}{c} - C_{N5t} \frac{X_{5t}}{c}$$

Middle Segment:

$$C_{N5m} = (C_{p5} A_{5m} \tan 26.1426°)/S$$

$$C_{A5m} = -(C_{p5} A_{5m})/S$$

$$C_{m5m} = C_{A5m} \frac{Z_{5m}}{c} - C_{N5m} \frac{X_{5m}}{c}$$

Bottom Segment:

$$C_{N5b} = (C_{p5} A_{5b} \tan 21.94°)/S$$

$$C_{A5b} = -(C_{p5} A_{5b})/S$$

$$C_{m5b} = C_{A5b} \frac{Z_{5b}}{c} - C_{N5b} \frac{X_{5b}}{c}$$

Total area, A_5:

$$C_{N5} = C_{N5t} + C_{N5m} + C_{N5b}$$

$$C_{A5} = C_{A5t} + C_{A5m} + C_{A5b}$$

$$C_{M5} = C_{m5t} + C_{m5m} + C_{m5b}$$

Vertical Tail base area, A_6:

Segment above rudder

$$C_{N6u} = (C_{p6} A_{6u} \tan 63.75°)/S$$

$$C_{A6u} = (C_{p6} A_{6u})/S$$

$$C_{m6u} = C_{A6u} \frac{Z_{6u}}{c} - C_{N6u} \frac{X_{6u}}{c}$$

Rudder/Speed brake base:

$$C_{A6_\ell} = C_{p6}\, A_{6'_\ell}\, [\sin(\theta - 55.1667°)\cos 55.1667° + \cos(\theta - 55.1667°)\sin 55.1667°\cos(\delta r)]/S$$

$$C_{N6_\ell} = C_{p6}\, A_{6'_\ell}\, [\sin(\theta - 55.1667°)\sin 55.1667° - \cos(\theta - 55.1667°)\cos 55.1667°\cos(\delta r)]/S$$

$$C_{Y6_\ell} = C_{p6}\, A_{6'_\ell}\, \cos(\theta - 55.1667°)\sin \delta r/S$$

$$C_{m6_\ell} = [C_{A6_\ell}\,(Z_{6_\ell}) - C_{N6}\,(X_{6_\ell})]/c$$

$$C_{\ell 6_\ell} = [C_{Y6_\ell}\,(Z_{6_\ell})]/b$$

$$C_{n6_\ell} = -[C_{Y6}\,(X_{6_\ell})]/b$$

$$\theta = \tan^{-1}\left[\frac{5.456791 + .573209\cos\left(\frac{\delta SB}{2}\right)}{3.797715 - .823715\cos\left(\frac{\delta SB}{2}\right)}\right]$$

$$A_{6'_\ell} = A_{6_\ell}/\sin\theta$$

Total area, A_6:

$$C_{A6} = C_{A6u} + C_{A6\ell}$$

$$C_{N6} = C_{N6u} + C_{N6\ell}$$

$$C_{Y6} = C_{Y6\ell}$$

$$C_{m6} = C_{m6u} + C_{m6\ell}$$

$$C_{\ell 6} = C_{\ell 6\ell}$$

$$C_{n6} = C_{n6_\ell}$$

Vertical tail area coefficient data are grouped into datasets GE8D$$.

BASE GEOMETRIC PROPERTIES MATRIX

Description	Sub-script	Area A - ft.^{2}	Distance between Centroid and MRC vertical Z - in.	Distance between Centroid and MRC longitudinal X - in.
Sting cavity	sc	0.076699	0.45	12.199
Body flap upper surface	bf	0.128	- 2.64	13.659
Orbiter balance cavity	1	0.076699	0.45	12.199
Orbiter base orifice 2 lower	2ℓ	0.133889	- 1.32	12.617
Orbiter base orifice 2 upper	2u	0.0818055	2.07	12.384
Lower OMS pod	3	0.030472	2.68	NA
Upper OMS pod	4	0.074166	3.63	NA
Vertical tail "undercarriage" bottom	5b	0.003565	4.612	12.395
Vertical tail "undercarriage" middle	5m	0.002610	5.336	14.079
Vertical tail "undercarriage" top	5t	0.000341	5.97	15.185
Vertical tail above rudder	6u	0.000798	12.656	18.482
Base area of speed brake	6ℓ	Varies with speed brake deflection		

NOTES: Sting cavity and Orbiter balance cavity are synonymous.

NA - not applicable.

DATA REDUCTION (Continued)

δ_{sb}	$A6_\ell$ ft^2
0	0.0066036
25	0.0456000
35	0.0621000
55	0.0950800
85	0.1551400

$$X_{6\ell} = 15.045 + 1.442277\ [1-\cos\ (\delta sb/2)]$$

$$Z_{6\ell} = 9.755 + 0.501827\ [1-\cos\ (\delta sb/2)]$$

Standard DMS loads cycle test procedures were used to process the OA148 pressure data. First numerous pressure distribution plots were released. Analysis of these produced bad pressure data list. This list is reproduced below:

DATA REDUCTION (Continued)

OA148 Bad Pressure Data

Component	Dataset No.	Tap No.	β	α
Fuselage (B)	1	143	4	-4
	1	148	4	-4
	1	150	4	-4
	1	152	4	-4
	1	186	4	-4
	1	187	4	-4
	1	189	4	-4
	1	191	4	-4
	1	193	4	-4
Lower Wing (L)	1 → 7	231	ALL	ALL
	1 → 85	290	ALL	ALL
	1	316	4	-4
	1	317	4	-4
	1	337	4	-4
	1	338	4	-4
	1	358	4	-4
	1	378	4	-4
	1	379	4	-4
	1	398	4	-4
Upper Wing (U)	1 → 7	247	ALL	ALL
	1	357	4	-4
Body Flap (F)	24	205	-4	12
Speed Brake (K)	1 → 85	822	ALL	ALL
Vertical Tail (V)	8	443	ALL	ALL
	ALL	1444	ALL	ALL
	79	1453	-4	-4
	79	1454	-4	-4

Note: Wind tunnel pressure data tabulated in the appendix have the original bad data values.

These points were eliminated from further processing. The remaining data were interpolated to nominal alpha and beta values. Processing was completed with the release of a magnetic tape containing the final interpolated pressure coefficients.

This report contains plots and tabular listings for both force and pressure data. Plotted force data illustrates lateral-directional, longitudinal and hinge moment characteristics of the configuration tested. Plotted pressure data illustrates the effect of several control deflections and attitude changes on local pressure distributions. The multiple volume appendix contains a tabulated listing of the basic force and pressure data. Listing of the interpolated base area coefficients is also included. The plotted and tabulated data are arranged in the following manner:

VOLUME NO.	CONTENTS
1	Force data plots showing lateral-directional longitudinal and hinge moment characteristics.
2	Plots illustrating the effect of control surface deflections on fuselage, wing and vertical tail pressure distributions.

DATA REDUCTION (Concluded)

VOLUME NO.	CONTENTS
3	Tabulated Force Data

Dataset	Data type
RE8O$$	source balance coefficients
RE8X$$	source hinge moment coefficients
RE8Y$$	source base pressure coefficients
KE8O$$	interpolated balance coefficients adjusted for cavity pressure and forebody coefficients
EE8D$$ FE8D$$	interpolated base and cavity area coefficients
GE8D$$	interpolated vertical tail base area coefficients

Tabulated Pressure Data

	Component	Fourth Character*	Page
4, 5	orbiter fuselage	B	1
6,7,8	lower wing	L	1271
9,10,11	upper wing	U	3147
12	upper body flap	F	5405
12	lower body flap	G	5774
13	speed brake	K	6143
13	vertical tail	V	6547

* The fourth character in each dataset identifier (i.e., XE8BXX, B for Fuselage) represents the individual component.

REFERENCES

1. SD75-SH-0106, "Pretest Information for OA148 of the 0.03-Scale 47-0 Pressure Loads Space Shuttle Model in the 11 x 11 Foot Leg of the NASA/ARC Unitary Plan Wind Tunnel," April 18, 1975.

2. MG-75-07-11, Rockwell International Corporation Internal Letter: "Model design Dimensional Varification Task 36: Elevon Deflection Angle Check of the 0.03-Scale SSV Model 47-0 (140A/B Configuration)". SAS/WTO/75-283, July 29, 1975.

TABLE I

TEST : 0A148

DATE : May 1975

TEST CONDITIONS

MACH NUMBER	REYNOLDS NUMBER (per foot)	DYNAMIC PRESSURE (pounds/sq. inch)	STAGNATION TEMPERATURE (degrees Fahrenheit)
0.60	4.57×10^6	4.166	120
0.90	3.41×10^6	4.166	120
1.10	3.05×10^6	4.166	120
1.25	2.86×10^6	4.166	120
1.40	2.74×10^6	4.166	120

BALANCE UTILIZED: ARC Task MK XX A

	CAPACITY:	ACCURACY:	COEFFICIENT TOLERANCE:
NF	3000 lbf/gage		
SF	1500 lbf/gage		
AF	600 lbf		
PM	27,000 in-lbf		
RM	4000 in-lbf		
YM	10,500 in-lbf		

COMMENTS: Maximum normal and side force dependent upon point of application

APC 11-073

TABLE II.

TEST: OA 148

DATA SET RUN NUMBER COLLATION SUMMARY

DATE: POST TEST

DATA SET IDENTIFIER	CONFIGURATION	α	β	δ_R	δ_{SB}	δ_{DF}	δ_{eL}	δ_{eR}	α -4	0	4	8	12	16	MACH NUMBERS				TEST RUN NUMBER
RE8001	-140 ABCR	B	D	0	55	163	0	0	32	33	34	35	58	59		1.4			
002		A	D						38	39	40	41	42			1.25			
003		A	D						43	44	45	46	47			1.1			
004		A	D						48	49	50	51	52			0.9			
005		A	C						53	54	55	56	57			0.6			
006	-140 ABCR	A	C	0	55	225	0	0	60	61	62	63	64			0.6			
007		A	D						68	66	67	69	70			0.9			
008	-140 ABCR	B	D	0	85	225	0	0	71	72	73	74	75	76		1.4			
009		A	D						77	78	79	80	81			1.25			
010		A	D						82	83	84	85	86			1.1			
011		A	D						87	88	89	90	91			0.9			
012		A	C						92	93	94	95	96			0.6			

1 7 13 19 25 31 37 43 49 55 61 67 75 76

COEFFICIENTS IDVAR (1) IDVAR (2) NDV

α OR β SCHEDULES

A_α = -4, 0, 4, 8, 12

B_α = -4, 0, 4, 8, 12, 16

C_β = -8, -4, 0, 4, 8

D_β = -4, 0, 4

NASA-MSFC-MAF

TABLE II - Continued.

TEST: OA 148 — DATA SET/RUN NUMBER COLLATION SUMMARY — DATE: POST TEST

DATA SET IDENTIFIER	CONFIGURATION	α	β	δ_e	δ_{SB}	δ_{BF}	δ_{BL}	δ_{BR}	α -4	0	4	8	12	16		MACH NUMBERS		
RE8013	-140 ABCR	B	D	0	35	0	0	0	97	98	99	100	101	102		1.4		
014		A	D						103	104	105	106	107			1.25		
015		A	D						108	109	110	111	112			1.1		
016		A	D						113	114	115	116	117			0.9		
017		A	C						118	119	120	121	122			0.6		
018	-140 ABCR	B	D	0	0	-11.7	0	0	123	124	125	126	127	128		1.4		
019		A	D						131	129	130	132	133			1.25		
020		A	D						134	135	136	137	138			1.1		
021		A	D						139	140	141	142	143			0.9		
022		A	C						144	145	146	147	148			0.6		
023	-140 ABCR	B	D	0	0	0	0	0	149	150	151	152	153	154		1.4		
024		A	D						155	156	157	158	159			1.25		
025		A	D						160	161	162	163	164			1.1		
026		A	D						165	166	167	168	169			0.9		
027		A	C						170	171	172	173	174			0.6		

TEST RUN NUMBER

1 7 13 19 25 31 37 43 49 55 61 67 75 76

COEFFICIENTS — IDVAR (1) — IDVAR (2) — NDV

α OR β SCHEDULES

NASA-MSFC-MAF

TABLE II. - Continued.

TEST: OA 148 | DATA SET/RUN NUMBER COLLATION SUMMARY | DATE: POST TEST

DATA SET IDENTIFIER	CONFIGURATION	α	β	δ_r	δ_{SB}	δ_{BF}	δ_{EL}	δ_{EE}	α -4	0	4	8	12	16	MACH NUMBERS				TEST RUN NUMBER
RE8028	140 ABCR	B	D	-10	35	163	10	0	175	176	177	178	179	180		1.4			
029		A	D						181	182	183	184	185			1.25			
030		A	D						186	187	188	189	190			1.1			
031		A	D						191	192	193	194	195			0.9			
032		A	C						196	197	198	199	200			0.6			
033	140 ABCR	B	D	+10	35	163	0	10	201	202	203	204	205	206		1.4			
034		A	D						207	208	209	210	211			1.25			
035		A	D						212	213	214	215	216			1.1			
036		A	D						217	218	219	220	221			0.9			
037		A	C						222	223	224	225	226			0.6			
038	140 ABCR	B	D	+10	85	163	10	10	227	228	229	230	231	232		1.4			
039		A	D						233	234	235	236	237			1.25			
040		A	D						238	239	240	241	242			1.1			
041		A	D						243	244	245	246	247			0.9			
042		A	C						248	249	250	251	252			0.6			

1 7 13 19 25 31 37 43 49 55 61 67 75 76

COEFFICIENTS | IDVAR (1) | IDVAR (2) | NDV

α OR β SCHEDULES

NASA-MSFC-MAF

TABLE II. - Continued.

TEST: OA 148

DATA SET RUN NUMBER COLLATION SUMMARY

DATE: POST TEST

DATA SET IDENTIFIER	CONFIGURATION	α	β	δ_R	δ_{SB}	δ_{BF}	δ_{BW}	δ_{eB}	α -4	0	4	8	12	16	MACH NUMBERS				TEST RUN NUMBER
ZE8043	140 ABCR	A	D	0	55	225	10	10	253	254	255	256	257			0.9			
044		A	C						258	259	260	261	262			0.6			
045	140 ABCR	A	D	0	55	225	4	4	263	264	265	266	267			0.9			
046		A	C						268	269	270	271	272			0.6			
047	140 ABCR	B	D	-10	85	163	4	4	273	274	275	276	277	278		1.4			
048		A	D						279	280	281	282	283			1.25			
049		A	D						284	285	286	287	288			1.1			
050		A	D						289	290	291	292	293			0.9			
051		A	C						294	295	296	297	298			0.6			
052	140 ABCR	B	D	-10	55	163	-4	+4	299	300	301	302	303	304		1.4			
053		A	D						305	306	307	308	309			1.25			
054		A	D						310	311	312	313	314			1.1			
055		A	D						315	316	317	318	319			0.9			
056		A	C						320	321	322	323	324			0.6			

1 7 13 19 25 31 37 43 49 55 61 67 75 76

COEFFICIENTS IDVAR (1) IDVAR (2) NDV

α OR β SCHEDULES

NASA-MSFC-MAF

TABLE II. - Continued.

TEST: OA 148 | DATA SET RUN NUMBER COLLATION SUMMARY | DATE: POST TEST

DATA SET IDENTIFIER	CONFIGURATION	α	β	δ_R	δ_{SB}	δ_{SF}	δ_{SL}	δ_{SR}	α -4	0	4	8	12	16	MACH NUMBERS			
RE8057	-140ABCR	B	D	10	55	16.3	4	-4	325	326	327	328	329	330		1.4		
058		A	D						331	332	333	334	335			1.25		
059		A	D						336	337	338	339	340			1.1		
060		A	D						341	342	343	344	345			0.9		
061		A	C						346	347	348	349	350			0.6		
063	-140ABCR	B	D	+5	55	16.3	-4	-4	351	352	353	354	355	356		1.4		
063		A	D						357	358	359	360	361			1.25		
064		A	D						362	363	364	365	366			1.1		
065		A	D						367	368	369	370	371			0.9		
066		A	C						372	373	374	375	376			0.6		
067	-140ABCR	A	D	0	55	22.5	-4	-4	377	378	379	380	381			0.9		
068		A	C						382	383	384	385	386			0.6		
069	-140ABC	A	D	0	55	22.5	-10	-10	387	388	389	390	391			0.9		
070		A	C						392	393	394	395	396			0.6		

TEST RUN NUMBER

1 7 13 19 25 31 37 43 49 55 61 67 73 76

COEFFICIENTS

IDVAR (1) IDVAR (2) NDV

α OR β SCHEDULES

NASA-MSFC-MAF

ORIGINAL PAGE IS OF POOR QUALITY

TABLE II. - Concluded.

TEST: OA148 | DATA SET/RUN NUMBER COLLATION SUMMARY | DATE: POST TEST

DATA SET IDENTIFIER	CONFIGURATION	α	β	δ_R	δ_{SB}	δ_{DF}	δ_{EL}	δ_{EB}	α -4	0	+4	8	12	16		MACH NUMBERS			TEST RUN NUMBERS
RE8071	-140 ABC	B	D	-5	55	16.3	-10	-10	397	398	399	400	401	402		1.4			
072		A	D						403	404	405	406	407			1.25			
073		A	D						408	409	410	411	412			1.1			
074		A	D						413	414	415	416	417			0.9			
075		A	C						418	419	420	421	422			0.6			
076	-140 ABC	B	D	+10	0	-11.7	+10	-10	423	424	425	426	427	428		1.4			
077		A	D						429	430	431	432	433			1.25			
078		A	D						434	435	436	437	438			1.1			
079		A	D						439	440	441	442	443			0.9			
080		A	C						444	445	446	447	448			0.6			
081	-140 ABC	B	E	10	0	-11.7	-10	+10	449	450	451	452	453	454		1.4			
082		A	E						455	456	457	458	459			1.25			
083		A	E						460	461	462	463	464			1.1			
084		A	F						465	466	467	468	469			0.9			
085		A	O						470	471	472	473	474			0.6			

1 7 13 19 25 31 37 43 49 55 61 67 75 76

α OR β SCHEDULES

COEFFICIENTS

E_β = 0 @ α = -4 0 8 16
-4 0 4 @ α = 4 12

IDVAR (1) IDVAR (2) NDV

F_β = 0 @ α = -4, 0, 8, 12
-4, 0, 4 @ α = 4

NASA-MSFC-MAF

TABLE III

MODEL DIMENSIONAL DATA

MODEL COMPONENT : BODY - B_{26}

GENERAL DESCRIPTION : Configuration 140A/B orbiter fuselage

NOTE: B_{26} is identical to B_{24} except underside of fuselage has been refaired to accept W_{116}.

MODEL SCALE: 0.030 MODEL DRAWING: SS-A00147, Release 12

DRAWING NUMBER : VL70-000143B, -000200, -000205, -006089, -000145
VL70-000140A, -000140B

DIMENSIONS :	FULL SCALE	MODEL SCALE
Length (OML: Fwd Sta. X_0 =235), In.	1293.3	38.799
Length (IML: Fwd Sta X =238), In.	1290.3	38.709
Max Width (@ X_0 = 1528.3), In.	264.0	7.920
Max Depth (@ X_0 = 1464), In.	250.0	7.500
Fineness Ratio	0.264	0.264
Area - Ft^2		
Max. Cross-Sectional	340.88	0.3068
Planform		
Wetted		
Base		

TABLE III (Continued)

MODEL COMPONENT : BODY - B_{70}

GENERAL DESCRIPTION : Configuration 140A/B orbiter fuselage with forward fuselage RCS thruster ports, otherwise B_{70} is identical to B_{26}.

MODEL SCALE: 0.030

DRAWING NUMBER : VL70-000140A, -000140B, -000143B, -000145, -000200, VL70-000205, -006089, -008501, -008502, -008296

DIMENSIONS :

	FULL SCALE	MODEL SCALE
Length (OML: Fwd Sta X_0=235), In.	1293.3	38.799
Length (IML: Fwd Sta X_0 =238), In.	1290.3	38.709
Max Width (@ X_0 = 1528.3), In.	264.0	7.920
Max Depth (@ X_0 = 1464), In.	250.0	7.500
Fineness Ratio	0.264	0.264
Area - Ft^2		
Max. Cross-Sectional	340.88	0.3068
Planform		
Wetted		
Base		

TABLE III (Cont'd)

MODEL COMPONENT : CANOPY - C_9

GENERAL DESCRIPTION : Configuration 3A. Canopy used with fuselage B_{26}.

MODEL SCALE: 0.030 MODEL DWG: SS-A00147, Release 12

DRAWING NUMBER : VL70-000143A

DIMENSIONS :	FULL SCALE	MODEL SCALE
Length (X_0=434.643 to 578), In.	143.357	4.301
Max Width (@ X_0 = 513.127), In.	152.412	4.572
Max Depth (@ X_0 = 485.0), In.	25.00	0.750
Fineness Ratio		
Area		
Max. Cross-Sectional		
Planform		
Wetted		
Base		

TABLE III (Cont'd)

MODEL COMPONENT ELEVON - E_{44}

GENERAL DESCRIPTION 6.0 In. F.S. gaps machined into E_{26} elevon. Flipper doors centerbody pieces, and tipseals are not simulated. (Data are for one of two sides.)

MODEL SCALE: 0.030

DRAWING NUMBER

DIMENSIONS	FULL SCALE	MODEL SCALE
Area - Ft^2	210.0	0.189
Span (equivalent), In.	349.2	10.476
Inb'd equivalent chord, In.	118.0	3.54
Outb'd equivalent chord, In.	55.19	1.656
Ratio movable surface chord/ total surface chord		
At Inb'd equiv. chord	0.2096	0.2096
At Outb'd equiv. chord	0.4004	0.4004
Sweep Back Angles, degrees		
Leading Edge	0.00	0.00
Trailing Edge	- 10.056	- 10.056
Hingeline	0.0	0.0
Area Moment (Product of Area & $\bar{c}$), Ft^3	1587.25	0.0429
Mean Aerodynamic Chord, In.	90.7	2.721

ORIGINAL PAGE IS OF POOR QUALITY

TABLE III (Cont'd)

MODEL COMPONENT : BODY FLAP - F_9

GENERAL DESCRIPTION : Configuration 140A/B

MODEL SCALE: 0.030

DRAWING NUMBER : VL70-000140B, -000200

DIMENSIONS :	FULL SCALE	MODEL SCALE
Length (Chord), In.	84.7	2.541
Max Width , In.	262.308	7.869
Max Depth , In.	23.00	0.690
Fineness Ratio		
Area - Ft^2		
Max. Cross-Sectional		
Planform	142.60	0.128
Wetted		
Base	41.90	0.0377

TABLE III (Cont'd)

MODEL COMPONENT : OMS POD - M_{16}

GENERAL DESCRIPTION : Configuration 140C orbiter OMS pod - short pod. External contour is to referenced drawings with 1/2" added to simulate TPS.

MODEL SCALE: 0.015

DRAWING NUMBER : VL70-008401, -008410

DIMENSIONS :

	FULL SCALE	MODEL SCALE
Length (OMS Fwd Sta X_0 =1310.5), In.	258.50	7.755
Max Width (@ X_0 = 1511), In.	136.8	4.104
Max Depth (@ X_0 = 1511), In.	74.70	2.241
Fineness Ratio	2.484	2.484
Area - Ft^2		
Max. Cross-Sectional	58.865	0.053
Planform		
Wetted		
Base		

TABLE III (Cont'd)

MODEL COMPONENT: OMS NOZZLES - N_{28}

GENERAL DESCRIPTION: Configuration 140A/B orbiter OMS nozzles.

MODEL SCALE: 0.030

DRAWING NUMBER: VL70-000140A (Location), SS-A00106, Release 9 (Contour)

DIMENSIONS:	FULL SCALE	MODEL SCALE
MACH NO.		
Length - In.		
Gimbal Point to Exit Plane		
Throat to Exit Plane		
Diameter - In.		
Exit		
Throat		
Inlet		
Area - ft^2		
Exit		
Throat		
Gimbal Point (Station) - In.		
Left Nozzle		
X_0	1518.0	45.54
Y_0	- 88.0	- 2.64
Z_0	492.	14.76
Right Nozzles		
X_0	1518.0	45.54
Y_0	88.0	2.64
Z_0	492.0	14.76
Null Position - Deg.		
Left Nozzle		
Pitch	15°49'	15°49'
Yaw	12°17'	12°17'
Right Nozzle		
Pitch	15°49'	15°49'
Yaw	12°17'	12°17'

TABLE III (Cont'd)

MODEL COMPONENT RUDDER - R,

GENERAL DESCRIPTION Configuration 140C orbiter rudder (identical to configuration 140A/B rudder).

MODEL SCALE: 0.030

DRAWING NUMBER VL70-000146B, -000095

DIMENSIONS	FULL SCALE	MODEL SCALE
Area - Ft^2	100.15	0.090
Span (equivalent), In.	201.00	6.030
Inb'd equivalent chord, In.	91.585	2.748
Outb'd equivalent chord, In.	50.833	1.525
Ratio movable surface chord/ total surface chord		
At Inb'd equiv. chord	0.400	0.400
At Outb'd equiv. chord	0.400	0.400
Sweep Back Angles, degrees		
Leading Edge	34.83	34.83
Trailing Edge	26.25	26.25
Hingeline	34.83	34.83
Area Moment (Product of area & $\bar{c}$), Ft^3	610.92	0.0165
Mean Aerodynamic Chord, In.	73.2	2.196

TABLE III (Cont'd)

MODEL COMPONENT: VERTICAL - V_8

GENERAL DESCRIPTION: Configuration 140C orbiter vertical tail.

(Identical to configuration 140A/B vertical tail.)

MODEL SCALE: 0.030

DRAWING NUMBER: VL70-000140C, -000146B

DIMENSIONS:	FULL SCALE	MODEL SCALE
TOTAL DATA		
Area (Theo) - Ft^2		
Planform	413.253	0.372
Span (Theo) - In.	315.72	9.472
Aspect Ratio	1.675	1.675
Rate of Taper	0.507	0.507
Taper Ratio	0.404	0.404
Sweep-Back Angles, Degrees.		
Leading Edge	45.000	45.000
Trailing Edge	26.25	26.25
0.25 Element Line	41.13	41.13
Chords:		
Root (Theo) WP	268.50	8.055
Tip (Theo) WP	108.47	3.254
MAC	199.81	5.994
Fus. Sta. of .25 MAC	1463.35	43.901
W.P. of .25 MAC	635.52	19.066
B.L. of .25 MAC	0.0	0.0
Airfoil Section		
Leading Wedge Angle - Deg.	10.0	10.0
Trailing Wedge Angle - Deg.	14.92	14.92
Leading Edge Radius	2.0	0.060
Void Area	13.17	0.0019
Blanketed Area	0.0	0.0

ORIGINAL PAGE IS
OF POOR QUALITY

TABLE III (Conl'd)

MODEL COMPONENT: WING-W_{116}

GENERAL DESCRIPTION: Configuration 4

NOTE: Identical to W_{111} except airfoil thickness. Dihedral angle is along trailing edge of wing.

MODEL SCALE: 0.030

TEST NO. DWG. NO. VL70-000140A, -000200

DIMENSIONS:	FULL-SCALE	MODEL SCALE
TOTAL DATA		
Area (Theo.) Ft^2		
Planform	2690.00	2.421
Span (Theo In.	936.68	28.10
Aspect Ratio	2.265	2.265
Rate of Taper	1.177	1.177
Taper Ratio	0.200	0.200
Dihedral Angle, degrees	3.500	3.500
Incidence Angle, degrees	0.500	0.500
Aerodynamic Twist, degrees		
Sweep Back Angles, degrees		
Leading Edge	45.000	45.000
Trailing Edge	- 10.056	- 10.056
0.25 Element Line	35.209	35.209
Chords:		
Root (Theo) B.P.O.O.	689.24	20.677
Tip, (Theo) B.P.	137.85	4.136
MAC	474.81	14.244
Fus. Sta. of .25 MAC	1136.83	34.105
W.P. of .25 MAC	290.58	8.717
B.L. of .25 MAC	182.13	5.464
EXPOSED DATA		
Area (Theo) Ft^2	1751.50	1.576
Span, (Theo) In. BP108	720.68	21.620
Aspect Ratio	2.059	2.059
Taper Ratio	0.245	0.245
Chords		
Root BP108	562.09	16.863
Tip 1.00 $\frac{b}{2}$	137.85	4.136
MAC	392.83	11.785
Fus. Sta. of .25 MAC	1185.98	35.579
W.P. of .25 MAC	295.30	8.829
B.L. of .25 MAC	251.77	7.555
Airfoil Section (Rockwell Mod NASA) XXXX-64		
Root $\frac{b}{2}$ =	0.113	0.113
Tip $\frac{b}{2}$ =	0.120	0.120
Data for (1) of (2) Sides		
Leading Edge Cuff		
Planform Area Ft^2	113.18	0.102
Leading Edge Intersects Fus M. L. @ Sta	500.0	15.0
Leading Edge Intersects Wing @ Sta	1025.0	30.720

TABLE IV.

FUSELAGE PRESSURE TAP LOCATIONS –

ORBITER – IN.			Φ RADIAL LOCATION ~ DEGREES																				
FULL	MODEL	X_o/L_o	0	20	40	55	70	90	105	110	120	135	140	150	151	156	162	165	169	174	180	No TAPS	Σ ab TAPS
235	7.05	0	7																			1	1
245	7.35	.008	8					9													10	3	4
265	7.95	.023	11	12	13	14	15	16			17			18							19	9	13
295	8.85	.046		24	25	26	27	28			29			30							31	8	21
325	9.75	.070		36	37	38	39	40			41			42							43	8	29
330	11.40	.112	47	48	49	50	51	52			53			54							55	9	38
440	13.20	.158																		59		1	39
450	13.50	.166	60	61	62	63	64	65			66			67					68		69	10	49
465	13.95	.177													73		74					2	51
500	15.00	.204	75	76	77	78	79	80			81		82	83				84			85	11	62
560	16.80	.251	89		90		91	92			93			94				95			96	8	70
625	18.75	.301	98		99		100	101			102			103				104			105	8	78
725	21.75	.378	107		108		109	110			111			112				113			114	8	86
880	26.40	.497	116		117		118	119			120			121				122			123	8	94
980	29.40	.574	125		126																	2	96
1080	32.40	.652	128		129		130	131			132			133				134			135	8	104
1180	35.40	.729	137		138		139	140			141			142							143	7	111

TABLE IV. - Concluded.

FUSELAGE PRESSURE TAP LOCATIONS

ORBITER-IN.			Φ RADIAL LOCATION ~ DEGREES																							
FULL	MODEL	X/Lo	0	20	40	55	70	90	105	110	120	135	140	150	151	156	162	165	169	174	180	305	320	340	NO TAPS	Σ NO TAPS
1245	37.35	.779	145		146		147	148	149		150	151		152				153			154				10	10
1300	39.0	.821	156		157		158	159	160		161	162		163							164				9	19
1375	41.25	.879	166		167		168	169	170		171	172		173				174							9	28
1430	42.9	.921	176		177		178	179	180		181	182		183				184							9	37
1480	44.4	.960	186		187		188	189	190		191	192		193				194							9	46
1530	45.9	.999								196 198	197 199														4	50

TABLE V.

η	Y/b	LEFT WING PRESSURE TAP LOCATIONS																	No TAPS	Σ No TAPS
.235	110	X/C	0	.041	.113	.247	.429	.547	.633	.727	.793									9
		TOP	208	209	210	211	212	213	214	215	216								9	
		BOT	—	—	—	—	—	—	—	—	—								0	
.299	140	X/C	0	.010	.020	.050	.0944	.229	.362	.497		.700	.834	.865	.900	.965				34
		TOP	217	218	219	220	221	222	223	224		225	226	227	228	229			13	
		BOT		230	231	232	233	234	235	236		237	238	239	240	241			12	
.364	170	X/C	0	.010	.020	.040	.086	.163	.246	.390		.637	.798	.839	.879	.919	.955			61
		TOP	242	243	244	245	246	247	248	249		250	251	252	253	254	255		14	
		BOT		256	257	258	259	260	261	262		263	264	265	266	267	268		13	
.427	200	X/C	0	.010	.020	.040	.083	.177	.274	.402	.565	.760	.808	.857	.905	.953	1.00			89
		TOP	269	270	271	272	273	274	275	276	277	278	279	280	281	282			14	
		BOT		283	284	285	286	287	288	289	290	291	292	293	294	295	296		14	
.534	250	X/C	0	.010	.020	.050	.080	.150	.250	.400	.550	.725	.775	.850	.900	.950				116
		TOP	297	298	299	300	301	302	303	304	305	306	307	308	309	310			14	
		BOT		311	312	313	314	315	316	317	318	319	320	321	322	323			13	

TABLE V. - Concluded.

η	Y₀	LEFT WING PRESSURE TAP LOCATIONS																No TAPS	Σ No TAPS
.641	300	X/C	0	.010	.020	.050	.150	.250	.400	.550	.700	.775	.850	.920	1.00				123
		TOP										333	334	335				3	
		BOT										344	345	346	347			4	
.673	315	X/C	0	.010	.020	.050	.150	.250	.400	.550	.700	.775	.850	.920	1.00				140
		TOP	324	325	326	327	328	329	330	331	332							9	
		BOT		336	337	338	339	340	341	342	343							8	
.780	365	X/C	0	.010	.020	.050	.150	.250	.650	.750	.850	.950							159
		TOP	348	349	350	351	352	353	354	355	356	357						10	
		BOT		358	359	360	361	362	363	364	365	366						9	
.887	415	X/C	0	.010	.020	.050	.150	.250	.400	.600	.750	.900	1.0						179
		TOP	367	368	369	370	371	372	373	374	375	376						10	
		BOT		377	378	379	380	381	382	383	384	385	386					10	
.972	455	X/C	0	.020	.069	.157	.345	.503	.620	.862									194
		TOP	387	388	389	390	391	392	393	394								8	
		BOT		395	396	397	398	399	400	401								7	
1.0	462.3	X/C	.448	.723															196
		TOP	402	403														2	
		BOT																	

TABLE VI.

ORBITER VERTICAL TAIL & SPEED BRAKE

PRESSURE TAP LOCATIONS

VERTICAL (LH ONLY)		X/C_V											
Z_0 FULL SCALE	Z_0 MODEL SCALE	η_V	0	.025	.05	.15	.30	.52	.685	.775	.90	NO TAPS	Σ NO TAPS
550	16.5	.153	430	431	432	433	434	435	436	437		8	8
600	18.0	.316	438	439	440	441	442	443	444	445	446	9	17
645	19.35	.458							1444	1445	1446	3	20
690	20.70	.600	447	448	449	450	451	452	453	454	455	9	29
720	21.6	.720							1453	1454	1455	3	32
765	22.95	.820	456	457	458	459	460	461	462	463	464	9	41
792	23.76	.925	465	466	467	468	469	470	471	472	473	9	50

SPEED BRAKE (R H INSIDE)		X/SB_V							
Z_0 FULL SCALE	Z_0 MODEL SCALE	η/SB	.10	.25	.40	.65	.90	NO TAPS	Σ NO TAPS
600	18.0	.110	801	802	803	804	805	5	5
630	18.9	.254	806	807	808	809	810	5	10
666	19.8	.407	811	812	813	814	815	5	15
690	20.7	.567	816	817	818	819	820	5	20
720	21.6	.706	821	822	823	824	825	5	25
750	22.5	.856	826	827	828	829	830	5	30

TABLE VII.

BODYFLAP PRESSURE TAP LOCATIONS

ORBITER-X_o			ϕ - DEGREES			
FULL SCALE	MODEL SCALE	X_o/L_o	0	40	No. TAPS	Σ No. TAPS
1555 U	46.65	1.018	200	201	2	2
1555 L	46.65	1.018	202	203	2	4
1590 U	47.70	1.046	204	205	2	6
1590 L	47.70	1.046	206	207	2	8

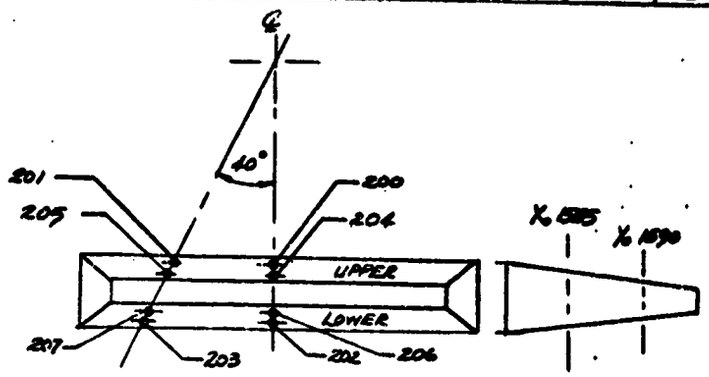

LOOKING FORWARD.

ORIGINAL PAGE IS
OF POOR QUALITY

Notes:

1. Positive directions of force coefficients, moment coefficients, and angles are indicated by arrows
2. For clarity, origins of wind and stability axes have been displaced from the center of gravity

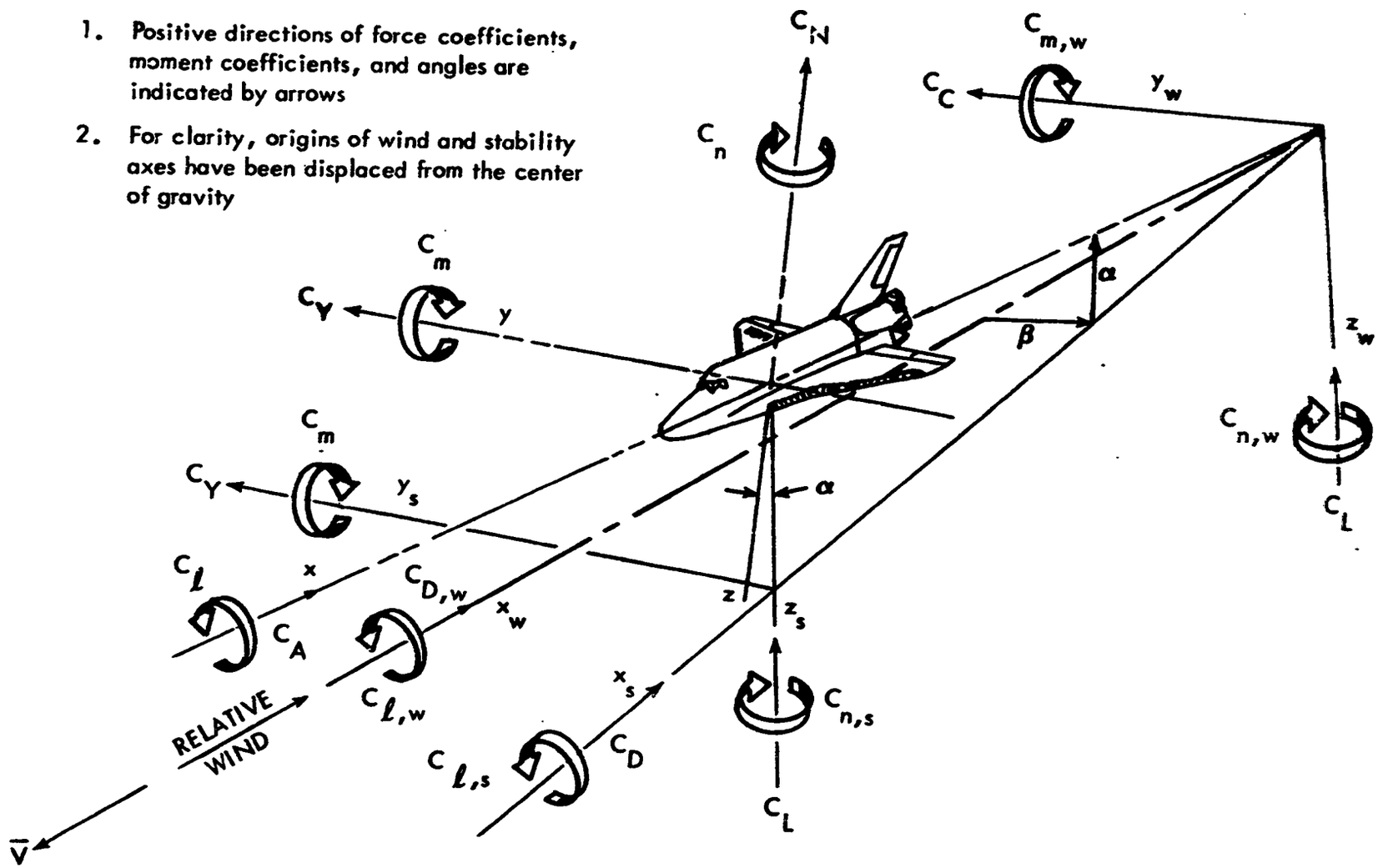

a. Orbiter Axis Systems

Figure 1. - Axis systems and sign conventions

RUDDER AND SPEED BRAKE DEFLECTIONS
(PARALLEL TO THE FRL)

	Maximum Deflections	
	Vehicle [illegible]	Test CA148
δ_r	22.8	± 10
δ_{sb}	87.2	85
δ_e	-35/+20	± 10
δ_{BF}	-11.7/+22.5	-11.7 /+22.5

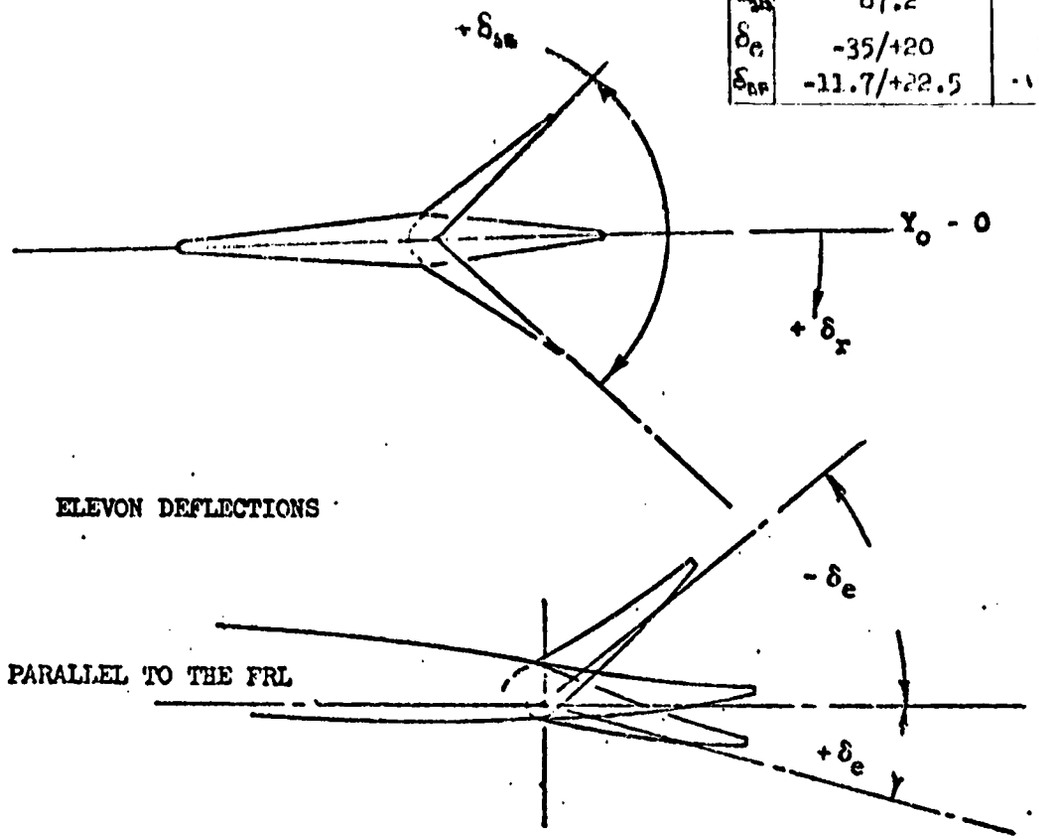

BODY FLAP DEFLECTIONS

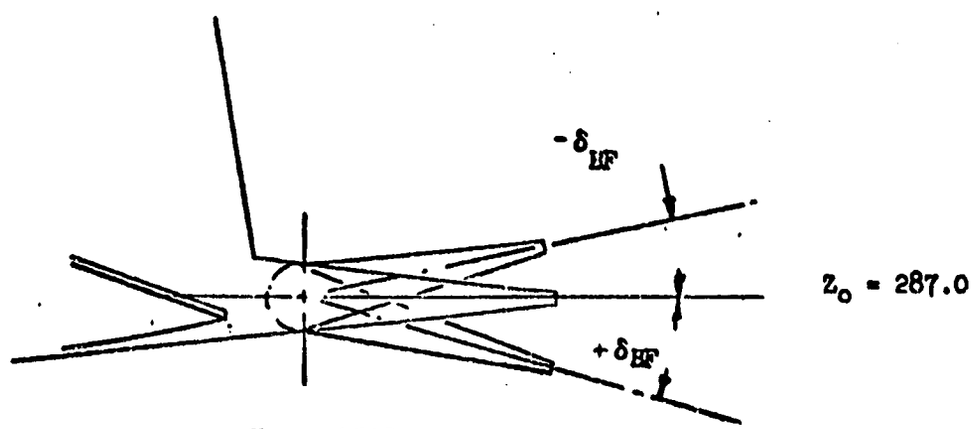

X_o = 1532

b. Definition of Angular Measurements

Figure 1. - Continued.

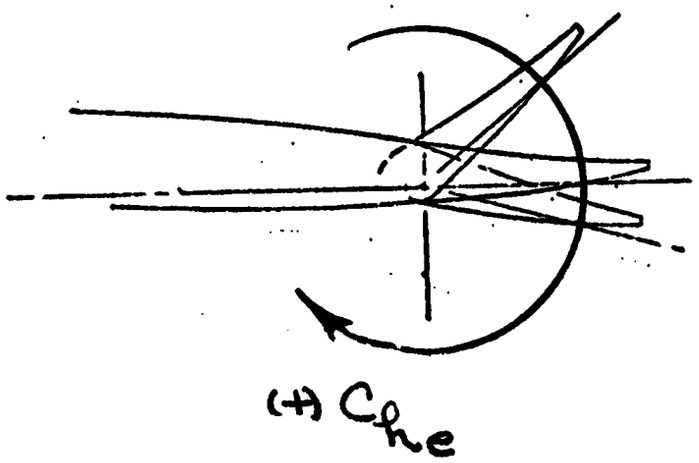

ORIGINAL PAGE IS
OF POOR QUALITY

c. Elevon Hinge Moment Sign Convention

Figure 1. - Concluded.

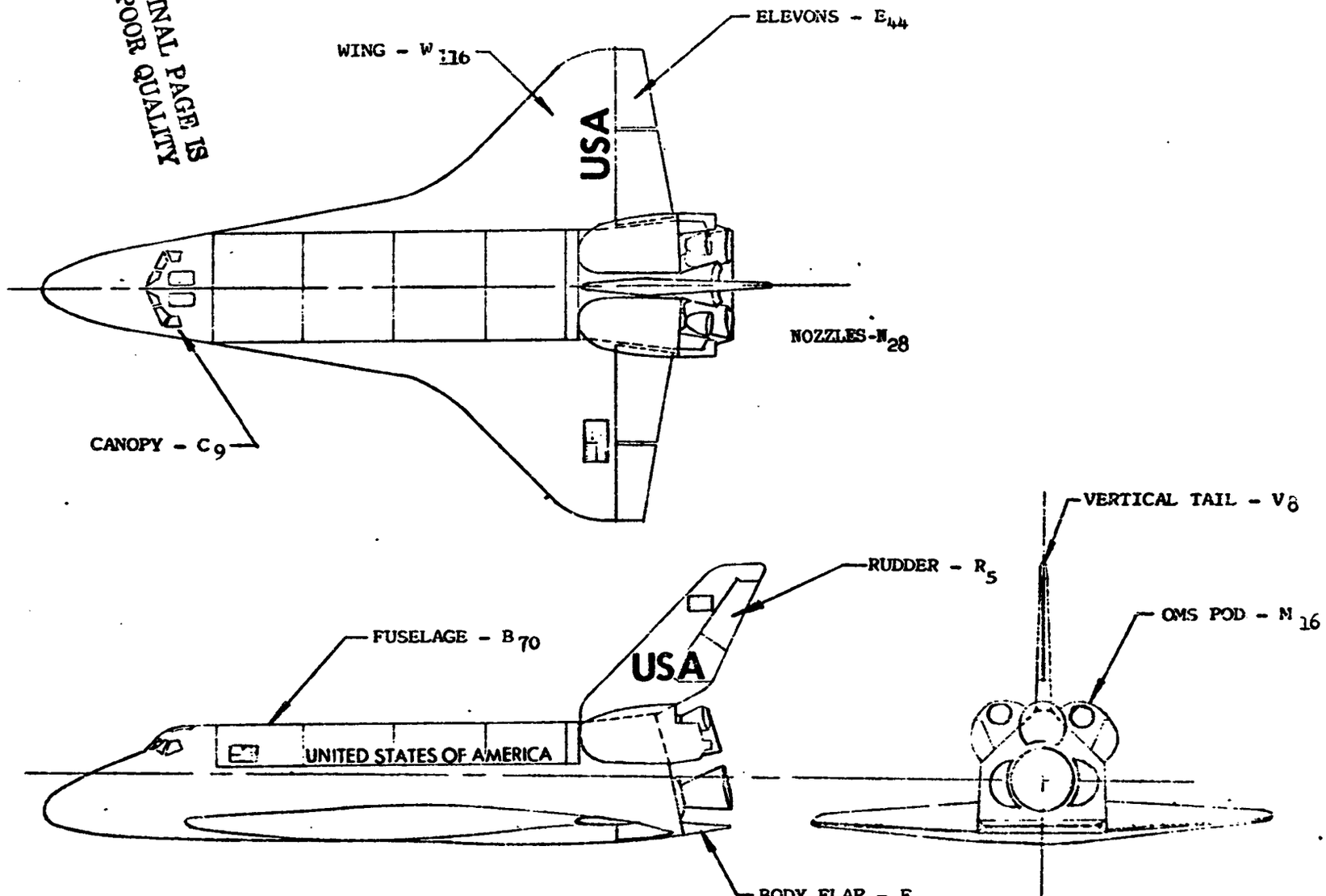

a. Configuration - 140A/B/C/R

Figure 2. - Model sketches.

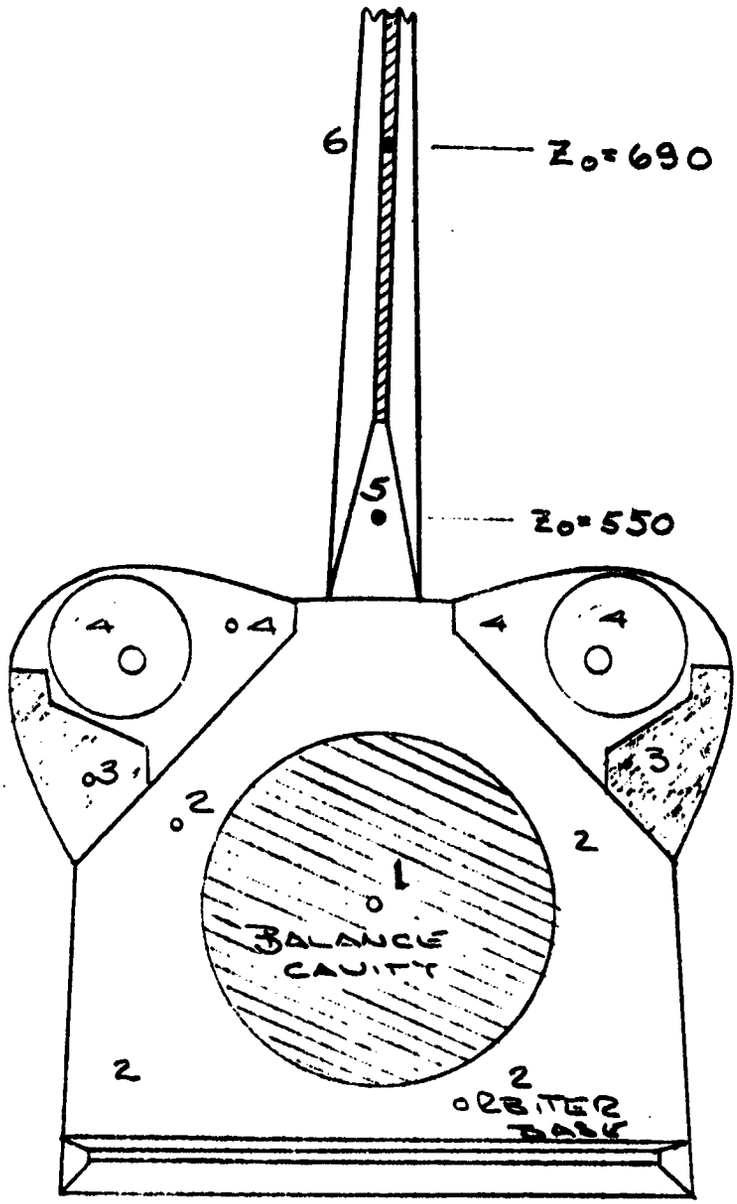

AREA NO.	PROJECTED AXIAL VALUE
A1	0.076699 ft²
A2	0.215695 ft²
A3	0.034072 ft²
A4	0.074167 ft²

b. Base Pressure Taps and Areas

Figure 2. - Continued.

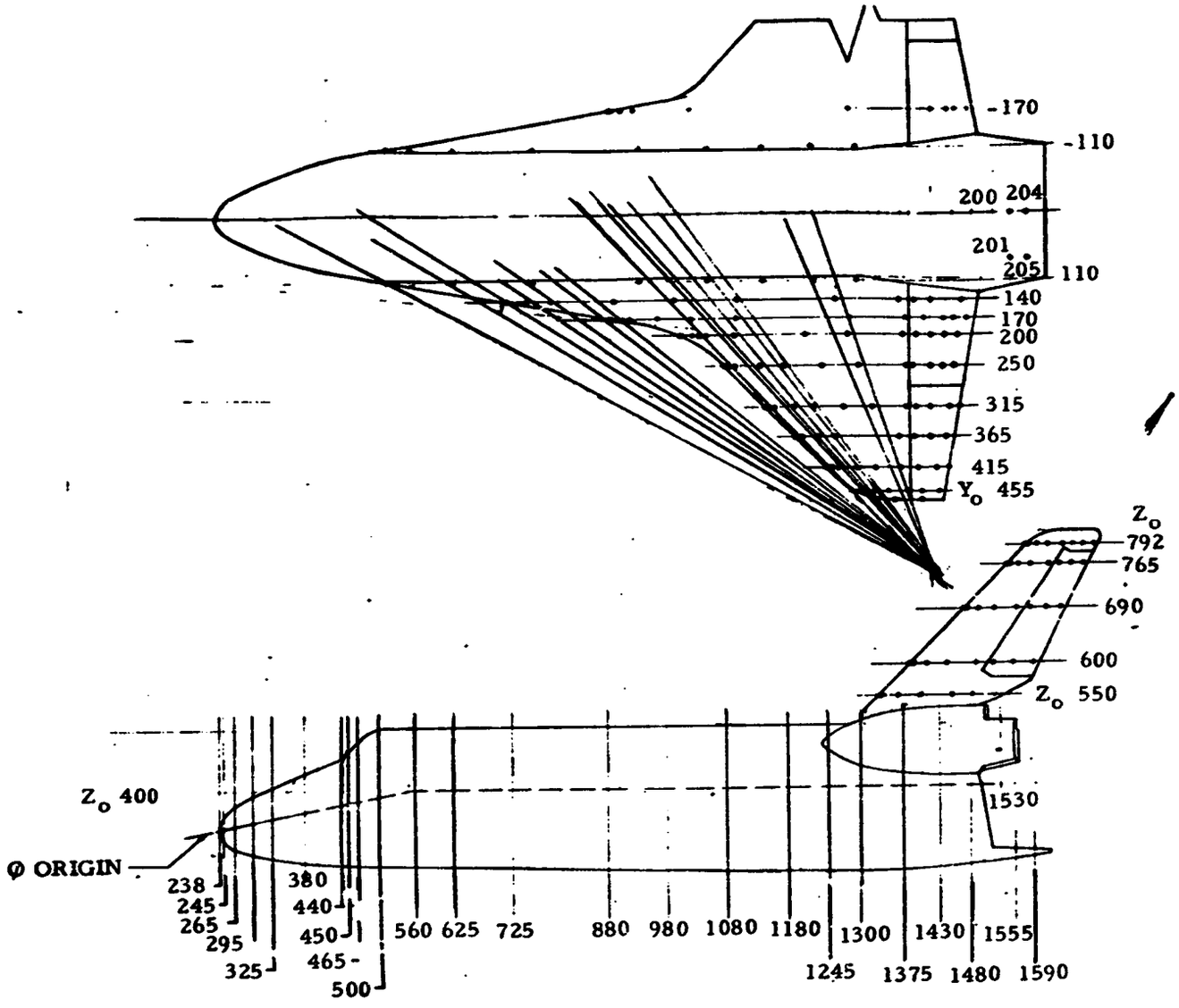

c. Fuselage, Vertical Tail, and Wing Pressure Tap Locations
Figure 2. - Continued.

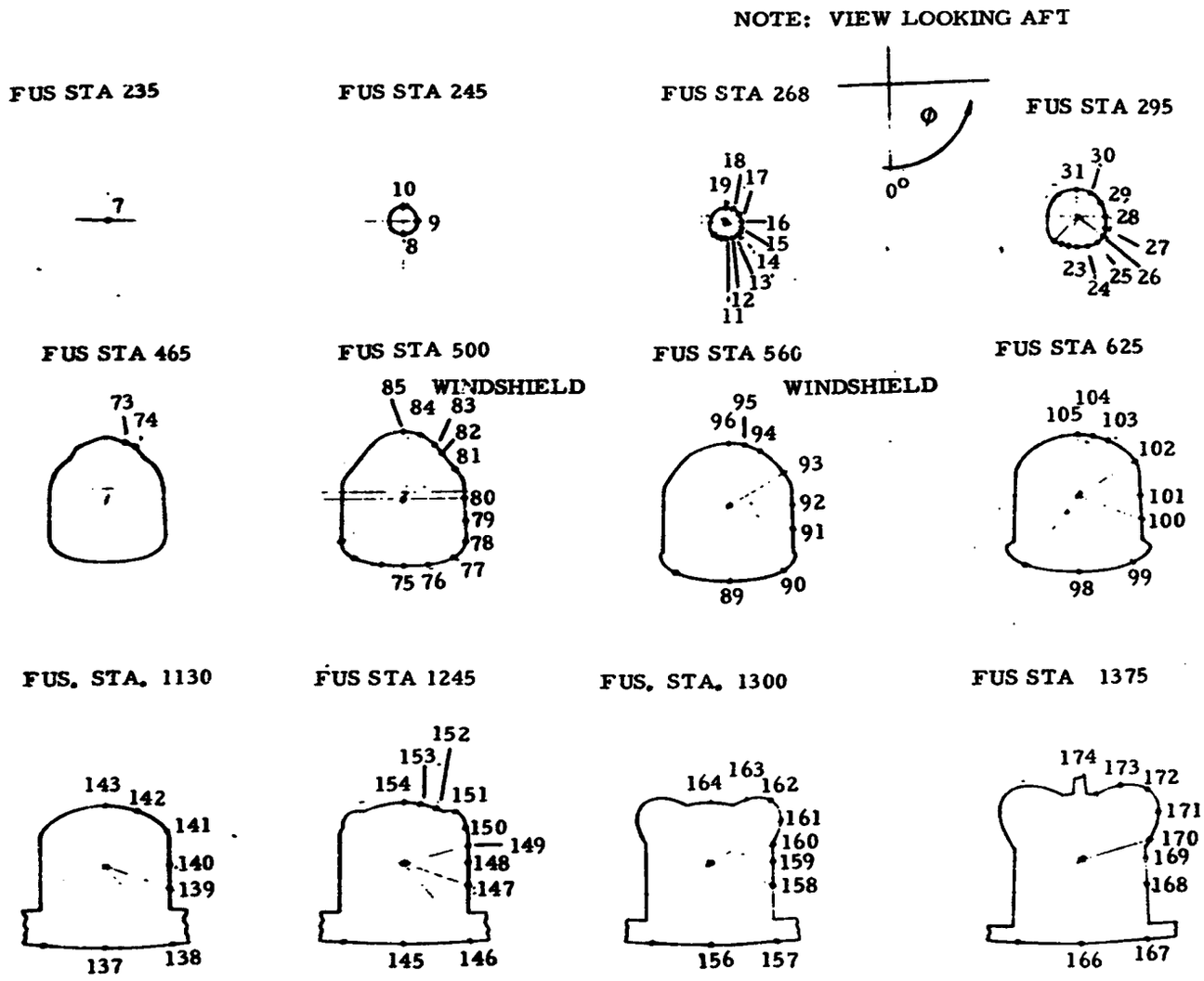

c. Fuselage, Vertical Tail, and Wing Pressure Tap Locations
Figure 2. - Continued.

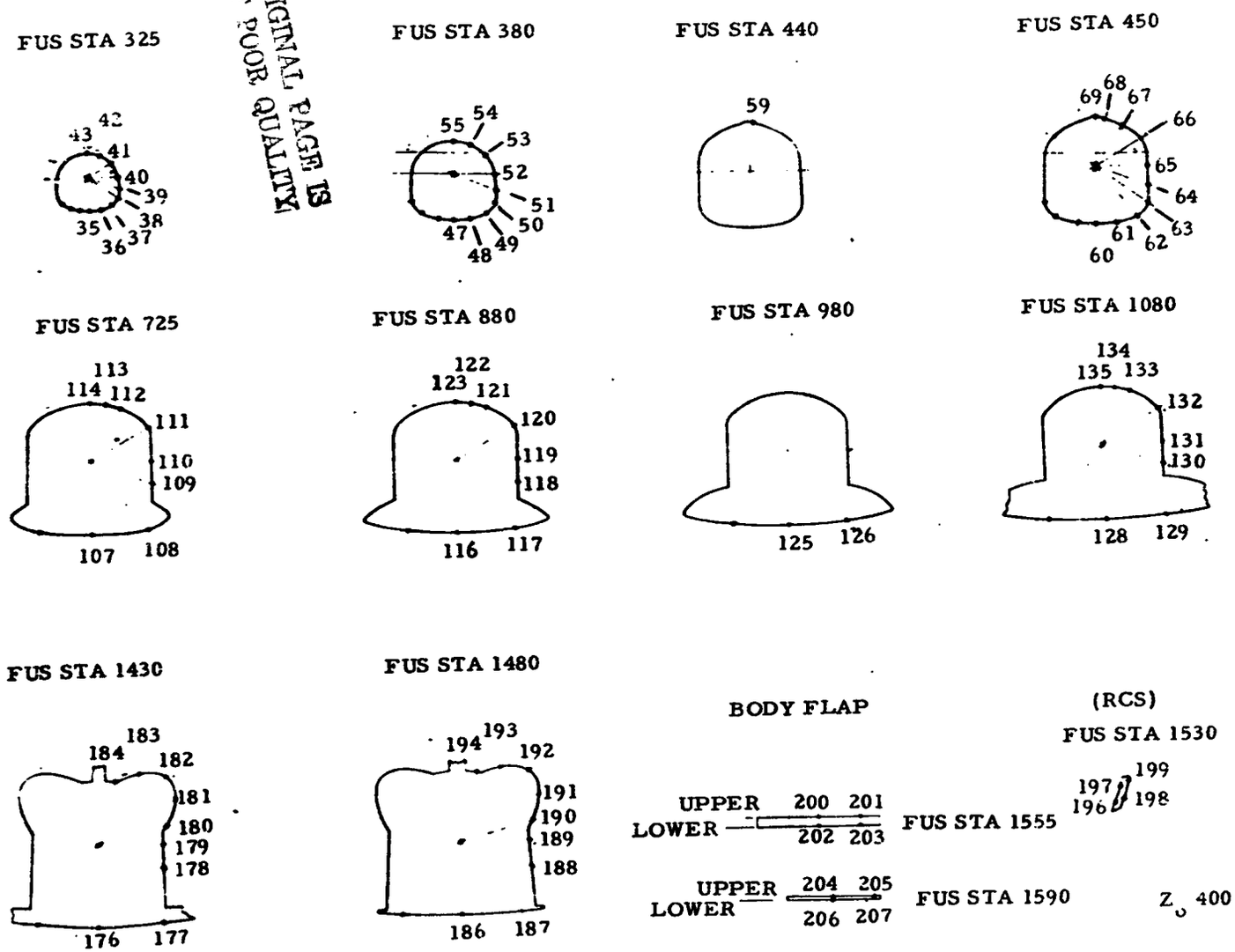

c. Fuselage, Vertical Tail, and Wing Pressure Tap Locations
Figure 2. - Continued.

PRESSURE ORIFICE LOCATION OF LEFT WING PANEL

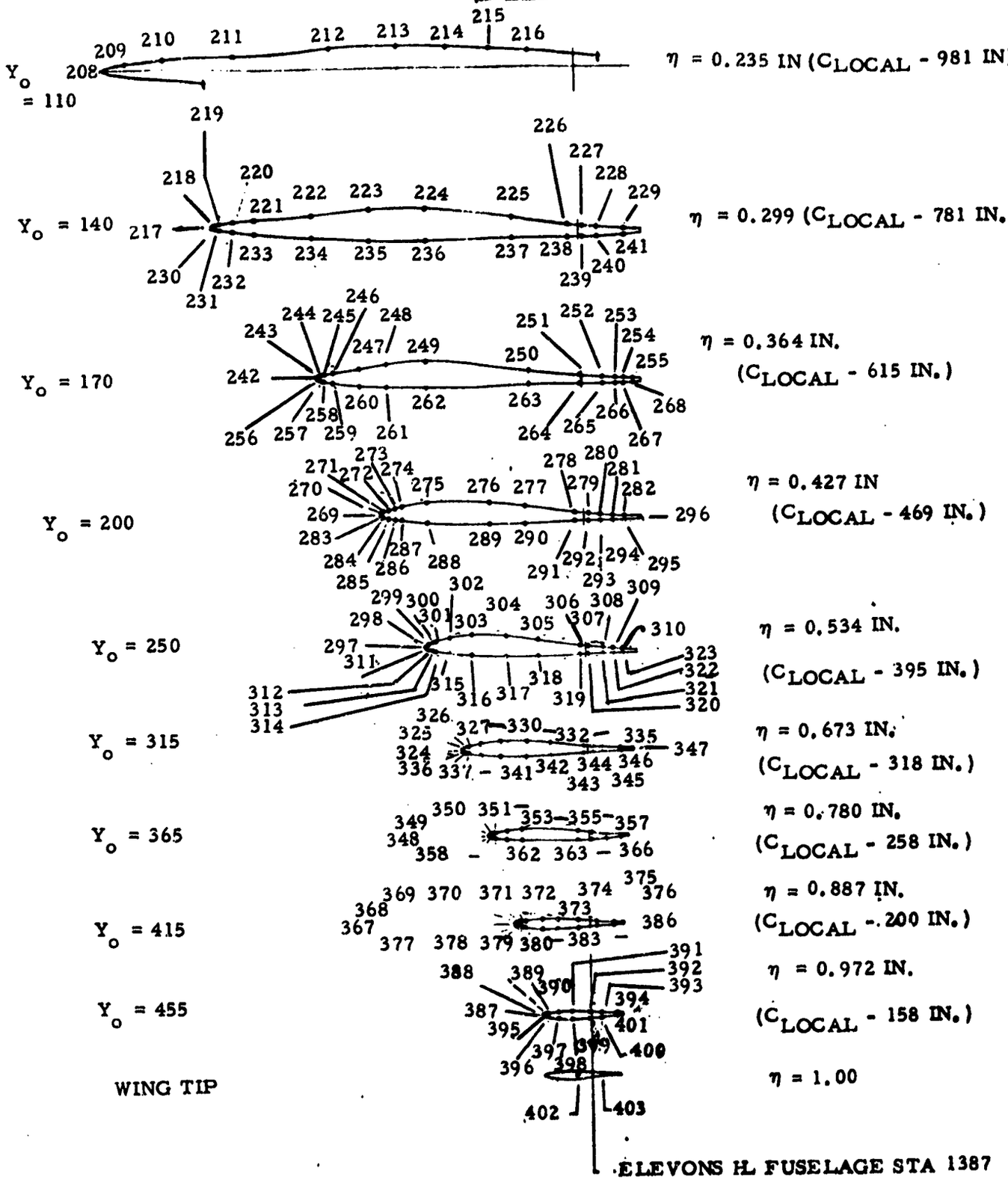

c. Fuselage, Vertical Tail, and Wing Pressure Tap Locations
Figure 2. - Continued.

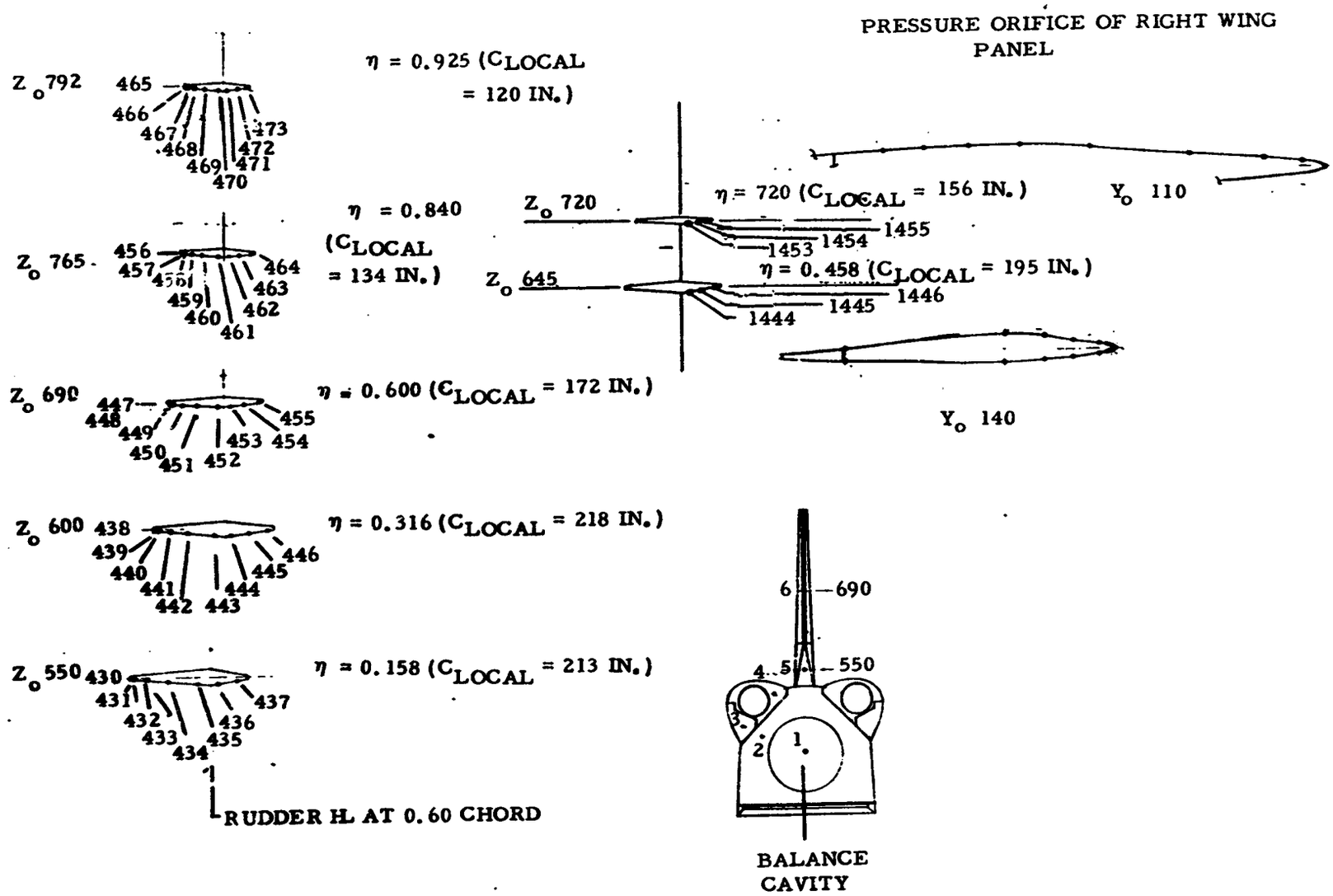

c. Fuselage, Vertical Tail, and Wing Pressure Tap Locations

Figure 2. - Concluded.

a. Three Quarter Front View of model 47-0 in the ARC 11 x 11 UPWT

Figure 3. - Model installation photographs.

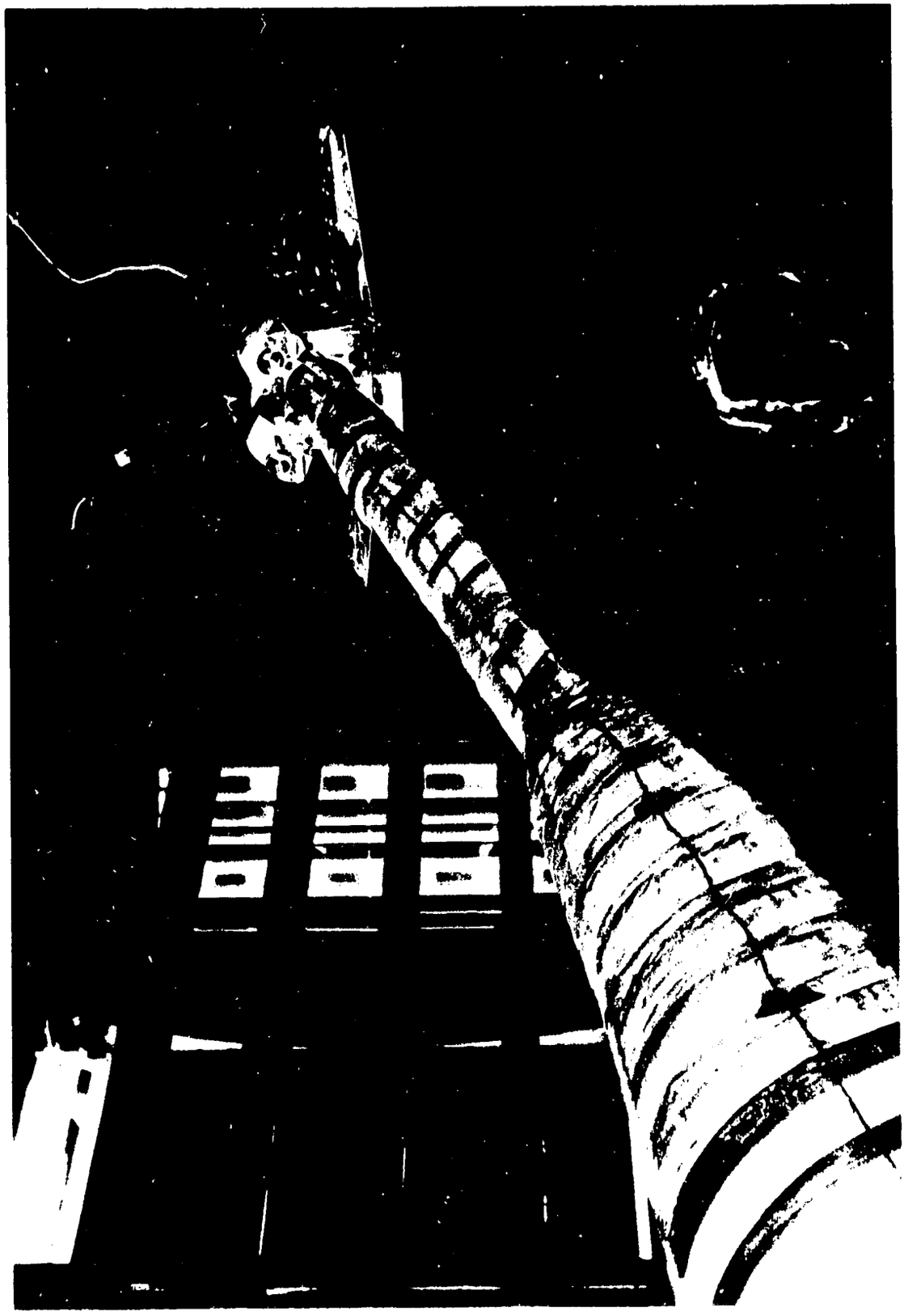

b. Three Quarter Rear View of Model 47-O in the ARC 11 x 11 UPWT

Figure 3. - Concluded.

(Reverse of this page is blank.)

APPENDIX

VOLUME NO.		CONTENTS	PAGES
3		TABULATED FORCE DATA	1-723
		TABULATED PRESSURE DATA	
		COMPONENT	
4, 5		Orbiter fuselage	1-1270
6, 7, 8	(Note)	Lower wing	1271-3146
9, 10, 11	(Note)	Upper wing	3147- 5404
12		Upper body flap	5405-5773
12		Lower body flap	5774-6142
13		Speed brake	6143-6546
13		Vertical tail	6547-7114

Note: Data tabulated at 2Y/BW = .673, X/CW = .775, .850, .950 & 1.00 were actually located at 2Y/BW = .641, X/CW = .775, .850, .950 & 1.00 as shown in Table V on page 47.

AMES 11-073(OA148) -140A/B/C/R ORB LEFT WING TOP (XEBU58) (05 AUG 75)

REFERENCE DATA

SREF = 2690.0000 SQ.FT. XMRP = 1076.6800 IN. XO
LREF = 474.8000 IN. YMRP = .0000 IN YO
BREF = 936.0000 IN. ZMRP = 375.0000 IN. ZO
SCALE = .0300

PARAMETRIC DATA

RUDDER = 10.000 SPDBRK = 55.000
BDFLAP = 16.300 L-ELVN = 4.000
R-ELVN = -4.000 MACH = 1.250

ALPHA (1) = -4.015 BETA (1) = -3.834 MACH = 1.2474 Q = 600.07 P = 550.87 RN/L = 3.0101

SECTION (1)LEFT WING TOP SURF DEPENDENT VARIABLE CP

2Y/BW	.2350	.2990	.3640	.4270	.5340	.6730	.7600	.8870	.9720	1.0000
X/CW										
.000	-.1958	-.0801	-.1136	.2716	.6617	.6024	.5580	.5815	-.4243	
.010		-.0282	-.0078		.7264	.7048	.6708	.5945		
.020		.0335		.0000	.6462	.6048	.5784	.5507	-.0477	
.040			.0471	.4180						
.041	-.0990									
.050					.4411	.3936	.3774	.3677		
.069									-.1067	
.080					.2584					
.081				.3038						
.086			.1664							
.094		-.0031								
.113	-.0566									
.150					.0195	.0146	.0414	.0509		
.157									-.2471	
.163			.0000							
.177				.1034						
.229		.0577								
.246			.0990							
.247	-.0022									
.250					-.1256	-.1376	-.1309	-.1529		
.274				-.0430						
.345									-.2931	
.362		.1562								
.390			-.0199							
.400					-.2600	-.3097		-.3783		
.402				-.2008						
.418										-.5031
.429	.0499									
.497		.0205								
.503									-.3367	
.547	.0760									
.550					-.1885	-.3583				
.565				.0102						
.600								-.4517		
.633	-.0465									
.637			.1500							
.650							-.4255			
.670									-.4885	

AMES 11-073(OA148) -140A/B/C/R ORB LEFT WING TOP (XE8U58)

ALPHA (1) = -4.015 BETA (1) = -3.834

SECTION (1)LEFT WING TOP SURF DEPENDENT VARIABLE CP

2Y/BW	.2350	.2990	.3640	.4270	.5340	.6730	.7800	.8870	.9720	1.0000
X/CW										
.700		.1226				-.1227				
.723										-.4463
.725					.0618					
.727	-.0623									
.750							-.3956	-.4960		
.760				.0535						
.775					-.0383	-.1099				
.793	.3445									
.798			.0556							
.808				-.0305						
.834		.0911								
.839			-.0279							
.850					-.0250	-.0845	-.1958			
.857				-.0535						
.862									-.4134	
.865		-.1322								
.879			-.0352							
.900		-.0024			-.0856			-.2313		
.905				-.0437						
.919			-.0539							
.950					-.0596	-.0278	.0413			
.953				-.0497						
.955			-.0513							
.965		-.0022								

ALPHA (1) = -4.012 BETA (2) = .202 MACH = 1.2474 Q = 600.07 P = 550.87 RN/L = 3.0101

SECTION (1)LEFT WING TOP SURF DEPENDENT VARIABLE CP

2Y/BW	.2350	.2990	.3640	.4270	.5340	.6730	.7800	.8870	.9720	1.0000
X/CW										
.002	-.2181	-.0787	-.0687	.2373	.5952	.5154	.4606	.4809	-.5031	
.010		-.0646	-.0111		.6520	.6231	.5850	.5203		
.020		-.0790		.0000	.5791	.5318	.5081	.4804	-.1288	
.040			.0300	.3530						
.041	-.1706									
.050					.3918	.3433	.3230	.3202		
.069									-.1723	
.080					.2257					
.081				.2496						
.086			.1321							
.094		-.0251								
.113	-.1167									
.150					.0148	-.0043	.0186	.0341		

AMES 11-073(OA148) -140A/B/C/R ORB LEFT WING TOP (XEBU58)

ALPHA (1) = -4.012 BETA (2) = .202

SECTION (1)LEFT WING TOP SURF DEPENDENT VARIABLE CP

2Y/BW	.2350	.2990	.3640	.4270	.5340	.6730	.7800	.8870	.9720	1.0000
X/CW										
.157									-.3034	
.163			.0000							
.177				.0919						
.229		.0304								
.246			.0771							
.247	-.0215									
.250					-.1201	-.1526	-.1497	-.1682		
.274				-.0358						
.345									-.3254	
.352		.1399								
.390			-.0273							
.400					-.2468	-.2973		-.3872		
.402				-.1898						
.418										-.5813
.429	.0335									
.497		-.0045								
.503									-.3575	
.547	.0543									
.550					.0127	-.3292				
.565				.1200						
.590								-.4409		
.633	-.0513									
.637			.1963							
.650							-.3626			
.670									-.4830	
.700		.1914				-.0334				
.723										-.5194
.725					.0830					
.727	.0974									
.750							-.1606	-.4567		
.760				.0355						
.775					-.0814	-.1083				
.793	.3438									
.799			.0300							
.809				-.0698						
.834		.0607								
.839			-.0708							
.850					-.0600	-.1164	-.0906			
.857				-.0961						
.862									-.2812	
.865		-.1652								
.879			-.0812							
.900		-.0439			-.1185			-.1540		
.905				-.0938						
.915			-.0951							

AMES 11-073(OA148) -140A/B/C/R ORB LEFT WING TOP (XEBU58)

ALPHA (1) = -4.012 BETA (2) = .202

SECTION (1)LEFT WING TOP SURF DEPENDENT VARIABLE CP

2Y/BW	.2350	.2990	.3640	.4270	.5340	.6730	.7800	.8870	.9720	1.0000
X/CW										
.950					-.1114	-.0710	.0240			
.953				-.0895						
.955			-.0963							
.965		-.0606								

ALPHA (1) = -4.007 BETA (3) = 4.280 MACH = 1.2474 Q = 600.07 P = 550.87 RN/L = 3.0101

SECTION (1)LEFT WING TOP SURF DEPENDENT VARIABLE CP

2Y/BW	.2350	.2990	.3640	.4270	.5340	.6730	.7800	.8870	.9720	1.0000
X/CW										
.000	-.2019	-.0981	-.0372	.2521	.5335	.4340	.3779	.3924	-.5576	
.010		-.1067	-.0041		.5769	.5383	.5009	.4384		
.020		-.1216		.0000	.5101	.4563	.4293	.4052	-.2098	
.040			.0288	.3049						
.041	-.2137									
.050					.3416	.2816	.2608	.2557		
.069									-.2425	
.080					.1854					
.081				.2152						
.086			.1131							
.094		-.0378								
.113	-.1671									
.150					-.0046	-.0291	-.0037	.0008		
.157									-.3574	
.163			.0000							
.177				.0771						
.229		.0136								
.246			.0743							
.247	-.0192									
.250					-.1289	-.1701	-.1825	-.2006		
.274				-.0442						
.345									-.3631	
.362		.1367								
.390			-.0369							
.400					-.2459	-.2915		-.3968		
.402				-.1902						
.418										-.6294
.429	.0402									
.497		-.0266								
.504										
.547	.0487								-.3690	
.550					.0783	-.0495				
.565				.1653						

AMES 11-073(OA148) -140A/B/C/R ORB LEFT WING TOP (XE8U58)

ALPHA (1) = -4.007 BETA (3) = 4.280

SECTION (1)LEFT WING TOP SURF DEPENDENT VARIABLE CP

2Y/BW	.2350	.2990	.3640	.4270	.5340	.6730	.7800	.8870	.9720	1.0000
X/CW										
.600										
.633	-.0710							-.4376		
.637			.2110							
.650							-.1099			
.670									-.4299	
.700		.2090				.0209				
.723										-.4295
.725					.0776					
.727	.1254									
.750										
.760							-.1185	-.2169		
.775				.0139						
.793	.3382				-.1102	-.1246				
.798			.0097							
.808				-.1003						
.834		.0420								
.839			-.1029							
.850					-.0899	-.1424	-.0974			
.857				-.1295						
.862										
.865		-.1902							-.1160	
.879			-.1230							
.900		-.0782			-.1424			-.0082		
.905				-.1349						
.919			-.1284							
.950					-.1466	-.1092	-.0134			
.953				-.121[illegible]						
.955			-.1346							
.965		-.1105								

ALPHA (2) = .035 BETA (1) = -3.858 MACH = 1.2470 Q = 599.89 P = 551.11 RN/L = 3.0093

SECTION (1)LEFT WING TOP SURF DEPENDENT VARIABLE CP

2Y/BW	.2350	.2990	.3640	.4270	.5340	.6730	.7800	.8870	.9720	1.0000
X/CW										
.000	-.0848	.0136	.0054	.4188	.7183	.6677	.6320	.6466	-.2392	
.010		-.0029	.0345		.5731	.6045	.5669	.4705		
.020		-.0271		.0000	.4648	.4576	.4392	.4153	-.0558	
.040			.0525	.2513						
.041	-.0812									
.050					.2349	.2092	.2035	.2013		
.069									-.1307	
.080					.0471					

AMES 11-073(OA148) -140A/B/C/R ORB LEFT WING TOP (XE8U58)

ALPHA (2) = .035 BETA (1) = -3.858

SECTION (1)LEFT WING TOP SURF DEPENDENT VARIABLE CP

2Y/BW	.2350	.2990	.3640	.4270	.5340	.6730	.7800	.8870	.9720	1.0000
X/CW										
.081				.1222						
.095			.1130							
.094		-.0870								
.113	-.0597									
.150					-.1564	-.1486	-.1215	-.1053		
.157									-.3119	
.153			.0000							
.177				-.0705						
.229		-.0063								
.246			-.0238							
.247	-.0744									
.250					-.2689	-.3183	-.3096	-.2975		
.274				-.1873						
.345									-.3741	
.362		.0808								
.390			-.1511							
.400					-.3757	-.4458		-.4909		
.402				-.3237						
.418										-.3547
.429	.0080									
.497		-.0919								
.503									-.4312	
.547	-.0015									
.550					-.3955	-.4832				
.565				-.2999						
.600								-.5165		
.633	-.1423									
.637			-.1771							
.650							-.5237			
.670									-.5717	
.700		-.2098				-.4017				
.723										-.2784
.725					-.1193					
.727	-.2111									
.750							-.4761	-.4973		
.760				-.0556						
.775					-.1167	-.2266				
.793	.1745									
.799			-.0298							
.808				-.0331						
.834		.0356								
.829			-.0435							
.850					-.0535	-.1913	-.3330			
.857				-.0564						
.942									-.5411	

AMES 11-073(OA148) -140A/B/C/R ORB LEFT WING TOP (XE8U58)

ALPHA (2) = .035 BETA (1) = -3.059

SECTION (1)LEFT WING TOP SURF DEPENDENT VARIABLE CP

2Y/BW	.2350	.2990	.3640	.4270	.5340	.6730	.7800	.8870	.9720	1.0000
X/CW										
.865		-.1509								
.879			-.0509							
.900		-.0396			-.0895			-.2835		
.905				-.0625						
.919			-.0551							
.950					-.0501	-.0597	-.2555			
.953				-.0687						
.955			-.0636							
.965		-.0477								

ALPHA (2) = .040 BETA (2) = .189 MACH = 1.2470 Q = 599.89 P = 551.11 RN/L = 3.0093

SECTION (1)LEFT WING TOP SURF DEPENDENT VARIABLE CP

2Y/BW	.2350	.2990	.3640	.4270	.5340	.6730	.7800	.8870	.9720	1.0000
X/CW										
.000	-.0986	-.0573	-.0236	.3707	.6410	.5803	.5430	.5490	-.2957	
.010		-.0909	-.0021		.4870	.5176	.4804	.3899		
.020		-.1157		.0000	.3891	.3811	.3650	.3378	-.1284	
.040			.0156	.1792						
.041	-.1497									
.050					.1849	.1506	.1501	.1430		
.059									-.1958	
.060					.0132					
.081				.0726						
.085			.0700							
.099		-.1347								
.113	-.1353									
.150					-.1680	-.1755	-.1873	-.1356		
.157									-.3539	
.163			.0000							
.177				-.0770						
.229		-.0209								
.246			-.0374							
.247	-.1164									
.250					-.2698	-.3205	-.3237	-.3174		
.274				-.1772						
.345									-.3950	
.362		.0567								
.390			-.1447							
.400					-.3637	-.4421		-.4990		
.402				-.3242						
.418										-.1726
.429	-.0043									

AMES 11-073(OA148) -140A/B/C/R ORB LEFT WING TOP (XEBU58)

ALPHA (2) = .040 BETA (2) = .189

SECTION (1)LEFT WING TOP SURF DEPENDENT VARIABLE CP

2Y/BW	.2350	.2990	.3640	.4270	.5340	.6730	7800	.8870	.9.L0	1.0000
X/CW										
.497		-.1108								
.503									-.4296	
.547	-.0187									
.550					-.3736	-.4584				
.565				-.2249						
.600								-.5260		
.633	-.1629									
.637			-.0327							
.650							-.5292			
.670									-.5540	
.700		-.0824				-.2304				
.723										-.3637
.725					-.1015					
.727	-.1888									
.750							-.4634	-.4617		
.760				-.0607						
.775					-.1071	-.2308				
.793	.2127									
.798			-.0417							
.808				-.0890						
.834		-.0036								
.839			-.1062							
.850					-.0748	-.1707	-.3112			
.857				-.1117						
.862									-.3898	
.865		-.1971								
.879			-.1062							
.900		-.0909			-.1260			-.2585		
.905				-.1080						
.919			-.1109							
.950					-.1104	-.0465	-.2186			
.953				-.1077						
.955			-.1081							
.965		-.1153								

AMES 11-073(OA148) -140A/B/C/R ORB LEFT WING TOP (XE8U5B)

ALPHA (2) = .037 BETA (3) = 4.261 MACH = 1.2470 Q = 599.89 P = 551.11 RN/L = 3.0093

SECTION (1)LEFT WING TOP SURF DEPENDENT VARIABLE CP

2Y/BW	.2350	.2990	.3640	.4270	.5340	.6730	.7800	.8870	.9720	1.0000
X/CW										
.000	-.1118	-.1534	-.0836	.3232	.5758	.5052	.4609	.4617	-.2094	
.010		-.1923	-.0566		.4009	.4248	.3855	.3023		
.020		-.1980		.0000	.3137	.2966	.2777	.2518	-.1762	
.040			-.0147	.1377						
.041	-.1931									
.050					1273	.0925	.0818	.0733		
.069									-.2339	
.080					-.0251					
.091				.0460						
.086			.0443							
.094		-.1518								
.113	-.1921									
.150					-.1838	-.2133	-.1989	-.1762		
.157									-.3804	
.163			.0000							
.177				-.0736						
.223		-.0354								
.246			-.0355							
.247	-.1225									
.250					-.2749	-.3288	-.3398	-.3479		
.274				-.1734						
.345									-.4049	
.362		.0656								
.390			-.1474							
.400					-.3605	-.4349		-.5119		
.402				-.3181						
.418										-.2142
.429	.0005									
.437		-.1172								
.503									-.4393	
.547	-.0169									
.550					-.2432	-.4487				
.566				-.0893						
.600								-.5371		
.652	-.1725									
.657			.2141							
.650							-.5145			
.670									-.5529	
.700		-.0050				-.2033				
.723										-.5199
.725					-.0587					
.737	-.1214									
.750							-.3675	-.3796		
.762				-.0658						
.775					-.1291	-.1779				

AMES 11-073(OA148) -140A/B/C/R ORB LEFT WING TOP (XE8U58)

ALPHA (2) = .037 BETA (3) = 4.261

SECTION (1)LEFT WING TOP SURF DEPENDENT VARIABLE CP

2Y/BW	.2350	.2990	.3640	.4270	.5340	.6730	.7800	.8870	.9720	1.0000
X/CW										
.793	.2145									
.796			-.0565							
.808				-.1300						
.834		-.0249								
.839			-.1474							
.850					-.1036	-.1513	-.2227			
.857				-.1551						
.862									-.2955	
.865		-.2258								
.879			-.1438							
.900		-.1243			-.1571			-.2125		
.905				-.1549						
.919			-.1502							
.950					-.1559	-.0749	-.0942			
.953				-.1435						
.955			-.1512							
.965		-.1622								

ALPHA (3) = 3.928 BETA (1) = -3.861 MACH = 1.2467 Q = 599.84 P = 551.34 RN/L = 3.0120

SECTION (1)LEFT WING TOP SURF DEPENDENT VARIABLE CP

2Y/BW	.2350	.2990	.3640	.4270	.5340	.6730	.7800	.8870	.9720	1.0000
X/CW										
.000	.0002	-.0023	-.1084	.4003	.7273	.7060	.6856	.6682	.0476	
.010		-.0579	-.1200		.3477	.4456	.4052	.2789		
.020		-.0795		.0000	.2372	.2686	.2545	.2135	-.1256	
.040			-.0864	.0364						
.041	-.0728									
.050					.0228	.0255	.0194	-.0054		
.069									-.1804	
.090					-.1502					
.081				-.0907						
.096			-.0212							
.094		-.1378								
.113	-.0683									
.150					-.3469	-.3319	-.2806	-.2507		
.157									-.3799	
.163			.0000							
.177				-.2309						
.229		-.1051								
.235			-.1397							
.247	-.0983									
.250					-.4380	-.4745	-.4486	-.4177		

AMES 11-073(OA148) -140A/B/C/R ORB LEFT WING TOP (XEBU58)

ALPHA (3) = 3.928 BETA (1) = -3.861

SECTION (1)LEFT WING TOP SURF DEPENDENT VARIABLE CP

2Y/BW	.2350	.2990	.3640	.4270	.5340	.6730	.7800	.8870	.9720	1.0000
X/CW										
.274				-.3232						
.345									-.4600	
.362		-.0035								
.390			-.2580							
.400					-.4968	-.5829		-.5824		
.402				-.4224						
.418										-.2226
.429	-.0491									
.497		-.1845								
.503									-.5475	
.547	-.0784									
.550					-.5027	-.6120				
.565				-.4037						
.600								-.5926		
.633	-.2485									
.637			-.3494							
.650							-.5939			
.670									-.6795	
.700		-.3257				-.5710				
.723										-.6384
.725					-.1967					
.727	-.2978									
.750							-.4437	-.4355		
.760				-.1641						
.775					-.2392	-.2819				
.793	.0027									
.799			-.1245							
.808				-.1267						
.834		-.0241								
.840			-.0770							
.850					-.2234	-.1758	-.4204			
.857				-.1111						
.862									-.7188	
.866		-.1862								
.879			-.0855							
.900		-.0466			-.1821			-.3739		
.905				-.0958						
.919			-.0734							
.950					-.0825	-.1173	-.3505			
.953				-.0658						
.955			-.0732							
.965		-.0928								

AMES 11-073(OA148) -140A/B/C/R ORB LEFT WING TOP (XEBU58)

ALPHA (3) = 3.929 BETA (2) = .192 MACH = 1.2467 Q = 599.84 P = 551.34 RN/L = 3.0120

SECTION (1)LEFT WING TOP SURF DEPENDENT VARIABLE CP

2Y/BW	.2350	.2930	.3640	.4270	.5340	.6730	.7800	.8870	.9720	1.0000
X/CW										
.000	-.0317	-.1434	-.2864	.2773	.6360	.6195	.5944	.5749	-.0276	
.010		-.2026	-.2452		.2364	.3475	.3091	.1859		
.020		-.1981		.0000	.1488	.1855	.1731	.1203	-.1983	
.040			-.1382	-.0350						
.041	-.1352									
.050					-.0325	-.0320	-.0457	-.0693		
.069									-.2448	
.080					-.1874					
.081				-.1301						
.086			-.0540							
.094		-.2078								
.113	-.1482									
.150					-.3510	-.3562	-.3175	-.2916		
.157									-.4190	
.163			.0000							
.177				-.2198						
.229		-.1010								
.246			-.1398							
.247	-.1574									
.250					-.4271	-.4817	-.4681	-.4462		
.274				-.3026						
.345									-.4860	
.362		-.0117								
.390			-.2495							
.400					-.4762	-.5701		-.5968		
.402				-.4107						
.418										-.3634
.479	-.0509									
.497		-.1955								
.503									-.5608	
.547	-.0850									
.550					-.4889	-.5888				
.565				-.3816						
.600								-.6159		
.633	-.2604									
.637			-.2637							
.650							-.6026			
.670									-.6906	
.700		-.3212				-.3801				
.723										-.7267
.725					-.2176					
.727	-.2914									
.750							-.4549	-.4552		
.760				-.1618						
.775					-.2778	-.2975				

AMES 11-073(OA148) -140A/B/C/R ORB LEFT WING TOP (XEBU58)

ALPHA (3) = 3.929 BETA (2) = .192

SECTION (1)LEFT WING TOP SURF DEPENDENT VARIABLE CP

2Y/BW	.2350	.2990	.3640	.4270	.5340	.6730	.7800	.8870	.9720	1.0000
X/CW										
.793	.1226									
.798			-.1135							
.808				-.1687						
.834		-.0410								
.839			-.1606							
.850					-.2082	-.2008	-.4163			
.857				-.1567						
.862									-.7026	
.865		-.2531								
.879			-.1494							
.900		-.1081			-.1730			-.3567		
.905				-.1442						
.919			-.1175							
.950					-.1067	-.1203	-.3250			
.953				-.1237						
.955			-.1180							
.965		-.1335								

ALPHA (3) = 3.933 BETA (3) = 4.251 MACH = 1.2467 Q = 599.84 P = 551.34 RN/L = 3.0120

SECTION (1)LEFT WING TOP SURF DEPENDENT VARIABLE CP

2Y/BW	.2350	.2990	.3640	.4270	.5340	.6730	.7800	.8870	.9720	1.0000
X/CW										
.000	-.0639	-.3143	-.3681	.1461	.5477	.5283	.5082	.4798	-.1282	
.010		-.3574	-.2688		.1395	.2355	.1939	.0677		
.020		-.3245		.0000	.0676	.0900	.0732	.0092	-.2950	
.040			-.2169	-.0686						
.041	-.1779									
.050					-.0888	-.1022	-.1237	-.1562		
.069									-.3242	
.090					-.2108					
.091				-.1380						
.066			-.1643							
.094		-.2702								
.113	-.2018									
.150					-.3492	-.3920	-.3625	-.3455		
.157									-.4667	
.163			.0000							
.177				-.2174						
.239		-.1097								
.245			-.1229							
.247	-.2035									
.250					-.4072	-.4947	-.4951	-.4821		

AMES 11-073(OA148) -140A/B/C/R ORB LEFT WING TOP (XEBU58)

ALPHA (3) = 3.933 BETA (3) = 4.251

SECTION (1)LEFT WING TOP SURF DEPENDENT VARIABLE CP

2Y/BW	.2350	.2990	.3640	.4270	.5340	.6730	.7800	.8870	.9720	1.0000
X/CW										
.274				-.2833						
.345										
.362		.0011							-.5322	
.390			-.2275							
.400					-.4628	-.5695		-.6162		
.402				-.3949						
.418										
.429	-.0435									-.5793
.497		-.1936								
.503										
.547	-.0798								-.5875	
.550					-.4599	-.5633				
.565				-.3226						
.600										
.633	-.2691							-.6142		
.637			-.2012							
.650										
.670							-.6063			
.700		-.2879							-.7127	
.723						-.2947				
.725										-.7090
.727	-.2857				-.2030					
.750										
.760				-.1392			-.4631	-.4440		
.775										
.793	.1416				-.2551	-.3015				
.798			-.1001							
.808				-.1819						
.824		-.0582								
.849			-.1882							
.850					-.1796	-.2334	-.4142			
.857				-.2000						
.862										
.865		-.2782							-.6624	
.879			-.1851							
.900		-.1391			-.1917			-.3279		
.905				-.1944						
.919			-.1496							
.950					-.1655	-.1558	-.2690			
.953				-.1701						
.955			-.1520							
.955		-.1704								

AMES 11-073(OA148) -140A/B/C/R ORB LEFT WING TOP (XE8U58)

ALPHA (4) = 7.966 BETA (1) = -3.855 MACH = 1.2463 Q = 599.67 P = 551.57 RN/L = 3.0105

SECTION (1)LEFT WING TOP SURF DEPENDENT VARIABLE CP

2Y/BW	.2350	.2990	.3640	.4270	.5340	.6730	.7800	.8870	.9720	1.0000
X/CW										
.000	.0533	-.1223	-.3480	.2178	.6362	.6589	.6610	.6140	-.0884	
.010		-.2150	-.3669		.0366	.1932	.1503	.0012		
.020		-.1927		.0000	-.0761	.0147	.0102	-.0704	-.3900	
.040			-.2715	-.2462						
.041	-.0691									
.050					-.2454	-.2013	-.2083	-.2529		
.069									-.4087	
.080					-.3823					
.081				-.3650						
.086			-.1936							
.094		-.1814								
.113	-.0701									
.150					-.5489	-.4940	-.4617	-.4396		
.157									-.5475	
.163			.0000							
.177				-.4781						
.229		-.1726								
.246			-.3085							
.247	-.1032									
.250					-.6267	-.6090	-.5854	-.5553		
.274				-.4365						
.345									-.5999	
.362		-.1356								
.390			-.3466							
.400					-.6572	-.7019		-.6176		
.402				-.4954						
.418										-.5748
.429	-.1530									
.497		-.2852								
.503									-.6110	
.547	-.1605									
.550					-.5752	-.6734				
.565				-.4658						
.600								-.6011		
.633	-.3358									
.637			-.4444							
.650							-.6050			
.670									-.5568	
.700		-.4219				-.5653				
.723										-.5428
.725					-.2768					
.727	-.3562									
.750							-.5100	-.5223		
.760				-.2261						
.775					-.3447	-.4651				

AMES 11-073(OA148) -140A/B/C/R ORB LEFT WING TOP (XEBU58)

ALPHA (4) = 7.960 BETA (1) = -3.855

SECTION (1)LEFT WING TOP SURF DEPENDENT VARIABLE CP

2Y/BW	.2350	.2990	.3640	.4270	.5340	.6730	.7800	.8870	.9720	1.0000
X/CW										
.793	-.1951									
.798			-.1784							
.808				-.2860						
.834		-.0486								
.839			-.1971							
.850					-.2452	-.4077	-.5050			
.857				-.2170						
.862									-.5535	
.865		-.2235								
.879			-.1746							
.900		-.0527			-.2260			-.5185		
.905				-.1661						
.919			-.0804							
.950					-.1820	-.3262	-.4585			
.953				-.113[illegible]						
.955			-.0503							
.955		-.0857								

ALPHA (4) = 7.970 BETA (2) = .187 MACH = 1.2463 Q = 599.67 P = 551.57 RN/L = 3.0105

SECTION (1)LEFT WING TOP SURF DEPENDENT VARIABLE CP

2Y/BW	.2350	.2990	.3640	.4270	.5340	.6730	.7800	.8870	.9720	1.0000
X/CW										
.000	-.0025	-.3259	-.5414	-.0212	.4957	.5474	.5398	.4893	-.2750	
.010		-.3955	-.5033		-.0991	.0645	.0201	-.1222		
.020		-.3690		.0000	-.2030	-.0871	-.0953	-.1771	-.5184	
.040			-.4063	-.3727						
.041	-.1243									
.050					-.3273	-.2791	-.2871	-.3339		
.069									-.5201	
.080					-.4221					
.081				-.3202						
.095			-.3146							
.094		-.2532								
.113	-.1480									
.150					-.5563	-.5315	-.5037	-.4899		
.157									-.5909	
.163			.0000							
.177				-.3630						
.229		-.2362								
.245			-.2791							
.247	-.1664									
.250					-.5976	-.6246	-.6094	-.5879		

DATE 11 FEB 76 TABULATED PRESSURE DATA - OA148 (AMES 11-073-1)

AMES 11-073(OA148) -140A/B/C/R ORB LEFT WING TOP (XEBU58)

ALPHA (4) = 7.970 BETA (2) = .187

SECTION (1)LEFT WING TOP SURF DEPENDENT VARIABLE CP

2Y/BW	.2350	.2990	.3640	.4270	.5340	.6730	.7800	.8870	.9720	1.0000
X/CW										
.274				-.3928						
.345										
.362		-.1140							-.6153	
.390			-.3328							
.400					-.5700	-.7024		-.6244		
.402				-.4638						
.418										
.429	-.1503									-.6318
.497		-.2793								
.503										
.547	-.1480								-.6233	
.550					-.5336	-.6730				
.565				-.4648						
.600										
.633	-.3320							-.6104		
.637			-.4633							
.650										
.670							-.6127			
.700		-.4047							-.5788	
.723						-.5329				
.725										-.5613
.727	-.3549				-.2520					
.750										
.760				-.1927			-.5156	-.5069		
.775										
.793	-.0177				-.3401	-.4381				
.798			-.1656							
.808				-.2902						
.834		-.0643								
.839			-.2181							
.850					-.2900	-.3744	-.5019			
.857				-.2807						
.862										
.885		-.2757							-.5625	
.879			-.1964							
.900		-.1287			-.2777			-.4915		
.905				-.2273						
.919			-.1318							
.950										
.953				-.1735	-.2099	-.2808	-.4459			
.965			-.1259							
.966		-.1539								

AMES 11-073(OA148) -140A/B/C/R ORB LEFT WING (XE8U58)

ALPHA (4) = 7.894 BETA (3) = 4.250 MACH = 1.2463 Q = 599.67 P = 551.57 RN/L = 3.0105

SECTION (1)LEFT WING TOP SURF DEPENDENT VARIABLE CP

2Y/BW	.2350	.2990	.3640	.4270	.5340	.6730	.7800	.8870	.9720	1.0000
X/CW										
.000	-.0559	-.5321	-.5064	-.1783	.3642	.4204	.4144	.3568	-.4630	
.010		-.4786	-.4952		-.2056	-.0577	-.1130	-.2422		
.020		-.4729		.0000	-.2835	-.1905	-.2096	-.2940	-.6027	
.040			-.4562	-.2248						
.041	-.1700									
.050					-.3886	-.3545	-.3651	-.4263		
.069									-.5918	
.080					-.4594					
.081				-.2629						
.086			-.4041							
.094		-.4584								
.113	-.2100									
.150					-.5561	-.5645	-.5440	-.5416		
.157									-.5899	
.163			.0000							
.177				-.2972						
.229		-.2449								
.245			-.3421							
.247	-.2272									
.250					-.4934	-.6394	-.6354	-.6232		
.274				-.3516						
.345									-.6107	
.362		-.0231								
.390			-.2557							
.400					-.5075	-.6669		-.6447		
.402				-.4580						
.418										-.6028
.479	-.1330									
.497		-.2375								
.503									-.6074	
.547	-.1276									
.550					-.5108	-.6486				
.565				-.4760						
.600								-.6208		
.633	-.3496									
.637			-.4150							
.650							-.6051			
.670									-.5764	
.700		-.3855				-.4883				
.723										-.5657
.725					-.2474					
.727	-.3567									
.750							-.5227	-.5304		
.760				-.1804						
.775					-.3163	-.3803				

AMES 11-073(OA148) -140A/B/C/R ORB LEFT WING TOP (XEBU58)

ALPHA (4) = 7.894 BETA (3) = 4.250

SECTION (1)LEFT WING TOP SURF DEPENDENT VARIABLE CP

2Y/BW	.2350	.2990	.3640	.4270	.5340	.6730	.7800	.8870	.9720	1.0000
X/CW										
.793	.0539									
.798			-.1583							
.808				-.2847						
.834		-.1272								
.839			-.2487							
.850					-.2325	-.2241	-.4988			
.857				-.2709						
.862									-.5702	
.855		-.3083								
.879			-.2184							
.900		-.1713			-.2276			-.5006		
.905				-.2750						
.919			-.1848							
.950					-.1860	-.1822	-.4157			
.953				-.1987						
.955			-.2208							
.965		-.2106								

ALPHA (5) = 11.923 BETA (1) = -3.838 MACH = 1.2454 Q = 599.32 P = 552.04 RN/L = 3.0114

SECTION (1)LEFT WING TOP SURF DEPENDENT VARIABLE CP

2Y/BW	.2350	.2990	.3640	.4270	.5340	.6730	.7800	.8870	.9720	1.0000
X/CW										
.000	.0568	-.3259	-.4839	-.0026	.5123	5495	.5366	.4451	-.3684	
.010		-.3890	-.4317		-.1914	-.0421	-.1295	-.2838		
.020		-.3795		.0000	-.3033	-.2029	-.2502	-.3476	-.6217	
.040			-.3728	-.4565						
.041	-.0642									
.050					-.4469	-.3883	-.4140	-.4806		
.069									-.6058	
.080					-.5491					
.081				-.5167						
.096			-.3001							
.094		-.2629								
.113	-.0787									
.150					-.6794	-.6293	-.6012	-.6114		
.157									-.6143	
.183			.0000							
.177				-.5956						
.229		-.2318								
.246			-.3809							
.247	-.1062									
.250					-.7328	-.6954	-.6221	-.6136		

AMES 11-073(OA148) -140A/B/C/R ORB LEFT WING TOP (XEBU58)

ALPHA (5) = 11.923 BETA (1) = -3.838

SECTION (1)LEFT WING TOP SURF DEPENDENT VARIABLE CP

2Y/BW	.2350	.2990	.3640	.4270	.5340	.6730	.7800	.8870	.9720	1.0000
X/CW										
.274				-.5752						
.345									-.6323	
.362		-.1880								
.390			-.4700							
.400					-.7295	-.6613		-.6380		
.402				-.5896						
.418										-.6486
.429	-.1882									
.497		-.4503								
.503									-.6444	
.547	-.2841									
.550					-.6737	-.6452				
.585				-.5778						
.600								-.6210		
.633	-.4606									
.637			-.5185							
.650							-.5989			
.670									-.5830	
.700		-.5212				-.6134				
.723										-.5580
.725					-.5689					
.727	-.4460									
.750							-.5548	-.6017		
.760				-.2848						
.775					-.5874	-.5645				
.793	-.2190									
.798			-.2378							
.808				-.3937						
.834		-.1489								
.839			-.2849							
.850					-.4805	-.4654	-.5334			
.857				-.3257						
.862									-.5835	
.865		-.2506								
.879			-.2435							
.900		-.0491			-.4632			-.6053		
.905				-.2530						
.919			-.2227							
.950					-.3951	-.3919	-.4549			
.953				-.1823						
.955			-.2186							
.965		-.1340								

AMES 11-073(OA148) -140A/B/C/R ORB LEFT WING TOP (XE8U58)

ALPHA (5) = 11.931 BETA (2) = .197 MACH = 1.2454 Q = 599.32 P = 552.04 RN/L = 3.0114

SECTION (1)LEFT WING TOP SURF DEPENDENT VARIABLE CP

2Y/BW	.2350	.2990	.3640	.4270	.5340	.6730	.7800	.8870	.9720	1.0000
X/CW										
.000	-.0295	-.4748	-.4683	-.2030	.3327	.3834	.3621	.2699	-.5290	
.010		-.4153	-.4524		-.3424	-.1999	-.2827	-.4360		
.020		-.4027		.0000	-.4415	-.3435	-.3952	-.4766	-.6452	
.040			-.4422	-.4863						
.041	-.1362									
.050					-.5600	-.4984	-.5283	-.5866		
.069									-.6431	
.080					-.6408					
.081				-.5052						
.086			-.4188							
.094		-.4599								
.113	-.1787									
.150					-.7402	-.6936	-.6713	-.6814		
.157									-.6450	
.163			.0000							
.177				-.4891						
.229		-.5322								
.246			-.4644							
.247	-.1670									
.250					-.7359	-.7610	-.6860	-.6982		
.274				-.5126						
.345									-.6486	
.362		-.3781								
.390			-.4373							
.400					-.7466	-.7420		-.6918		
.402				-.5164						
.418										-.6405
.429	-.2543									
.497		-.4131								
.503									-.6559	
.547	-.2550									
.550					-.6832	-.7162				
.565				-.5138						
.600								-.6641		
.633	-.4475									
.637			-.5569							
.650							-.6412			
.670									-.6232	
.700		-.4750				-.6441				
.723										-.6111
.725					-.3292					
.727	-.4337									
.750							-.5698	-.6280		
.760				-.2362						
.775					-.4069	-.5783				

AMES 11-073(OA148) -140A/B/C/R ORB LEFT WING TOP (XE3U58)

ALPHA (5) = 11.931 BETA (2) = .197

SECTION (1)LEFT WING TOP SURF DEPENDENT VARIABLE CP

2Y/BW	.2350	.2990	.3640	.4270	.5340	.6730	.7800	.8870	.9720	1.0000
X/CW										
.793	-.1450									
.798			-.2326							
.808				-.4046						
.934		-.1493								
.839			-.3321							
.850					-.3729	-.4775	-.5368			
.857				-.3879						
.862									-.6149	
.865		-.2863								
.879			-.2700							
.900		-.1777			-.2766			-.6117		
.905				-.3729						
.919			-.2004							
.950					-.1841	-.3508	-.4622			
.953				-.2983						
.955			-.2603							
.965		-.2066								

ALPHA (5) = 11.925 BETA (3) = 4.259 MACH = 1.2454 Q = 599.32 P = 552.04 RN/L = 3.0114

SECTION (1)LEFT WING TOP SURF DEPENDENT VARIABLE CP

2Y/BW	.2350	.2990	.3640	.4270	.5340	.6730	.7800	.8870	.9720	1.0000
X/CW										
.000	-.0989	-.5094	-.5227	-.4359	.1526	.1933	.1884	.0880	-.6375	
.010		-.4290	-.5234		-.4860	-.3553	-.4134	-.5374		
.020		-.4950		.0000	-.5618	-.4823	-.5097	-.5820	-.6254	
.040			-.5258	-.4347						
.041	-.2060									
.050					-.6539	-.5995	-.6144	-.6651		
.069									-.6140	
.020					-.6687					
.081				-.4281						
.086			-.4964							
.094		-.5680								
.113	-.2302									
.150					-.6704	-.7173	-.7096	-.7103		
.157									-.6107	
.163			.0000							
.177				-.4503						
.229		-.6666								
.245			-.4805							
.247	-.2641									
.250					-.6303	-.6988	-.6760	-.7023		

AMES 11-073(OA148) -140A/B/C/R ORB LEFT WING TOP (XE8U58)

ALPHA (5) = 11.925 BETA (3) = 4.259

SECTION (1)LEFT WING TOP SURF DEPENDENT VARIABLE CP

X/CW \ 2Y/BW	.2350	.2990	.3640	.4270	.5340	.6730	.7800	.8870	.9720	1.0000
.274				-.4660						
.345										
.362		-.3563							-.6050	
.390			-.5467							
.400					-.6255	-.7080		-.6248		
.402				-.5207						
.418										
.429	-.2852									-.6031
.497		-.3679								
.503										
.547	-.2190								-.6126	
.550										
.565					-.5576	-.6644				
.600				-.5375						
.633	-.4169							-.6101		
.637			-.4986							
.650										
.670							-.6307			
.700		-.4068							-.5913	
.723						-.6116				
.725										-.5841
.727	-.4044				-.2342					
.750										
.760							-.5869	-.5914		
.775				-.2425						
.793	-.0082				-.3805	-.5732				
.799			-.2129							
.808				-.3997						
.834		-.2103								
.839			-.3012							
.850					-.3343	-.5488	-.5604			
.857				-.3697						
.862										
.865		-.3189							-.5811	
.879			-.2661							
.900		-.2080			-.3569			-.5829		
.905				-.3351						
.919			-.2363							
.950					-.3314	-.1790	-.4975			
.953				-.2791						
.955			-.2325							
.955		-.2855								

AMES 11-073(OA148) -140A/B/C/R ORB LEFT WING TOP (XEBU59) (05 AUG 75)

REFERENCE DATA

SREF = 2690.0000 SQ.FT. XMRP = 1076.6800 IN. XO
LREF = 474.8000 IN. YMRP = .0000 IN. YO
BREF = 936.0680 IN. ZMRP = 375.0000 IN. ZO
SCALE = .0300

PARAMETRIC DATA

RUDDER = 10.000 SPDBRK = 55.000
BDFLAP = 16.300 L-ELVN = 4.000
R-ELVN = -4.000 MACH = 1.100

ALPHA (1) = -4.026 BETA (1) = -3.831 MACH = 1.1006 Q = 600.08 P = 707.67 RN/L = 3.1805

SECTION (1)LEFT WING TOP SURF DEPENDENT VARIABLE CP

2Y/BW	.2350	.2990	.3640	.4270	.5340	.6730	.7800	.8870	.9720	1.0000
X/CW										
.000	-.2372	-.1146	-.1539	.2699	.5949	.5230	.4723	.4953	-.6204	
.010		-.0554	-.0443		.7165	.6884	.6515	.5701		
.020		-.0492		.0000	.6403	.5926	.5658	.5261	-.1303	
.040			.0422	.4695						
.041	-.1475									
.050					.4305	.3832	.3635	.3410		
.069									-.1942	
.080					.2442					
.081				.3570						
.086			.2479							
.094		-.0151								
.113	-.1165									
.150					.0255	.0022	.0191	-.0051		
.157									-.3478	
.163			.0000							
.177				.0795						
.229		.0280								
.246			.1742							
.247	.0033									
.250					-.1379	-.2002	-.2259	-.2548		
.274				-.0315						
.345									-.3610	
.352		.2125								
.390			-.0129							
.400					-.0602	-.2788		-.4759		
.402				-.1473						
.418										-.7002
.429	.1143									
.497		.0154								
.503									-.4062	
.547	.1300									
.550					.0533	-.0471				
.565				.1842						
.600								-.2408		
.633	-.0220									
.637			.2335							
.650							-.1625			
.670									-.2889	

AMES 11-073(OA148) -140A/B/C/R ORB LEFT WING TOP (XE8U59)

ALPHA (1) = -4.026 BETA (1) = -3.831

SECTION (1)LEFT WING TOP SURF DEPENDENT VARIABLE CP

2Y/BW	.2350	.2990	.3640	.4270	.5340	.6730	.7800	.8870	.9720	1.0000
X/CW										
.700		.2532				-.0552				
.723										-.5905
.725					-.0033					
.727	.2255									
.750							-.2593	-.2872		
.760				-.0554						
.775					-.2218	-.2705				
.793	.3556									
.798			-.0424							
.808				-.1875						
.834		-.0099								
.839			-.1790							
.850					-.1837	-.2115	-.1705			
.857				.1906						
.862									-.1343	
.865		-.2662								
.879			-.1452							
.900		-.1286			-.2262			-.0737		
.905				-.1544						
.919			-.1773							
.950					-.1315	-.1350	-.0110			
.953				-.1667						
.955			-.1546							
.965		-.1340								

ALPHA (1) = -3.894 BETA (2) = .203 MACH = 1.1006 Q = 600.08 P = 707.67 RN/L = 3.1805

SECTION (1)LEFT WING TOP SURF DEPENDENT VARIABLE CP

2Y/BW	.2350	.2990	.3640	.4270	.5340	.6730	.7800	.8870	.9720	1.0000
X/CW										
.000	-.2716	-.1178	-.0975	.2922	.5403	.4504	.3910	.4078	-.6920	
.010		-.0878	-.0260		.6523	.6184	.5948	.5281		
.020		-.0804		.0000	.5805	.5337	.5251	.4914	-.2058	
.040			.0410	.4108						
.041	-.2380									
.050					.3950	.3585	.3438	.3292		
.069									-.2499	
.080					.2402					
.081				.3185						
.085			.2069							
.094		-.0423								
.113	-.1827									
.150					.0386	.0187	.0351	.0062		

AMES 11-073(OA148) -140A/B/C/R ORB LEFT WING TOP (XE8U59)

ALPHA (1) = -3.894 BETA (2) = .203

SECTION (1)LEFT WING TOP SURF DEPENDENT VARIABLE CP

2Y/BW	.2350	.2990	.3640	.4270	.5700	.6730	.7800	.8870	.9720	1.0000
X/CW										
.157									-.3602	
.163			.0000							
.177				.0907						
.229		.0147								
.246			.1671							
.247	-.0153									
.250					-.1013	-.1611	-.1871	-.2345		
.274				-.0139						
.345									-.2856	
.362		.1843								
.390			-.0050							
.400					.0429	-.0396		-.2892		
.402				-.0510						
.418										-.7798
.429	.1002									
.497		.0192								
.503									-.2982	
.547	.1208									
.550					.0717	-.0641				
.555				.1679						
.600								-.3039		
.633	.0481									
.637			.2124							
.650							-.1885			
.670									-.3621	
.700		.2428				-.0833				
.723										-.4930
.725					-.0272					
.727	.2188									
.750							-.2959	-.3420		
.760				-.0771						
.775					-.2503	-.2943				
.793	.3318									
.798			-.0623							
.808				-.2229						
.834		-.0348								
.839			-.2203							
.850					-.2198	-.2471	-.2314			
.857				-.2381						
.862									-.1435	
.865		-.3000								
.879			-.1916							
.900		-.1644			-.2743			-.1521		
.905				-.2072						
.919			-.2203							

AMES 11-073(OA148) -140A/B/C/R ORB LEFT WING TOP (XEBU59)

ALPHA (1) = -3.894 BETA (2) = .203

SECTION (1)LEFT WING TOP SURF DEPENDENT VARIABLE CP

2Y/BW	.2350	.2990	.3640	.4270	.5340	.6730	.7800	.8870	.9720	1.0000
X/CW										
.950					-.2083	-.1950	-.0985			
.953				-.2146						
.955			-.2108							
.965		-.2009								

ALPHA (1) = -4.013 BETA (3) = 4.281 MACH = 1.1006 Q = 600.08 P = 707.67 RN/L = 3.1805

SECTION (1)LEFT WING TOP SURF DEPENDENT VARIABLE CP

2Y/BW	.2350	.2990	.3640	.4270	.5340	.6730	.7800	.8870	.9720	1.0000
X/CW										
.000	-.2735	-.1389	-.0438	.3255	.5005	.3801	.3019	.3070	-.7661	
.010		-.0956	.0033		.6034	.5550	.5123	.4531		
.020		-.0838		.0000	.5442	.4852	.4538	.4187	-.3016	
.040			.0570	.4012						
.041	-.3002									
.050					.3721	.3218	.2969	.2795		
.069									-.3144	
.080					.2272					
.081				.3233						
.086			.2258							
.094		-.0615								
.113	-.2422									
.150					.0449	.0225	.0194	-.0051		
.157									-.3712	
.163			.0000							
.177				.1352						
.229		.0337								
.246			.1841							
.247	-.0335									
.250					-.0799	-.1547	-.1680	-.1931		
.274				.0196						
.345									-.3267	
.362		.2200								
.390			.0229							
.400					.0390	-.0380		-.2970		
.402				-.0364						
.418										-.4263
.429	.1127									
.497		.0621								
.503									-.2921	
.547	.1472									
.560					.0534	-.0715				
.565				.1475						

AMES 11-073(OA148) -140A/B/C/R ORB LEFT WING TOP (XE8U59)

ALPHA (1) = -4.013 BETA (3) = 4.28

SECTION (1)LEFT WING TOP SURF DEPENDENT VARIABLE CP

2Y/BW	.2350	.2990	.3640	.4270	.5340	.6730	.7800	.8870	.9720	1.0000
X/CW										
.600								-.3207		
.633	.0556									
.637			.1882							
.650							-.2052			
.670									-.3411	
.700		.2176				-.1113				
.723										-.2928
.725					-.0556					
.727	.1891									
.750							-.3263	-.3664		
.760				-.1006						
.775					-.2801	-.3224				
.793	.3078									
.798			-.0895							
.808				-.2582						
.834		-.0618								
.839			-.2627							
.850					-.2567	-.2830	-.2867			
.857				-.2832						
.862									-.1227	
.865		-.3359								
.879			-.2440							
.900		-.2100			-.3160			-.1921		
.905				-.2669						
.919			-.2672							
.950					-.2827	-.2396	-.1645			
.953				-.2662						
.955			-.2620							
.965		-.2595								

ALPHA (2) = .051 BETA (1) = -3.852 MACH = 1.1008 Q = 600.03 P = 707.43 RN/L = 3.1794

SECTION (1)LEFT WING TOP SURF DEPENDENT VARIABLE CP

2Y/BW	.2350	.2990	.3640	.4270	.5340	.6730	.7800	.8870	.9720	1.0000
X/CW										
.000	-.1502	-.0458	-.0091	.4528	.6753	.6099	.5735	.5823	-.3894	
.010		-.0585	.0248		.5629	.5713	.5263	.4076		
.020		-.0983		.0000	.4525	.4217	.3933	.3498	-.1579	
.040			.0539	.2870						
.041	-.1544									
.050					.2116	.1611	.1394	.1180		
.059									-.2366	
.080					.0141					

AMES 11-073(OA148) -140A/B/C/R ORB LEFT WING TOP (XE8U59)

ALPHA (2) = .051 BETA (1) = -3.852

SECTION (1)LEFT WING TOP SURF DEPENDENT VARIABLE CP

2Y/BW	.2350	.2990	.3640	.4270	.5340	.6730	.7800	.8870	.9720	1.0000
X/CW										
.081				.1414						
.086			.1460							
.094		-.1016								
.113	-.1156									
.150					-.2208	-.2547	-.2250	-.2134		
.157									-.4472	
.163			.0000							
.177				-.0787						
.229		-.0235								
.246			.0146							
.247	-.0884									
.250					-.3408	-.4071	-.4241	-.4305		
.274				-.2179						
.345									-.4790	
.362		.1122								
.390			-.1828							
.400					-.4641	-.5533		-.6464		
.402				-.3896						
.418										-.1591
.429	.0622									
.497		-.1024								
.503									-.5368	
.547	.0288									
.550					-.1121	-.4311				
.565				.0173						
.600								-.6479		
.633	-.1994									
.637			.1067							
.650							-.5785			
.670									-.4077	
.700		.0999				-.1313				
723										-.4557
.725					-.0386					
.727	.0177									
.750							-.2537	-.3425		
.760				-.0749						
.775					-.2302	-.2376				
.793	.2706									
.798			-.0638							
.808				-.1897						
.834		-.0316								
.839			-.1814							
.850					-.1917	-.1617	-.0358			
.857				-.1966						
.862									-.2719	

AMES 11-073(OA148) -140A/B/C/R ORB LEFT WING TOP (XE8U59)

ALPHA (2) = .051 BETA (1) = -3.852

SECTION (1)LEFT WING TOP SURF DEPENDENT VARIABLE CP

2Y/BW	.2350	.2990	.3640	.4270	.5340	.6730	.7800	.8870	.9720	1.0000
X/CW										
.865		-.2480								
.879			-.1587							
.900		-.1383			-.2165			-.1961		
.905				-.1766						
.919			-.1809							
.950					-.0764	-.0511	.1047			
.953				-.1741						
.955			-.1743							
.965		-.1770								

ALPHA (2) = .053 BETA (2) = .191 MACH = 1.1008 Q = 600.03 P = 707.43 RN/L = 3.1794

SECTION (1)LEFT WING TOP SURF DEPENDENT VARIABLE CP

2Y/BW	.2350	.2990	.3640	.4270	.5340	.6730	.7800	.8870	.9720	1.0000
X/CW										
.000	-.1697	-.1266	-.0324	.4191	.6145	.5319	.4946	.5098	-.2211	
.010		-.1671	-.0068		.4821	.4856	.4518	.3544		
.020		-.1922		.0000	.3794	.3442	.3229	.3002	-.1595	
.040			.0284	.2376						
.041	-.2253									
.050					.1637	.1044	.0883	.0856		
.069									-.2244	
.080					-.0209					
.081				.1036						
.086			.1349							
.094		-.1129								
.113	-.1855									
.150					-.2310	-.2622	-.2405	-.2191		
.157									-.4371	
.163			.0000							
.177				-.0911						
.229		-.0286								
.246			-.0063							
.247	-.0944									
.250					-.3313	-.3628	-.4158	-.4356		
.274				-.2123						
.345									-.4537	
.362		.0991								
.391			-.1801							
.400					-.4467	-.5270		-.6165		
.402				-.3637						
.418										-.1749
.429	.0590									

AMES 11-073(OA148) -140A/B/C/R ORB LEFT WING TOP (XEBU59)

ALPHA (2) = .055 BETA (2) = .191

SECTION (1)LEFT WING TOP SURF DEPENDENT VARIABLE CP

2Y/BW	.2350	.2990	.3640	.4270	.5340	.6730	.7800	.8870	.9720	1.0000
X/CW										
.497		-.1131								
.503									-.5082	
.547	.0088									
.550					-.0185	-.1433				
.565				.0909						
.600								-.6073		
.623	-.2049									
.637			.1249							
.650							-.1936			
.670									-.4293	
.700		.1438				-.1061				
.723										-.5260
.725					-.0469					
.727	.0923									
.750							-.2604	-.2828		
.760				-.0880						
.775					-.2655	-.2776				
.793	.2688									
.798			-.0790							
.806				-.2213						
.834		-.0558								
.839			-.2123							
.850					-.2300	-.2280	-.1069			
.857				-.2289						
.862									-.2379	
.865		-.2722								
.879			-.1858							
.900		-.1669			-.2704			-.0115		
.905				-.2111						
.919			-.2075							
.950					-.1793	-.1391	.0454			
.953				-.2078						
.955			-.2009							
.965		-.2180								

DATE 11 FEB 76 TABULATED PRESSURE DATA - O[illegible] 1-073-1)

AMES 11-073(OA1[illegible] /R ORB LEFT WING TOP (XEBU59)

ALPHA (2) = .049 BETA (3) = 4.255 MACH [illegible] Q = 600.03 P = 707.43 RN/L = 3.1794

SECTION (1)LEFT WING TOP SURF DEPENDENT VARIABLE CP

2Y/BW	.2350	.2990	.3640	.4270	.5340	.6730	.7800	.8870	.9720	1.0000
X/CW										
.000	-.1928	-.2444	-.0657	.4127	.5834	.4825	.4320	.4280	-.1855	
.010		-.2820	-.0309		.4206	.4111	.3603	.2493		
.020		-.2831		.0000	.3294	.2765	.2446	.2008	-.2160	
.040			.0296	.2053						
.041	-.2907									
.050					.1388	.0537	.0253	-.0007		
.069									-.2761	
.080					-.0338					
.081				.0964						
.085			.1265							
.094		-.1236								
.113	-.2505									
.150					-.2064	-.2654	-.2614	-.2643		
.157									-.4674	
.163			.0000							
.177				-.0678						
.229		-.0158								
.246			.0233							
.247	-.0962									
.250					-.3040	-.3688	-.3875	-.4568		
.274				-.1836						
.345									-.4704	
.362		.1069								
.390			-.1586							
.400					-.3941	-.4956		-.6139		
.402				-.3192						
.418										-.2878
.429	.0754									
.497		-.0857								
.503									-.5161	
.547	.0324									
.550					-.0064	-.1068				
.565				.0746						
.600								-.5147		
.633	-.1664									
.637			.1099							
.650							-.1912			
.670									-.3964	
.700		.1204				-.1291				
.723										-.6599
.725					-.0793					
.727	.0866									
.750							-.3050	-.2084		
.760				-.1153						
.775					-.2946	-.3199				

AMES 11-073(OA148) -140A/B/C/R ORB LEFT WING TOP (XE8U59)

ALPHA (2) = .049 BETA (3) = 4.255

SECTION (1)LEFT WING TOP SURF DEPENDENT VARIABLE CP

2Y/BW	.2350	.2990	.3640	.4270	.5340	.6730	.7800	.8870	.9720	1.0000
X/CW										
.793	.2291									
.798			-.1108							
.808				-.2632						
.834		-.0917								
.839			-.2637							
.850					-.2710	-.2697	-.1853			
.857				-.2781						
.862									-.2480	
.865		-.3255								
.879			-.2412							
.900		-.2094			-.3201			.0021		
.905				-.2664						
.919			-.2571							
.950					-.2684	-.2050	-.0302			
.953				-.2617						
.955			-.2585							
.965		-.2674								

ALPHA (3) = 3.965 BETA (1) = -3.853 MACH = 1.1009 Q = 600.[illegible]7 P = 707.44 RN/L = 3.1827

SECTION (1)LEFT WING TOP SURF DEPENDENT VARIABLE CP

2Y/BW	.2350	.2990	.3640	.4270	.5340	.6730	.7800	.8870	.9720	1.0000
X/CW										
.000	-.0718	-.0781	-.1291	.4706	.7103	.6841	.6712	.6337	.0058	
.010		-.1542	-.1151		.3238	.3990	.3292	.1465		
.020		-.1738		.0000	.2023	.2091	.1705	.0776	-.2550	
.040			-.0588	.0561						
.041	-.1449									
.050					-.0411	-.0605	-.0961	-.1496		
.069									-.3194	
.080					-.2219					
.081				-.1033						
.086			-.0076							
.094		-.2224								
.113	-.1215									
.150					-.3890	-.4488	-.4146	-.4022		
.157									-.5428	
.163			.0000							
.177				-.2581						
.229		-.0824								
.245			-.1404							
.247	-.1707									
.250					-.5025	-.5778	-.5925	-.5738		

AMES 11-073(OA148) -140A/B/C/R ORB LEFT WING TOP (XEBU59)

ALPHA (3) = 3.965 BETA (1) = -3.853

SECTION (1)LEFT WING TOP SURF DEPENDENT VARIABLE CP

2Y/BW	.2350	.2990	.3640	.4270	.5340	.6730	.7800	.8870	.9720	1.0000
X/CW										
.274				-.3665						
.345									-.6385	
.362		.0410								
.390			-.3028							
.400					-.5818	-.7198		-.7540		
.402				-.5017						
.418										-.4368
.429	.0057									
.497		-.1956								
.503									-.5947	
.547	-.0755									
.550					-.3354	-.7063				
.565				-.2008						
.600								-.5740		
.633	-.3107									
.637			-.1239							
.650							-.5662			
.670									-.5262	
.700		-.1544				-.4348				
.723										-.5239
.725					-.1749					
.727	-.3151									
.750							-.4719	-.4337		
.760				-.1227						
.775					-.2417	-.2293				
.793	.1933									
.798			-.0922							
.808				-.1553						
.834		-.0431								
.839			-.1863							
.850					-.1246	-.1249	-.3860			
.857				-.1655						
.862									-.4905	
.865		-.2927								
.879			-.1388							
.900		-.1307			-.1145			-.3501		
.905				-.1297						
.919			-.1284							
.950					-.0109	-.0631	-.2627			
.953				-.0625						
.955			-.1106							
.965		-.1613								

AMES 11-073(OA148) -,40A/B/C/R ORB LEFT WING TOP (XEBU59)

ALPHA (3) = 3.964 BETA (2) = .193 MACH = 1.1009 Q = 600.17 P = 707.44 RN/L = 3.1827

SECTION (1)LEFT WING TOP SURF DEPENDENT VARIABLE CP

2Y/BW	.2350	.2990	.3640	.4270	.5340	.6730	.7800	.8870	.9720	1.0000
X/CW										
.000	-.1167	-.2364	-.2513	.3828	.6297	.5992	.5904	.5535	-.0864	
.010		-.3041	-.1995		.2249	.2943	.2291	.0635		
.020		-.2991		.0000	.1179	.1183	.0832	-.0072	-.3292	
.040			-.1117	.0029						
.041	-.2210									
.050					-.0879	-.1252	-.1558	-.2099		
.069									-.3798	
.080					-.2533					
.081				-.1231						
.086			-.0249							
.094		-.2927								
.113	-.2033									
.150					-.3949	-.4674	-.4363	-.4299		
.157									-.5781	
.163			.0000							
.177				-.2582						
.229		-.0919								
.246			-.1451							
.247	-.2232									
.250					-.4888	-.5783	-.5950	-.5898		
.274				-.3558						
.345									-.6585	
.362		.0331								
.390			-.2953							
.400					-.5480	-.6830		-.7594		
.402				-.4845						
.418										-.5900
.429	.0004									
.497		-.2090								
.503									-.6775	
.547	-.0868									
.550					-.2474	-.6645				
.565				-.1647						
.600								-.7160		
.633	-.3147									
.637			-.0950							
.650							-.6454			
.670									-.5485	
.700		-.0945				-.2313				
.723										-.5524
.725					-.1452					
.727	-.2482									
.750							-.4744	-.4323		
.760				-.1229						
.775					-.2455	-.2547				

AMES 11-073(OA148) -140A/B/C/R ORB LEFT WING TOP (XEBU59)

ALPHA (3) = 3.964 BETA (2) = .193

SECTION (1)LEFT WING TOP SURF DEPENDENT VARIABLE CP

2Y/BW	.2350	.2990	.3640	.4270	.5340	.6730	.7800	.8870	.9720	1.0000
X/CW										
.793	.2209									
.798			-.0940							
.808				-.2066						
.834		-.0647								
.839			-.2430							
.850					-.1968	-.1446	-.2828			
.857				-.2249						
.862									-.5488	
.865		-.3263								
.879			-.2040							
.900		-.1669			-.1899			-.3805		
.905				-.2096						
.919			-.1974							
.950					-.0592	-.0451	-.0595			
.953				-.1572						
.955			-.1969							
.965		-.2067								

ALPHA (3) = 3.966 BETA (3) = 4.249 MACH = 1.1009 Q = 600.17 P = 707.44 RN/L = 3.1827

SECTION (1)LEFT WING TOP SURF DEPENDENT VARIABLE CP

2Y/BW	.2350	.2990	.3640	.4270	.5340	.6730	.7800	.8870	.9720	1.0000
X/CW										
.000	-.1605	-.4393	-.3084	.3039	.5622	.5239	.4928	.4368	-.2834	
.010		-.4814	-.1782		.1249	.1797	.1048	-.0728		
.020		-.4428		.0000	.0430	.0189	-.0344	-.1467	-.4780	
.040			-.1006	-.0185						
.041	-.2837									
.050					-.1296	-.1937	-.2457	-.3142		
.069									-.4918	
.080					-.2713					
.081				-.1255						
.086			.0023							
.094		-.3155								
.113	-.2830									
.150					-.4022	-.4890	-.4935	-.5040		
.157									-.5440	
.163			.0000							
.177				-.2314						
.229		-.0783								
.245			-.1131							
.247	-.2361									
.250					-.4628	-.5969	-.6223	-.6390		

DATE 11 FEB 75 TABULATED PRESSURE DATA - OA148 (AMES 11-073-1) (XE8U59)

AMES 11-073(OA148) -140A/B/C/R ORB LEFT WING TOP

ALPHA (3) = 3.966 BETA (3) = 4.249

SECTION (1)LEFT WING TOP SURF DEPENDENT VARIABLE CP

2Y/BW	.2350	.2990	.3640	.4270	.5340	.6730	.7800	.8870	.9720	1.0000
X/CW										
.274				-.3142					-.7068	
.345										
.362		.0518								
.390			-.2617							
.400					-.5387	-.6526		-.7878		
.402				-.4410						-.7456
.418										
.429	.0327									
.497		-.1749							-.7125	
.503										
.547	-.0512				-.2253	-.6012				
.550										
.565				-.1458						
.600								-.7253		
.633	-.2891									
.637			-.0471							
.650							-.6936			
.670									-.6204	
.700		-.0279				-.2570				
.723										-.6213
.725					-.1237					
.727	-.1645									
.750							-.2985	-.4874		
.760				-.1240						
.775					-.3005	-.3115				
.793	.1768									
.790			-.1181							
.808				-.2870						
.834		-.1065								
.839			-.3093							
.850					-.2814	-.2171	-.1410			
.857				-.3011						
.862									-.6163	
.865		-.3581								
.879			-.2584							
.900		-.2215			-.3149			-.4066		
.905				-.2903						
.919			-.2582							
.950					-.2102	-.1408	-.0033			
.953				-.2824						
.955			-.2627							
.965		-.2689								

AMES 11-073(OA148) -140A/B/C/R ORB LEFT WING TOP (XEBU59)

ALPHA (4) = 7.908 BETA (1) = -3.848 MACH = 1.0993 Q = 599.26 P = 708.35 RN/L = 3.1817

SECTION (1)LEFT WING TOP SURF DEPENDENT VARIABLE CP

2Y/BW	.2350	.2990	.3640	.4270	.5340	.6730	.7800	.8870	.9720	1.0000
X/CW										
.000	-.0383	-.2295	-.5232	.2449	.6213	.6234	.5952	.982	-.2744	
.010		-.3306	-.5183		-.0368	.0838	-.0129	.2128		
.020		-.3003		.0000	-.1213	-.0998	-.1546	-.2943	-.6586	
.040			-.3828	-.1985						
.041	-.1565									
.050					-.2983	-.3218	-.3785	-.4766		
.069									-.5947	
.080					-.4527					
.081				-.3162						
.086			-.2783							
.094		-.2797								
.113	-.1288									
.150					-.6519	-.6457	-.6399	-.6447		
.157									-.5935	
.163			.0000							
.177				-.4251						
.229		-.2432								
.246			-.2299							
.247	-.1845									
.250					-.6934	-.7724	-.6548	-.6191		
.274				-.4817						
.345									-.5530	
.362		-.0094								
.390			-.3821							
.400					-.7097	-.7508		-.6295		
.402				-.5833						
.418										-.5534
.429	-.0905									
.497		-.2892								
.503									-.5376	
.547	-.1118									
.550					-.5473	-.6516				
.565				-.4258						
.600								-.5508		
.633	-.3983									
.637			-.3707							
.650							-.5546			
.670									-.5058	
.700		-.5045				-.5803				
.723										-.4835
.725					-.2846					
.727	-.4359									
.750							-.5003	-.5149		
.760				-.1523						
.775					-.3526	-.4712				

AMES 11-073(OA148) -140A/B/C/R ORB LEFT WING TOP (XE8U59)

ALPHA (4) = 7.908 BETA (1) = -3.848

SECTION (1)LEFT WING TOP SURF DEPENDENT VARIABLE CP

2Y/BW	.2350	.2990	.3640	.4270	.5340	.6730	.7800	.8870	.9720	1.0000
X/CW										
.793	.1116									
.798			-.1142							
.808				-.1776						
.834		.0102								
.839			-.1999							
.850					-.2403	-.3749	-.4548			
.857				-.1627						
.862									-.4743	
.865		-.2840								
.879			-.1584							
.900		-.0665			-.1784			-.4851		
.905				-.1297						
.919			-.115[illegible]							
.950					-.0862	-.2615	-.4060			
.953				-.0842						
.955			-.0879							
.965		-.133[illegible]								

ALPHA (4) = 7.912 BETA (2) = .189 MACH = 1.0993 Q = 599.26 P = 708.35 RN/L = 3.1817

SECTION (1)LEFT WING TOP SURF DEPENDENT VARIABLE CP

2Y/BW	.2350	.2990	.3640	.4270	.5340	.6730	.7800	.8870	.9720	1.0000
X/CW										
.000	-.0979	-.4533	-.6845	.0562	.4925	.5018	.4755	.3755	-.4787	
.010		-.5184	-.5908		-.1550	-.0[illegible]59	-.1437	-.3383		
.020		-.4810		.0000	-.2301	-.2077	-.2652	-.4002	-.6334	
.040			-.4600	-.2343						
.041	-.2161									
.050					-.3656	-.4018	-.4583	-.5615		
.069									-.6342	
.080					-.4937					
.081				-.3013						
.086			-.3350							
.094		-.3631								
.113	-.2196									
.150					-.6597	-.6770	-.6800	-.6968		
.157									-.6058	
.163			.0000							
.177				-.3830						
.229		-.2248								
.246			-.2768							
.247	-.2589									
.250					-.6701	-.7869	-.7392	-.6735		

AMES 11-073(OA148) -140A/B/C/R ORB LEFT WING TOP (XEBU59)

ALPHA (4) = 7.912 BETA (2) = .169

SECTION (1)LEFT WING TOP SURF DEPENDENT VARIABLE CP

2Y/BW	.2350	.2990	.3640	.4270	.5340	.6730	.7800	.8870	.9720	1.0000
X/CW										
.274				-.4452						
.345									-.5927	
.362		.0087								
.390			-.3980							
.400					-.6684	-.8057		-.7124		
.402				-.5551						
.418										-.5870
.429	-.0368									
.497		-.2963								
.533									-.5776	
.547	-.1159									
.560					-.4073	-.6841				
.565				-.4185						
.600								-.5857		
.633	-.4009									
.637			-.2782							
.650							-.6119			
.670									-.5475	
.700		-.4301				-.5545				
.723										-.5381
.725					-.2083					
.727	-.4324									
.750							-.5389	-.5506		
.760				-.1079						
.775					-.3422	-.4161				
.793	.1169									
.798			-.1178							
.808				-.2357						
.834		-.0659								
.839			-.2827							
.840					-.2617	-.2304	-.4797			
.857				-.2469						
.862									-.5202	
.865		-.3165								
.879			-.1670							
.900		-.1422			-.2135			-.5175		
.905				-.2209						
.919			-.1749							
.950					-.1026	-.1500	-.4300			
.953				-.1723						
.955			-.1734							
.965		-.1772								

AMES 11-073(OA148) -140A/B/C/R ORB LEFT WING TOP (XEBU59)

ALPHA (4) = 7.911 BETA (3) = 4.247 MACH = 1.0993 Q = 599.26 P = 708.35 RN/L = 3.1817

SECTION (1)LEFT WING TOP SURF DEPENDENT VARIABLE CP

2Y/BW	.2350	.2990	.3640	.4270	.5340	.6730	.7800	.8870	.9720	1.0000
X/CW										
.000	-.1623	-.6233	-.4528	-.0159	.3693	.3698	.3278	.2254	-.6855	
.010		-.6050	-.4097		-.2639	-.1861	-.2982	-.4851		
.020		-.5805		.0000	-.3323	-.3212	-.3973	-.5351	-.7441	
.040			-.3971	-.1242						
.041	-.2846									
.050					-.4132	-.4861	-.5498	-.6584		
.069									-.7221	
.080					-.5034					
.081				-.1808						
.086			-.2699							
.094		-.6449								
.113	-.3107									
.150					-.5884	-.7138	-.7333	-.7670		
.157									-.7078	
.163			.0000							
.177				-.2872						
.229		-.1519								
.246			-.2408							
.247	-.3227									
.250					-.5851	-.8003	-.8258	-.8327		
.274				-.3912						
.345									-.7014	
.362		.0723								
.390			-.3340							
.400					-.6005	-.8333		-.8215		
.402				-.5191						
.418										-.6971
.429	-.0455									
.497		-.2581								
.503									-.6941	
.547	-.1036									
.550					-.4547	-.7402				
.565				-.3170						
.600								-.7087		
.633	-.3825									
.637			-.1836							
.650							-.6838			
.670									-.6713	
.700		-.2858				-.3383				
.723										-.6605
.725					-.1649					
.727	-.3750									
.750							-.5579	-.6603		
.750				-.2002						
.775					-.3280	-.3763				

AMES 11-073(OA148) -140A/B/C/R ORB LEFT WING TOP (XE9U59)

ALPHA (4) = 7.911 BETA (3) = 4.247

SECTION (1)LEFT WING TOP SURF DEPENDENT VARIABLE CP

2Y/BW	.2350	.2990	.3640	.4270	.5340	.6730	.7800	.8870	.9720	1.0000
X/CW										
.793	.1107									
.798			-.1456							
.808				-.3613						
.834		-.1474								
.839			-.3427							
.850					-.2724	-.2512	-.4986			
.857				-.3972						
.862									-.6713	
.865		-.3647								
.873			-.2805							
.900		-.2484			-.3186			-.6333		
.905				-.3017						
.919			-.3055							
.950					-.1886	-.1657	-.4234			
.953				-.2614						
.955			-.2757							
.965		-.3136								

ALPHA (5) = 11.969 BETA (1) = -3.832 MACH = 1.0972 Q = 598.33 P = 710.00 RN/L = 3.1878

SECTION (1)LEFT WING TOP SURF DEPENDENT VARIABLE CP

2Y/BW	.2350	.2990	.3640	.4270	.5340	.6730	.7800	.8870	.9720	1.0000
X/CW										
.000	-.0528	-.4699	-.6461	-.1639	.3671	.3895	.3603	.2481	-.6086	
.010		-.5290	-.5964		-.4459	-.3014	-.4114	-.5810		
.020		-.5133		.0000	-.5576	-.4699	-.5355	-.6368	-.6769	
.040			-.5125	-.6228						
.041	-.1527									
.050					-.6928	-.6420	-.6909	-.7638		
.059									-.6261	
.080					-.7922					
.081				-.7024						
.086			-.4300							
.094		-.3847								
.113	-.1432									
.150					-.8128	-.7706	-.7566	-.8226		
.157									-.6171	
.163			.0000							
.177				-.5432						
.229		-.3335								
.246			-.3906							
.247	-.1899									
.250					-.8187	-.7637	-.7671	-.7968		

AMES 11-073(OA148) -140A/B/C/R ORB LEFT WING TOP (XEBU59)

ALPHA (5) = 11.969 BETA (1) = -3.832

SECTION (1)LEFT WING TOP SURF DEPENDENT VARIABLE CP

2Y/BW	.2350	.2990	.3640	.4270	.5340	.6730	.7800	.8870	.9720	1.0000
X/CW										
.274				-.4506						
.345									-.6190	
.362		-.2258								
.390			-.4574							
.400					-.7349	-.7372		-.6413		
.402				-.5968						
.418										-.6160
.429	-.2570									
.487		-.3845								
.503									-.6276	
.547	-.1524									
.550					-.6836	-.7125				
.565				-.4821						
.600								-.6327		
.633	-.4543									
.637			-.4641							
.650							-.6442			
.670									-.5865	
.700		-.5766				-.6536				
.723										-.5615
.725					-.5176					
.727	-.5059									
.750							-.5929	-.6095		
.760				-.2380						
.775					-.6658	-.5722				
.793	.0198									
.798			-.2566							
.808				-.5193						
.834		-.0810								
.839			-.3106							
.850					-.3628	-.4355	-.5668			
.857				-.5203						
.862									-.5659	
.865		-.3140								
.879			-.3165							
.900		-.1415			-.3309			-.5950		
.905				-.4803						
.919			-.2971							
.950					-.2329	-.3351	-.5177			
.953				-.3296						
.955			-.2933							
.965		-.2876								

DATE 11 FEB 76 TABULATED PRESSURE DATA - OA149 (AMES 11-073-1) PAGE 4751

AMES 11-073(OA148) -140A/B/C/R OR3 LEFT WING TOP (XEEU59)

ALPHA (5) = 11.872 BETA (2) = .197 MACH = 1.0972 Q = 599.33 P = 710.00 RN/L = 3.1378

SECTION 11 LEFT WING TOP SURF DEPENDENT VARIABLE CP

2Y/BW	.2350	.2990	.3640	.4270	.5340	.6730	.7800	.8870	.9720	1.0000
X/CW										
.000	-.1311	-.6308	-.6117	-.3766	.2039	.2463	.2171	.1051	-.7321	
.010		-.5444	-.5954		-.5767	-.4155	-.5061	-.6800		
.020		-.5235		.0000	-.6635	-.5722	-.6339	-.7234	-.6697	
.040			-.5769	-.3222						
.041	-.2377									
.050					-.7240	-.7081	-.7605	-.8301		
.059									-.6496	
.080					-.7122					
.081				-.3262						
.086			-.5298							
.094		-.5992								
.113	-.2584									
.150					-.7300	-.8555	-.8022	-.8782		
.157									-.6418	
.163			.0000							
.177				-.3669						
.229		-.6851								
.246			-.4943							
.247	-.2603									
.250					-.6848	-.8203	-.8176	-.7111		
.274				-.5037						
.345									-.6420	
.362		-.1506								
.390			-.5812							
.400					-.7172	-.7807		-.6521		
.402				-.6211						
.418										-.5[illegible]
.420	-.2363									
.487		-.3340								
.503									-.6496	
.547	-.1112									
.550					-.6335	-.7394				
.565				-.5991						
.600								-.6598		
.623	-.5000									
.637			-.6416							
.650							-.6773			
.670									-.6179	
.700		-.5399				-.6768				
.723										-.6018
.725					-.3570					
.727	-.5253									
.750							-.6535	-.6350		
.760				-.2140						
.775					-.4980	-.5762				

AMES 11-073(OA148) -140A/B/C/R ORB LEFT WING TOP (XE8U59)

ALPHA (5) = 11.872 BETA (2) = .197

SECTION (1)LEFT WING TOP SURF DEPENDENT VARIABLE CP

2Y/BW	.2350	.2990	.3640	.4270	.5340	.6730	.7800	.8870	.9720	1.0000
X/CW										
.793	-.0608									
.798			-.1487							
.908				-.4590						
.834		-.1198								
.839			-.2789							
.850					-.4486	-.4340	-.6261			
.857				-.4491						
.862									-.5911	
.865		-.2743								
.879			-.2467							
.900		-.1409			-.3712			-.6246		
.905				-.4442						
.919			-.2768							
.950					-.1726	-.3054	-.5614			
.953				-.3927						
.955			-.3094							
.965		-.2690								

ALPHA (5) = 11.865 BETA (3) = 4.258 MACH = 1.0972 Q = 598.33 P = 710.00 RN/L = 3.1878

SECTION (1)LEFT WING TOP SURF DEPENDENT VARIABLE CP

2Y/BW	.2350	.2990	.3640	.4270	.5340	.6730	.7800	.8870	.9720	1.0000
X/CW										
.000	-.2140	-.6745	-.3523	-.4436	.0910	.0935	.0591	-.0659	-.7992	
.010		-.6499	-.6528		-.6378	-.5359	-.6294	-.7790		
.020		-.6458		.0000	-.7017	-.6697	-.7303	-.8207	-.7217	
.040			-.6248	-.1512						
.041	-.3295									
.050					-.7437	-.7845	-.8403	-.7906		
.069									-.7027	
.080					-.7338					
.081				-.2558						
.085			-.5451							
.094		-.7156								
.113	-.3283									
.150					-.6910	-.8569	-.8313	-.7776		
.157									-.6926	
.163			.0000							
.177				-.4367						
.229		-.8254								
.245			-.4304							
.247	-.3784									
.250					-.6204	-.8472	-.8095	-.7383		

AMES 11-073(OA148) -140A/B/C/R ORB LEFT WING TOP (XE8U59)

ALPHA (5) = 11.855 BETA (3) = 4.258

SECTION (1)LEFT WING TOP SURF DEPENDENT VARIABLE CP

2Y/BW	.2350	.2990	.3640	.4270	.5340	.6730	.7800	.8870	.9720	1.0000
X/CW										
.274				-.4407						
.345									-.6876	
.362		-.0268								
.390			-.4238							
.400					-.6407	-.7876		-.7229		
.402				-.5697						
.418										-.6845
.429	-.2057									
.497		-.3137								
.503									-.6916	
.547	-.1289									
.550					-.5090	-.7539				
.565				-.6402						
.600								-.7118		
.633	-.4671									
.637			-.4601							
.650							-.7306			
.670									-.6839	
.700		-.4344				-.6517				
.723										-.6537
.725					-.3001					
.727	-.4718									
.750							-.7479	-.6807		
.760				-.2527						
.775					-.5511	-.5957				
.793	-.0124									
.798			-.1822							
.808				-.4744						
.834		-.1685								
.839			-.3892							
.850					-.4620	-.4123	-.6742			
.857				-.4367						
.862									-.6331	
.865		-.3296								
.879			-.3147							
.900		-.2316			-.4922			-.6623		
.905				-.3879						
.919			-.2813							
.950					-.3816	-.2645	-.5801			
.953				-.4195						
.955			-.2884							
.965		-.2945								

AMES 11-073(OA148) -140A/B/C/R ORB LEFT WING TOP (XEBU60) (05 AUG 75)

REFERENCE DATA

SREF = 2690.0000 SQ.FT. XMRP = 1076.6800 IN. XO
LREF = 474.8000 IN. YMRP = .0000 IN. YO
BREF = 936.0880 IN. ZMRP = 375.0000 IN. ZO
SCALE = .0300

PARAMETRIC DATA

RUDDER = 10.000 SPDBRK = 55.000
BDFLAP = 16.300 L-ELVN = 4.000
R-ELVN = -4.000 MACH = .900

ALPHA (1) = -4.026 BETA (1) = -3.841 MACH = .89803 Q = 598.77 P = 1060.7 RN/L = 3.5631

SECTION (1)LEFT WING TOP SURF DEPENDENT VARIABLE CP

2Y/BW	.2350	.2990	.3640	.4270	.5340	.6730	.7800	.8870	.9720	1.0000
X/CW										
.000	-.4538	-.0457	-.1021	.1532	.4089	.3156	.2518	.2673	-1.0757	
.010		.0344	.0579		.6155	.5768	.5419	.4455		
.020		.0460		.0000	.5415	.4924	.4627	.4018	-.3282	
.040			.1624	.3901						
.041	-.0407									
.050					.3296	.2776	.2471	.1984		
.069									-.4594	
.080					.1357					
.081				.2626						
.086			.2879							
.094		.0543								
.113	.0391									
.150					-.0893	-.1303	-.1371	-.1884		
.157									-.5548	
.163			.0000							
.177				-.0086						
.229		.1624								
.246			.0784							
.247	.0753									
.250					-.2908	-.3412	-.3942	-.4991		
.274				-.1605						
.345									-.[illegible]807	
.362		.1539								
.390			-.1352							
.400					-.2153	-.3329		-.6372		
.402				-.1951						
.418										-.5174
.429	.1582									
.497		-.0822								
.503									-.2639	
.547	.0260									
.550					-.1694	-.3263				
.555				-.0503						
.600								-.2797		
.633	-.1080									
.637			.0069							
.650							-.2618			
.670									-.0607	

AMES 11-073(OA148) -140A/B/C/R ORB LEFT WING TOP (XEBU60)

ALPHA (1) = -4.026 BETA (1) = -3.841

SECTION (1)LEFT WING TOP SURF DEPENDENT VARIABLE CP

2Y/BW	.2350	.2990	.3640	.4270	.5340	.6730	.7800	.8870	.9720	1.0000
X/CW										
.700		.0477				-.1855				
.723										-.2526
.725					-.1842					
.727	.0225									
.750							-.1780	-.0692		
.760				-.2024						
.775					-.3847	-.2111				
.793	.1591									
.798			-.1782							
.808				-.1834						
.834		-.1778								
.839			-.1600							
.850					-.0072	-.0412	.0349			
.857				-.0391						
.862									.0411	
.865		-.3212								
.879			-.0464							
.900		-.1102			.0361			.0970		
.905				.0178						
.919			-.0045							
.950					.0938	.1022	.1211			
.953				.0621						
.955			.0405							
.965		.0251								

ALPHA (1) = -4.026 BETA (2) = .202 MACH = .89803 Q = 598.77 P = 1060.7 RN/L = 3.5631

SECTION (1)LEFT WING TOP SURF DEPENDENT VARIABLE CP

2Y/BW	.2350	.2990	.3640	.4270	.5340	.6730	.7800	.8870	.9720	1.0000
X/CW										
.000	-.4663	-.0025	-.0321	.1609	.3510	.2250	.1468	.1577	-.7189	
.010		.03[illegible]	.0663		.5475	.4991	.4637	.3807		
.020		.0333		.0000	.4825	.4292	.4011	.3433	-.4298	
.040			.1478	.3362						
.041	-.0796									
.050					.2925	.2456	.2160	.1658		
.069									-.4909	
.080					.1193					
.091				.2270						
.086			.2504							
.094		.0318								
.113	.0266									
.150					-.0847	-.1241	-.1241	-.1950		

AMES 11-073(OA148) -140A/B/C/R ORB LEFT WING TOP (XE8U60)

ALPHA (1) = -4.026 BETA (2) = .202

SECTION (1)LEFT WING TOP SURF DEPENDENT VARIABLE CP

2Y/BW	.2350	.2990	.3640	.4270	.5340	.6730	.7800	.8870	.9720	1.0000
X/CW										
.157									-.5421	
.163			.0000							
.177				-.0047						
.229		.1399								
.246			.0607							
.247	.0558									
.250					-.2655	-.3102	-.3665	-.5009		
.274				-.1490						
.345									-.4414	
.362		.1387								
.390			-.1257							
.400					-.2143	-.3239		-.5999		
.402				-.1940						
.418										-.3420
.429	.1371									
.497		-.0860								
.503									-.3295	
.547	.0148									
.550					-.2028	-.3543				
.565				-.0841						
.600								-.5080		
.633	-.1158									
.637			-.0324							
.650							-.4499			
.670									-.0843	
.700		.0115				-.3066				
.723										-.1933
.725					-.2662					
.727	-.0086									
.750							-.2051	-.1003		
.760				-.2575						
.775					-.5449	-.2891				
.793	.1154									
.798			-.2368							
.808				-.4551						
.834		-.2407								
.839			-.3239							
.850					-.0473	-.0847	.0018			
.857				-.0805						
.862									.0188	
.865		-.4787								
.879			-.1003							
.900		-.1715			.0102			.0644		
.905				-.0126						
.919			-.0421							

AMES 11-073(OA148) -140A/B/C/R ORB LEFT WING TOP (XEBU60)

ALPHA (1) = -4.026 BETA (2) = .202

SECTION (1)LEFT WING TOP SURF DEPENDENT VARIABLE CP

2Y/BW	.2350	.2990	.3640	.4270	.5340	.6730	.7800	.8870	.9720	1.0000
X/CW										
.950					.0750	.0679	.0964			
.953				.0443						
.955			.0172							
.965		-.0067								

ALPHA (1) = -3.984 BETA (3) = 4.285 MACH = .89803 Q = 598.77 P = 1060.7 RN/L = 3.5631

SECTION (1)LEFT WING TOP SURF DEPENDENT VARIABLE CP

2Y/BW	.2350	.2990	.3640	.4270	.5340	.6730	.7800	.8870	.9720	1.0000
X/CW										
.000	-.4865	.0205	.0233	.1787	.3024	.1577	.0665	.0715	-.6657	
.010		.0335	.0801		.4812	.4236	.3844	.3104		
.020		.0264		.0000	.4240	.3625	.3333	.2754	-.4811	
.040			.1430	.2811						
.041	-.1076									
.050					.2478	.1937	.1727	.1240		
.069									-.5578	
.080					.0892					
.081				.1891						
.086			.2216							
.094		.0214								
.113	.0060									
.150					-.0878	-.1320	-.1266	-.2102		
.157									-.5791	
.163			.0000							
.177				-.0136						
.229		.1203								
.246			.0455							
.247	.0526									
.250					-.2526	-.3000	-.3523	-.4845		
.274				-.1373						
.345									-.4560	
.362		.1187								
.390			-.1160							
.400					-.2192	-.3216		-.5978		
.402				-.1900						
.418										-.3708
.429	.1238									
.497		-.0924								
.503									-.4080	
.547	.0076									
.550					-.2298	-.3707				
.565				-.1113						

DATE 11 FEB 76 TABULATED PRESSURE DATA - OA148 (AMES 11-073-1)

AMES 11-073(OA148) -140A/B/C/R ORB LEFT WING TOP (XEBU80)

ALPHA (1) = -3.984 BETA (3) = 4.285

SECTION (1)LEFT WING TOP SURF DEPENDENT VARIABLE CP

2Y/BW	.2350	.2990	.3640	.4270	.5340	.6730	.7800	.8870	.9720	1.0000
X/CW										
.600								-.5807		
.633	-.1170									
.637			-.0676							
.650							-.4947			
.670									-.0924	
.700		-.0240				-.3536				
.723										-.1922
.725					-.3244					
.727	-.0387									
.750							-.2340	-.1307		
.760				-.2986						
.775					-.6301	-.3467				
.793	.0730									
.798			-.2831							
.808				-.6048						
.834		-.2895								
.839			-.5265							
.850					-.1128	-.1384	-.0525			
.857				-.1466						
.862									.0169	
.865		-.5420								
.879			-.1657							
.900		-.2155			-.0078			.0383		
.905				-.0321						
.919			-.0747							
.950					.0619	.0387	.0456			
.953				.0246						
.955			-.0154							
.965		-.0594								

ALPHA (2) = .058 BETA (1) = -3.856 MACH = .89813 Q = 598.75 P = 1080.5 RN/L = 3.5831

SECTION (1)LEFT WING TOP SURF DEPENDENT VARIABLE CP

2Y/BW	.2350	.2990	.3640	.4270	.5340	.6730	.7800	.8870	.9720	1.0000
X/CW										
.000	-.3621	.0487	.1101	.3754	.5466	.4849	.4504	.4550	-.3332	
.010		.0461	.1505		.4518	.4627	.4121	.2617		
.020		.0246		.0000	.3342	.2941	.2609	.1948	-.2878	
.040			.1888	.1988						
.041	-.1203									
.050					.0630	.0068	-.0213	-.0646		
.069									-.3812	
.080					-.1531					

AMES 11-073(OA148) -140A/B/C/R ORB LEFT WING TOP (XEBU60)

ALPHA (2) = .056 BETA (1) = -3.856

SECTION (1)LEFT WING TOP SURF DEPENDENT VARIABLE CP

2Y/BW	.2350	.2990	.3640	.4270	.5340	.6730	.7800	.8870	.9720	1.0000
X/CW										
.081				.0366						
.086			.2209							
.094		.0102								
.113	-.0280									
.150					-.3743	-.4305	-.4319	-.4474		
.157									-.6902	
.163			.0000							
.177				-.2446						
.229		.1026								
.246			-.0967							
.247	.0290									
.250					-.5180	-.6332	-.6665	-.6739		
.274				-.3907						
.345									-.7342	
.362		.0336								
.390			-.3368							
.400					-.3256	-.4987		-.9458		
.402				-.4267						
.418										-.3285
.429	.0940									
.497		-.2515								
.503									-.7587	
.547	-.1065									
.550					-.2176	-.3838				
.565				-.0947						
.600								-.1856		
.633	-.2957									
.637			-.0362							
.650							-.1253			
.670									-.2197	
.700		-.0017				-.1439				
.723										-.2537
.725					-.1710					
.727	-.0362									
.750							-.1045	-.0331		
.760				-.1746						
.775					-.2597	-.1631				
.793	.1197									
.738			-.1662							
.808				-.1460						
.834		-.1602								
.839			-.1388							
.850					.0169	.0139	.0767			
.857				-.0154						
.862									-.0636	

AMES 11-073(OA148) -140A/B/C/R ORB LEFT WING TOP (XEBU60)

ALPHA (2) = .056 BETA (1) = -3.856

SECTION (1)LEFT WING TOP SURF DEPENDENT VARIABLE CP

2Y/BW	.2350	.2990	.3640	.4270	.5340	.6730	.7800	.8870	.9720	1.0000
X/CW										
.865		-.2669								
.879			-.0339							
.900		-.0866			.0595			.1217		
.905				.0359						
.919			.0158							
.950					.1089	.1304	.1539			
.953				.0805						
.955			.0566							
.965		.0479								

ALPHA (2) = .056 BETA (2) = .186 MACH = .89813 Q = 598.75 P = 1060.5 RN/L = 3.5631

SECTION (1)LEFT WING TOP SURF DEPENDENT VARIABLE CP

2Y/BW	.2350	.2990	.3640	.4270	.5340	.6730	.7800	.8870	.9720	1.0000
X/CW										
.000	-.4054	.0125	.0895	.3480	.4946	.4124	.3756	.3709	-.3648	
.010		.0027	.1193		.3700	.3784	.3326	.1921		
.020		-.0103		.0000	.2576	.2219	.1984	.1335	-.3643	
.040			.1541	.1439						
.041	-.1945									
.050					.0142	-.0450	-.0634	-.1044		
.069									-.4364	
.080					-.1731					
.081				.0043						
.088			.1604							
.094		-.0136								
.113	-.0387									
.150					-.3674	-.4132	-.4313	-.4634		
.157									-.7195	
.163			.0000							
.177				-.2485						
.229		.0824								
.246			-.1125							
.247	.0108									
.250					-.4887	-.6082	-.6812	-.6949		
.274				-.3674						
.345									-.7233	
.352		.0186								
.390			-.3248							
.400					-.3195	-.4265		-.9045		
.402				-.3856						
.418										-.3910
.429	.0762									

AMES 11-073(OA148) -140A/B/C/R ORB LEFT WING TOP (XE8U60)

ALPHA (2) = .056 BETA (2) = .185

SECTION (1)LEFT WING TOP SURF DEPENDENT VARIABLE CP

2Y/BW	.2350	.2990	.3640	.4270	.5340	.6730	.7800	.8870	.9720	1.0000
X/CW										
.497		-.2543								
.503									-.7576	
.547	-.1206									
.550					-.2523	-.4258				
.565				-.1330						
.600								-.3656		
.633	-.2878									
.637			-.0785							
.650							-.4009			
.670									-.1826	
.700		-.0437				-.2696				
.723										-.3853
.725					-.2809					
.727	-.0704									
.750							-.0991	-.0342		
.760				-.2348						
.775					-.4151	-.2038				
.793	.0698									
.798			-.2122							
.808				-.2407						
.834		-.2223								
.839			-.2309							
.850					-.0307	-.0329	.0614			
.857				-.0713						
.862									-.0188	
.865		-.3756								
.874			-.0892							
.900		-.1486			.0297			.1247		
.905				-.0006						
.919			-.0262							
.950					.0896	.1072	.1399			
.953				.0508						
.955			.0263							
.965		.0036								

AMES 11-073(OA148) -140A/B/C/R ORB LEFT WING TOP (XEBU60)

ALPHA (2) = .048 BETA (3) = 4.260 MACH = .89813 Q = 598.75 P = 1060.5 RN/L = 3.5631

SECTION ( )LEFT WING TOP SURF DEPENDENT VARIABLE CP

2Y/BW	.2350	.2990	.3540	.4270	.5340	.6730	.7800	.6870	.9720	1.0000
X/CW										
.000	-.4360	-.0361	.0588	.3113	.4485	.3577	.3153	.3054	-.3361	
.010		-.0430	.0867		.2875	.2919	.2442	.1040		
.020		-.0439		.0000	.1879	.1446	.1099	.0455	-.4088	
.040			.1208	.0983						
.041	-.2357									
.050					-.0330	-.0920	-.1225	-.1802		
.069									-.4879	
.080					-.2073					
.091				-.0210						
.086			.1456							
.094		-.0235								
.113	-.0453									
.150					-.3702	-.4227	-.4440	-.4940		
.157									-.7493	
.163			.0000							
.177				-.2343						
.229		.0702								
.246			-.1197							
.247	.0035									
.250					-.4840	-.5942	-.6550	-.7121		
.274				-.3098						
.345									-.6421	
.352		.0153								
.390			-.2706							
.400					-.3110	-.4390		-.7666		
.402				-.3633						
.418										-.4926
.429	.0634									
.497		-.2343								
.503									-.5904	
.547	-.1209									
.550					-.2806	-.4490				
.565				-.1611						
.600								-.5655		
.633	-.2591									
.637			-.1111							
.650							-.5288			
.670									-.1621	
.700		-.0709				-.3560				
.723										-.4270
.725					-.3275					
.727	-.0325									
.750							-.1583	-.0644		
.750				-.2868						
.775					-.6409	-.2618				

DATE 11 FEB 76 TABULATED PRESSURE DATA - OA148 (AMES 11-073-1)

AMES 11-073(OA148) -140A/B/C/R ORB LEFT WING TOP (XEBU60) PAGE 4753

ALPHA (2) = .048 BETA (3) = 4.260

SECTION (1)LEFT WING TOP SURF DEPENDENT VARIABLE CP

2Y/BW	.2350	.2990	.3640	.4270	.5340	.6730	.7800	.8870	.9720	1.0000
X/CW										
.793	.0307									
.798			-.2552							
.808				-.5190						
.834		-.2731								
.839			-.4005							
.850					-.0853	-.1209	-.0045			
.857				-.1449						
.862									-.0129	
.865		-.4888								
.879			-.1636							
.900		-.2480								
.905					-.0153			.1085		
.919				-.0507						
.950			-.0713							
.953					.0482	.0485	.0998			
.955				.0172						
.965		-.0707	-.0159							

ALPHA (3) = 3.975 BETA (1) = -3.861 MACH = .89723 Q = 597.99 P = 1061.2 RN/L = 3.5507

SECTION (1)LEFT WING TOP SURF DEPENDENT VARIABLE CP

2Y/BW	.2350	.2990	.3640	.4270	.5340	.6730	.7800	.8870	.9720	1.0000
X/CW										
.000	-.2958	-.0393	.0585	.4070	.6069	.5723	.5453	.4840	-.2009	
.010		-.0861	.0659		.1619	.2019	.1014	-.1386		
.020		-.0878		.0000	.0283	-.0194	-.0866	-.2184	-.5414	
.040			.1023	-.0473						
.041	-.1744									
.050										
.069					-.2511	-.3362	-.3905	-.4931		
.080										
.081					-.4724				-.6380	
.096				-.2229						
.094			.0974							
.113	-.0967	-.0591								
.150										
.157					-.7050	-.7372	-.7337	-.7346		
.163										
.177			.0000						-.9079	
.229				-.4681						
.245		.0490								
.247	-.0108		-.2715							
.250										
					-.7601	-.9249	-.9693	-.8191		

AMES 11-073(OA148) -140A/B/C/R ORB LEFT WING TOP (XEBU60)

ALPHA (3) = 3.975 BETA (1) = -3.861

SECTION (1)LEFT WING TOP SURF DEPENDENT VARIABLE CP

2Y/BW	.2350	.2990	.3640	.4270	.5340	.6730	.7800	.8870	.9720	1.0000
X/CW										
.274				-.5978						
.345									-.7069	
.352		-.0722								
.330			-.5445							
.400					-.8426	-.9355		-.6193		
.402				-.7174						
.418										-.7784
.429	.0443									
.497		-.4266								
.503									-.5314	
.547	-.2108									
.550					-.1757	-.3364				
.585				-.1353						
.600								-.4922		
.633	-.5138									
.637			-.0779							
.650							-.4284			
.670									-.4578	
.700		-.0809				-.1891				
.723										-.8144
.725					-.1378					
.727	-.1398									
.750							-.2972	-.3375		
.760				-.1434						
.775					-.2332	-.1962				
.793	.1316									
.798			-.1261							
.808				-.1277						
.834		-.1297								
.839			-.1115							
.850					-.0035	-.0265	-.1491			
.857				-.0178						
.862									-.3605	
.865		-.2494								
.873			-.0213							
.900		-.0743			.0453			-.2025		
.905				.0377						
.919			.0219							
.950					.1054	.1016	-.0028			
.953				.0829						
.955			.0657							
.965		.0597								

AMES 11-073(OA148) -140A/B/C/R ORB LEFT WING TOP (XEBU60)

ALPHA (3) = 4.019 BETA (2) = .193 MACH = .89723 Q = 597.99 P = 1061.2 RN/L = 3.5607

SECTION (1)LEFT WING TOP SURF DEPENDENT VARIABLE CP

2Y/BW	.2350	.2990	.3640	.4270	.5340	.6730	.7800	.8870	.9720	1.0000
X/CW										
.000	-.3625	-.1456	-.0561	.3054	.5209	.4790	.4502	.3788	-.3383	
.010		-.1821	-.0168		.0517	.0383	-.0135	-.2477		
.020		-.1608		.0000	-.0582	-.1197	-.1883	-.3172	-.6465	
.040			.0389	-.1123						
.041	-.3914									
.050					-.3127	-.4025	-.4672	-.5640		
.069									-.7148	
.080					-.5101					
.081				-.2693						
.085			.0500							
.094		-.0844								
.113	-.1050									
.150					-.7162	-.7646	-.7613	-.7798		
.157									-.9491	
.163			.0000							
.177				-.4839						
.229		.0311								
.246			-.2800							
.247	-.0296									
.250					-.7523	-.9079	-.9802	-.8858		
.274				-.5845						
.345									-.7117	
.362		-.0868								
.390			-.5348							
.400					-.7778	-.9659		-.6840		
.402				-.6968						
.418										-.9815
.479	.0199									
.497		-.4285								
.503									-.5510	
.547	-.2270									
.550					-.2662	-.1874				
.565				-.1846						
.600								-.5080		
.633	-.5167									
.637			-.1283							
.650							-.4041			
.670									-.3881	
.700		-.1207				-.2026				
.723										-.7283
.725					-.1822					
.727	-.1550									
.750							-.2670	-.3383		
.760				-.1859						
.775					-.2990	-.2097				

AMES 11-073(OA148) -140A/B/C/R ORB LEFT WING TOP (XEBU60)

ALPHA (3) = 4.019 BETA (2) = .193

SECTION (1)LEFT WING TOP SURF DEPENDENT VARIABLE CP

2Y/BW	.2350	.2990	.3640	.4270	.5340	.6730	.7800	.8870	.9720	1.0000
X/CW										
.793	.0788									
.798			-.1792							
.808				-.2080						
.834		-.1892								
.839			-.1984							
.850					-.0354	-.0629	-.0806			
.857				-.0694						
.862									-.3245	
.865		-.3697								
.879			-.0774							
.900		-.1399			.0213			-.1839		
.905				.0018						
.919			-.0216							
.950					.0964	.0800	.0473			
.953				.0620						
.955			.0353							
.965		.0145								

ALPHA (3) = 3.944 BETA (3) = 4.252 MACH = .89723 Q = 597.99 P = 1081.2 RN/L = 3.5607

SECTION (1)LEFT WING TOP SURF DEPENDENT VARIABLE CP

2Y/BW	.2350	.2990	.3640	.4270	.5340	.6730	.7800	.8870	.9720	1.0000
X/CW										
.000	-.4217	-.2646	-.1604	.1948	.4259	.3822	.3469	.2630	-.5347	
.010		-.2589	-.0738		-.0685	-.0327	-.1478	-.3795		
.020		-.2016		.0000	-.1609	-.2215	-.3031	-.4648	-.7797	
.040			.0090	-.1659						
.041	-.4939									
.050					-.3762	-.4731	-.5477	-.6516		
.069									-.8074	
.080					-.5368					
.081				-.2904						
.085			.0232							
.094		-.0960								
.113	-.1145									
.150					-.7144	-.7857	-.7956	-.8280		
.157									-1.0130	
.163			.0000							
.177				-.4781						
.209		.0018								
.245			-.2694							
.247	-.0333									
.250					-.7243	-.8320	-.9872	-1.0049		

AMES 11-073(OA148) -140A/B/C/R ORB LEFT WING TOP (XE8U60)

ALPHA (3) = 3.944 BETA (3) = 4.252

SECTION (1)LEFT WING TOP SURF DEPENDENT VARIABLE CP

2Y/BW	.2350	.2990	.3640	.4270	.5340	.6730	.7800	.8870	.9720	1.0000
X/CW										
.274				-.5668						
.345									-.7019	
.362		-.0927								
.390			-.4940							
.400					-.6052	-.9118		-.9840		
.402				-.6151						
.418										-.7221
.429	.0152									
.497		-.4230								
.503									-.6692	
.547	-.2199									
.550					-.3234	-.4643				
.555				-.2317						
.600								-.5377		
.633	-.4767									
.637			-.1840							
.650							-.2871			
.670									-.4688	
[illegible]		-.1209				-.2104				
.723										-.4680
.725					-.2607					
.727	-.1597									
.750							-.2130	-.3302		
.760				-.2610						
.775					-.3001	-.2151				
.793	.0195									
.798			-.2582							
.808				-.3474						
.834		-.2703								
.839			-.3826							
.840					-.0824	-.0771	.0018			
.857				-.1295						
.862									-.3673	
.865		-.4955								
.879			-.1315							
.900		-.2128			-.0317			-.1085		
.905				-.0573						
.919			-.0811							
.950					.0320	.0409	.1027			
.953				.0103						
.955			-.0272							
.965		-.0705								

AMES 11-073(OA148) -140A/B/C/R ORB LEFT WING TOP (XCBU60)

ALPHA (4) = 8.020 BETA (1) = -3.857 MACH = .89903 Q = 599.30 P = 1059.3 RN/L = 3.5654

SECTION (1)LEFT WING TOP SURF DEPENDENT VARIABLE CP

2Y/BW	.2350	.2990	.3640	.4270	.5340	.6730	.7800	.8870	.9720	1.0000
XCW										
.000	-.2669	-.2992	-.2827	.2016	.4790	.4554	.4164	.2809	-.6011	
.010		-.3786	-.2162		-.2879	-.1902	-.3357	-.5912		
.020		-.3196		.0000	-.3845	-.4136	-.4967	-.6940	-1.1089	
.040			-.1097	-.3914						
.041	-.2001									
.050					-.5999	-.6573	-.7587	-.8956		
.059									-1.0816	
.060					-.7846					
.081				-.5470						
.086			-.0825							
.094		-.1473								
.113	-.1698									
.150					-.9961	-1.0485	-.9403	-.8859		
.157									-1.0731	
.163			.0000							
.177				-.6713						
.229		-.0077								
.246			-.4287							
.247	-.0761									
.250					-1.0131	-1.0426	-.8056	-.7246		
.274				-.7698						
.345									-.7255	
.362		-.1686								
.390			-.6631							
.400					-.8340	-.7634		-.6007		
.402				-.9077						
.418										-.9153
.429	-.0057									
.497		-.5412								
.503									-.6108	
.547	-.3346									
.550					-.4149	-.6486				
.565				-.3097						
.600								-.5253		
.633	-.6884									
.637			-.1134							
.650							-.5692			
.670									-.4947	
.700		-.1466				-.5004				
.723										-.6537
.725					-.2613					
.727	-.1773									
.750							-.4879	-.4341		
.762				-.1820						
.775					-.3676	-.4098				

AMES 11-073(OA148) -140A/B/C/R ORB LEFT WING TOP (XEBU60)

ALPHA (4) = 8.020 BETA (1) = -3.857

SECTION (1)LEFT WING TOP SURF DEPENDENT VARIABLE CP

2Y/BW	.2350	.2990	.3640	.4270	.5340	.6730	.7800	.8870	.9720	1.0000
X/CW										
.793	.1480									
.799			-.1666							
.808				-.2431						
.834		-.1717								
.839			-.2530							
.850					-.1146	-.2681	-.4317			
.857				-.0870						
.862									-.4282	
.865		-.5087								
.879			-.1363							
.900		-.1388			-.0604			-.3967		
.905				-.0246						
.919			-.0978							
.950					.0221	-.1354	-.3500			
.953				.0359						
.955			-.0235							
.965		.0059								

ALPHA (4) = 8.028 BETA (2) = .194 MACH = .89903 Q = 599.30 P = 1059.3 RN/L = 3.5654

SECTION (1)LEFT WING TOP SURF DEPENDENT VARIABLE CP

2Y/BW	.2350	.2990	.3640	.4270	.5340	.6730	.7800	.8870	.9720	1.0000
X/CW										
.000	-.3548	-.5012	-.3974	.0227	.3385	.3145	.2698	.1388	-.7353	
.010		-.4843	-.1985		-.4252	-.3399	-.4946	-.7353		
.020		-.3595		.0000	-.4964	-.5314	-.6178	-.8118	-.6663	
.040			-.0827	-.4437						
.041	-.4055									
.050					-.6711	-.7524	-.8523	-.9966		
.069									-.5976	
.080					-.8325					
.081				-.5844						
.086			-.0770							
.094		-.2046								
.113	-.2112									
.150					-.9748	-1.0849	-.9679	-.9995		
.157									-.5609	
.163			.0000							
.177				-.6631						
.229		-.1306								
.245			-.4238							
.247	-.0645									
.250					-.9993	-1.0796	-.8577	-.8907		

AMES 11-073(OA148) -140A/B/C/R ORB LEFT WING TOP (XEBU60)

ALPHA (4) = 9.028 BETA (2) = .194

SECTION (1)LEFT WING TOP SURF DEPENDENT VARIABLE CP

2Y/BW	.2350	.2990	.3540	.4270	.5340	.6730	.7800	.8870	.9720	1.0000
X/CW										
.274				-.7399						
.345									-.5433	
.362		-.1847								
.339			-.6615							
.400					-.3548	-.8191		-.6306		
.402				-.8752						
.418										-.5356
.422	-.0117									
.497		-.5671								
.503									-.5384	
.547	-.3506									
.550					-.4203	-.6610				
.565				-.2434						
.600								-.5624		
.633	-.7062									
.637			-.1680							
.650							-.5638			
.670									-.4995	
.700		-.1626				-.4975				
.723										-.7588
.725					-.2632					
.727	-.2415									
.750							-.4801	-.5161		
.760				-.2138						
.775					-.5188	-.4109				
.793	.0607									
.798			-.2269							
.808				-.3780						
.834		-.2060								
.849			-.3757							
.850					-.1272	-.2509	-.4259			
.857				-.1338						
.862									-.4045	
.865		-.4715								
.879			-.1812							
.900		-.1984			-.0678			-.4770		
.905				-.0744						
.919			-.1066							
.950					.0102	-.1009	-.3565			
.953				-.0012						
.955			-.0306							
.965		-.0560								

AMES 11-073(OA148) -140A/B/C/R ORB LEFT WING TOP (XEBU60)

ALPHA (4) = 8.024 BETA (3) = 4.248 MACH = .89903 Q = 599.30 P = 1059.3 RN/L = 3.5654

SECTION (1)LEFT WING TOP SURF DEPENDENT VARIABLE CP

2Y/BW	.2350	.2990	.3640	.4270	.5340	.6730	.7800	.8870	.9720	1.0000
X/CW										
.000	-.4421	-.5949	-.2416	-.1415	.1850	.1676	.1084	-.0273	-.7267	
.010		-.3821	-.1775		-.5509	-.5080	-.6668	-.9014		
.020		-.3314		.0000	-.6263	-.6578	-.7793	-.9718	-.6677	
.040			-.1590	-.4077						
.041	-.5122									
.050					-.7193	-.8501	-.9598	-1.1003		
.069									-.6260	
.080					-.8397					
.081				-.4820						
.086			-.1595							
.094		-.3219								
.113	-.2061									
.150					-.9228	-1.1179	-1.0525	-1.0366		
.157									-.5825	
.163			.0000							
.177				-.5974						
.229		-.2507								
.246			-.5230							
.247	-.0840									
.250					-.9200	-1.1001	-.9165	-.8148		
.274				-.6980						
.345									-.5739	
.362		-.1188								
.390			-.7006							
.400					-.8809	-.8622		-.6152		
.402				-.8331						
.418										-.5579
.429	-.0281									
.497		-.5445								
.503									-.5645	
.547	-.3399									
.550					-.3931	-.6307				
.565				-.2428						
.600								-.5892		
.633	-.6575									
.637			-.2160							
.650							-.5947			
.670									-.5242	
.700		-.1860				-.4430				
.723										-.6962
.725					-.2393					
.727	-.2707									
.750							-.5246	-.5378		
.760				-.2702						
.775					-.6536	-.4551				

ORIGINAL PAGE IS OF POOR QUALITY

AMES 11-073(OA148) -140A/B/C/R ORB LEFT WING TOP (XEBU60)

ALPHA (4) = 8.024 BETA (3) = 4.248

SECTION (1)LEFT WING TOP SURF DEPENDENT VARIABLE CP

2Y/BW	.2350	.2990	.3640	.4270	.5340	.6730	.7800	.8870	.9720	1.0000
X/CW										
.793	-.0061									
.798			-.2260							
.808				-.6599						
.834		-.2272								
.839			-.4996							
.850					-.1736	-.2374	-.4779			
.857				-.2700						
.862									-.4474	
.865		-.4647								
.879			-.2411							
.900		-.2791			-.0761			-.4933		
.905				-.1625						
.919			-.1252							
.950					.0120	-.0976	-.3813			
.953				-.0601						
.955			-.0640							
.965		-.0326								

ALPHA (5) = 11.919 BETA (1) = -3.839 MACH = .89963 Q = 599.94 P = 1059.0 RN/L = 3.5645

SECTION (1)LEFT WING TOP SURF DEPENDENT VARIABLE CP

2Y/BW	.2350	.2990	.3640	.4270	.5340	.6730	.7800	.8870	.9720	1.0000
X/CW										
.000	-.2882	-.6931	-.5498	-.1841	.2227	.2033	.1535	.0038	-.7735	
.010		-.6917	-.2697		-.7015	-.6112	-.7726	-.8786		
.020		-.5892		.0000	-.8302	-.8001	-.9158	-.7548	-.6809	
.040			-.1917	-.6612						
.041	-.2756									
.050					-.9660	-1.0096	-1.0896	-.8310		
.069									-.6196	
.080					-1.0587					
.081				-.7470						
.086			-.1858							
.094		-.3573								
.118	-.2516									
.150					-1.1871	-1.0350	-1.0233	-.7075		
.157									-.5886	
.163			.0000							
.177				-.8029						
.229		-.2477								
.245			-.5562							
.247	-.1107									
.250					-1.0516	-.9252	-.9002	-.6786		

AMES 11-073(OA148) -140A/B/C/R ORB LEFT WING TOP (XEBU60)

ALPHA (5) = 11.919 BETA (1) = -3.839

SECTION (1)LEFT WING TOP SURF DEPENDENT VARIABLE CP

2Y/BW	.2350	.2990	.3640	.4270	.5340	.6730	.7800	.8870	.9720	1.0000
X/CW										
.274				-.8575						
.345									-.5822	
.362		-.3849								
.390			-.7676							
.400					-.8314	-.8432		-.6242		
.402				-.9030						
.418										-.5692
.429	-.0369									
.497		-.7646								
.503									-.5817	
.547	-.4815									
.550					-.7159	-.6837				
.565				-.4742						
.600								-.6133		
.633	-.8279									
.637			-.3038							
.650							-.6577			
.670									-.5420	
.700		-.2318				-.6441				
.723										-.5868
.725					-.4571					
.727	-.2462									
.750							-.6137	-.5702		
.760				-.2919						
.775					-.5198	-.5749				
.793	.0501									
.798			-.2903							
.808				-.4981						
.834		-.2605								
.839			-.6439							
.850					-.3215	-.4853	-.5812			
.857				-.2632						
.862									-.5152	
.865		-.4945								
.879			-.2780							
.900		-.2593			-.2826			-.5451		
.905				-.1993						
.919			-.2161							
.950					-.1886	-.3967	-.5490			
.953				-.1385						
.955			-.1334							
.965		-.0868								

AMES 11-073(OA148) -140A/B/C/R ORB LEFT WING TOP (XEBUBO)

ALPHA (5) = 11.929 BETA (2) = .180 MACH = .89963 Q = 599.94 P = 1059.0 RN/L = 3.5645

SECTION (1)LEFT WING TOP SURF DEPENDENT VARIABLE CP

2Y/BW	.2350	.2990	.3640	.4270	.5340	.6730	.7800	.8870	.9720	1.0000
X/CW										
.000	-.3977	-.7754	-.3357	-.3672	.0486	.0339	-.0241	-.1683	-.7932	
.010		-.5356	-.2808		-.8600	-.7579	-.9105	-.9096		
.020		-.4834		.0000	-.9615	-.9449	-1.0542	-.7315	-.6995	
.040			-.2691	-.5532						
.041	-.4548									
.050					-1.0721	-1.1111	-1.1161	-.7024		
.069									-.6571	
.080					-1.1197					
.081				-.6297						
.086			-.2672							
.094		-.4640								
.113	-.2809									
.150					-1.2103	-1.0593	-1.0374	-.6884		
.157									-.6277	
.163			.0000							
.177				-.7361						
.229		-.5761								
.246			-.5783							
.247	-.1643									
.250					-1.0076	-.9416	-.9402	-.6870		
.274				-.8396						
.345									-.6154	
.362		-.2926								
.390			-.7777							
.400					-.8223	-.8360		-.6609		
.402				-.9592						
.418										-.6197
.429	-.0688									
.407		-.7384								
.503									-.6168	
.547	-.4998									
.550					-.6731	-.7377				
.565				-.3786						
.600								-.6348		
.633	-.8451									
.637			-.3276							
.650							-.6846			
.670									-.5500	
.700		-.2557				- 6285				
.723										-.5638
.725					-.4057					
.727	-.2895									
.750							-.6365	-.5919		
.760				-.3156						
.775					-.6580	-.5651				

AMES 11-073(OA148) -140A/B/C/R ORB LEFT WING TOP (XEBL60)

ALPHA (5) = 11.929 BETA (2) = .180

SECTION (1)LEFT WING TOP SURF DEPENDENT VARIABLE CP

2Y/BW	.2350	.2990	.3640	.4270	.5340	.6730	.7800	.8870	.9720	1.0000
X/CW										
.793	.0337									
.798			-.3001							
.808				-.7256						
.834		-.2720								
.839			-.6174							
.850					-.3009	-.4573	-.6168			
.857				-.3882						
.862									-.5237	
.865		-.4893								
.879			-.4455							
.900		-.4057			-.2559			-.5742		
.905				-.2832						
.919			-.2236							
.950					-.1538	-.3529	-.5684			
.953				-.2014						
.955			-.1531							
.965		-.1253								

ALPHA (5) = 11.915 BETA (3) = 4.268 MACH = .89963 Q = 599.94 P = 1059.0 RN/L = 3.5645

SECTION (1)LEFT WING TOP SURF DEPENDENT VARIABLE CP.

2Y/BW	.2350	.2990	.3640	.4270	.5340	.6730	.7800	.8870	.9720	1.0000
X/CW										
.000	-.5010	-.7444	-.3654	-.5194	-.1242	-.1424	-.2040	-.3437	-.7883	
.010		-.6221	-.3332		-.9943	-.9122	-1.0439	-.8092		
.020		-.6181		.0000	-1.0832	-1.0768	-1.1489	-.8111	-.7122	
.040			-.3282	-.4481						
.041	-.6163									
.050					-1.1284	-1.1155	-1.0702	-.7390		
.069									-.6662	
.080					-1.1105					
.081				-.5599						
.086			-.3021							
.094		-.5859								
.113	-.2393									
.150					-1.0960	-.8685	-.9259	-.7205		
.157									-.6527	
.163			.0000							
.177				-.6709						
.229		-.6385								
.246			-.6065							
.247	-.2204									
.250					-.8363	-.8157	-.8550	-.7182		

AMES 11-073(OA148) -140A/B/C/R ORB LEFT WING TOP (XEBU60)

ALPHA (5) = 11.915 BETA (3) = 4.268

SECTION (1)LEFT WING TOP SURF DEPENDENT VARIABLE CP

2Y/BW	.2350	.2990	.3640	.4270	.5340	.6730	.7800	.8870	.9720	1.0000
X/CW										
.274				-.8007						
.345									-.6434	
.362		-.2991								
.390			-.8009							
.400					-.7160	-.8495		-.7096		
.402				-.7581						
.418										-.6430
.429	-.1034									
.497		-.7140								
.503									-.6620	
.547	-.4716									
.550					-.6398	-.7542				
.565				-.4100						
.600								-.6616		
.633	-.8268									
.637			-.3203							
.650							-.7089			
.670									-.6193	
.700		-.1879				-.6475				
.723										-.6051
.725					-.4203					
.727	-.2190									
.750							-.6836	-.6352		
.760				-.4140						
.775					-.8879	-.6323				
.793	.0039									
.798			-.3626							
.808				-.7721						
.834		-.3168								
.849			-.6959							
.850					-.5469	-.4373	-.6508			
.857				-.7306						
.862									-.5811	
.865		-.5807								
.879			-.5414							
.900		-.4994			-.3038			-.6227		
.905				-.5646						
.919			-.5187							
.950					-.1927	-.3292	-.5968			
.953				-.2327						
.955			-.2297							
.965		-.2975								

AMES 11-073(OA148) -140A/B/C/R ORB LEFT WING TOP (XEBU61) (05 AUG 75)

REFERENCE DATA

SREF = 2690.0000 SQ.FT. XMRP = 1076.6800 IN. XO
LREF = 474.8000 IN. YMRP = .0000 IN. YO
BREF = 936.0680 IN. ZMRP = 375.0000 IN. ZO
SCALE = .0300

PARAMETRIC DATA

RUDDER = 10.000 SPDBRK = 55.000
BDFLAP = 16.000 L-ELVN = 4.000
R-ELVN = -4.000 MACH = .5[illegible]0

ALPHA (1) = -4.014 BETA (1) = -7.854 MACH = .59538 Q = 594.21 P = 2386.5 RN/L = 4.8411

SECTION (1)LEFT WING TOP SURF DEPENDENT VARIABLE CP

2Y/BW	.2350	.2990	.3540	.4270	.5340	.6730	.7800	.8870	.9720	1.0000
X/CW										
.000	-.1537	-.1385	-.2788	-.0989	.1184	.0393	-.0015	.0998	-.8286	
.010		-.0051	-.0439		.6030	.5951	.5772	.5180		
.020		.0307		.0000	.5481	.5375	.5144	.4709	-.1062	
.040			.1116	.3621						
.041	.0351									
.050					.3214	.3125	.2833	.2529		
.069									-.1181	
.080					.1336					
.081				.2269						
.086			.2500							
.094		.0603								
.113	.0495									
.150					-.0935	-.1169	-.1207	-.1357		
.157									-.1718	
.163			.0000							
.177				-.0243						
.229		.1514								
.246			.0379							
.247	.0753									
.250					-.2394	-.2890	-.3289	-.3679		
.274				-.1510						
.345									-.1675	
.382		.1077								
.390			-.1174							
.400					-.1883	-.2637		-.3347		
.402				-.1600						
.418										-.4799
.429	.1244									
.497		-.0819								
.503									-.2300	
.547	.0020									
.550					-.1204	-.1865				
.585				-.0371						
.600								-.2306		
.633	-.0302									
.637			.0066							
.650							-.1755			
.670									-.1571	

AMES 11-073(OA148) -140A/B/C/R ORB LEFT WING TOP (XEBUS1)

ALPHA (1) = -4.014 BETA (1) = -7.854

SECTION (1)LEFT WING TOP SURF DEPENDENT VARIABLE CP

2Y/BW	.2350	.2990	.3640	.4270	.5340	.6730	.7800	.8870	.9720	1.0000
X/CW										
.700		.0481				-.1291				
.723										-.2424
.725					-.1074					
.727	.0183									
.750							-.1361	-.0997		
.760				-.1402						
.775					-.1863	-.1317				
.793	.1540									
.799			-.1174							
.809				-.0744						
.834		-.1072								
.839			-.0460							
.850					.0129	-.0009	.0180			
.857				-.0023						
.862									-.0200	
.865		-.1637								
.879			-.0040							
.900		-.0411			.0172			.0510		
.905				.0122						
.919			-.0005							
.950					.0603	.0689	.0844			
.953				.0405						
.955			.0194							
.965		.0198								

ALPHA (1) = -3.938 BETA (2) = -3.832 MACH = .59638 Q = 594.21 P = 2388.5 RN/L = 4.8411

SECTION (1)LEFT WING TOP SURF DEPENDENT VARIABLE CP

2Y/BW	.2350	.2990	.3640	.4270	.5340	.6730	.7800	.8870	.9720	1.0000
X/CW										
.000	-.1495	-.0926	-.1911	-.0531	.0968	-.0151	-.0652	.0157	-.7734	
.010		-.0037	-.0219		.5397	.5278	.5089	.4536		
.020		.0162		.0000	.4918	.4774	.4510	.4101	-.1809	
.040			.0942	.3155						
.041	-.0074									
.050					.2851	.2684	.2447	.2092		
.059									-.1788	
.080					.1030					
.081				.1956						
.095			.2282							
.094		.0273								
.113	.0170									
.150					-.1101	-.1257	-.1175	-.1510		

AMES 11-073(OA148) -140A/B/C/R OR3 LEFT WING TOP (XEBU61)

ALPHA (1) = -3.998 BETA (2) = -3.832

SECTION (1)LEFT WING TOP SURF DEPENDENT VARIABLE CP

2Y/BW	.2350	.2990	.3640	.4270	.5340	.6730	.7800	.8870	.9720	1.0000
X/CW										
.157									-.2017	
.163			.0000							
.177				-.0399						
.225		.1238								
.246			.0149							
.247	.0519									
.250					-.2545	-.2988	-.3327	-.3693		
.274				-.1640						
.345									-.1769	
.352		.0850								
.390			-.1339							
.400					-.2157	-.2815		-.3393		
.402				-.1820						
.418										-.4654
.423	.0993									
.497		-.1026								
.503									-.2231	
.547	-.0225									
.550					-.1539	-.2137				
.565				-.0762						
.600								-.2332		
.633	-.1100									
.637			-.0327							
.650							-.1825			
.670									-.1399	
.700		.0050				-.1407				
.723										-.2533
.725					-.1357					
.727	-.0203									
.750							-.1509	-.1011		
.760				-.1595						
.775					-.2200	-.1502				
.793	.1165									
.798			-.1202							
.808				-.1095						
.834		-.1318								
.839			-.0850							
.850					-.0120	-.0158	.0097			
.857				-.0234						
.862									-.0055	
.865		-.2008								
.879			-.0297							
.900		-.0693			.0030			.0528		
.905				-.0045						
.919			-.0186							

AMES 11-073(OA148) -140A/B/C/R ORB LEFT WING TOP (XEBUB1)

ALPHA (1) = -3.998 BETA (2) = -3.832

SECTION (1)LEFT WING TOP SURF DEPENDENT VARIABLE CP

2Y/BW	.2350	.2990	.3640	.4270	.5340	.6730	.7800	.8870	.9720	1.0000
X/CW										
.950					.0528	.0653	.0840			
.953				.0346						
.955			.0091							
.965		-.0032								

ALPHA (1) = -3.980 BETA (3) = .201 MACH = .59638 Q = 594.21 P = 2386.5 RN/L = 4.8411

SECTION (1)LEFT WING TOP SURF DEPENDENT VARIABLE CP

2Y/BW	.2350	.2990	.3640	.4270	.5340	.6730	.7800	.8870	.9720	1.0000
X/CW										
.000	-.1537	-.0480	-.1040	.0133	.0863	-.0417	-.1381	-.0602	-.7286	
.010		-.0028	.0035		.4761	.4520	.4303	.3840		
.020		.0034		.0000	.4253	.4100	.3866	.3493	-.2406	
.040			.0827	.2593						
.041	-.0574									
.050					.2348	.2242	.2022	.1705		
.069									-.2273	
.080					.0651					
.081				.1642						
.026			.1917							
.094		.0027								
.113	-.0182									
.150					-.1228	-.1456	-.1268	-.1592		
.157									-.2257	
.163			.0000							
.177				-.0565						
.229		.0995								
.246			-.0029							
.247	.0258									
.250					-.2602	-.2968	-.3349	-.3658		
.274				-.1749						
.345									-.1807	
.362		.0671								
.390			-.1500							
.400					-.2362	-.2933		-.3387		
.402				-.2051						
.418										-.4348
.429	.0735									
.497		-.1200								
.503									-.2079	
.547	-.0446									
.550					-.1336	-.2294				
.565				-.1178						

AMES 11-073(OA148) -140A/B/C/R ORB LEFT WING TOP (XE8U61)

ALPHA (1) = -3.980 BETA (3) = .201

SECTION (1)LEFT WING TOP SURF DEPENDENT VARIABLE CP

2Y/BW	.2350	.2990	.3640	.4270	.5340	.6730	.7800	.8870	.9720	1.0000
X/CW										
.600								-.2289		
.633	-.1362									
.637			-.0733							
.650							-.1934			
.670									-.1203	
.700		-.0369				-.1510				
.723										-.2449
.725					-.1504					
.727	-.0494									
.750							-.1618	-.1089		
.760				-.1685						
.775					-.2482	-.1693				
.793	.0775									
.798			-.1389							
.808				-.1442						
.834		-.1479								
.839			-.1224							
.850					-.0268	-.0311	.0040			
.857				-.0545						
.862									.0033	
.865		-.2355								
.873			-.0532							
.900		-.0923			-.0093			.0527		
.905				-.0181						
.919			-.0346							
.950					.0506	.0573	.0807			
.953				.0253						
.955			-.0010							
.965		-.0263								

ALPHA (1) = -3.998 BETA (4) = 4.282 MACH = .59638 Q = 594.21 P = 2386.5 RN/L = 4.8411

SECTION (1)LEFT WING TOP SURF DEPENDENT VARIABLE CP

2Y/BW	.2350	.2990	.3640	.4270	.5340	.6730	.7800	.8870	.9720	1.0000
X/CW										
.000	-.1600	-.0269	-.0423	.0560	.1001	-.0427	-.1307	-.0638	-.6225	
.010		-.0047	.0234		.4111	.3858	.3605	.3106		
.020		-.0073		.0700	.3639	.3354	.3144	.2745	-.2604	
.040			.0824	.2204						
.041	-.0815									
.050					.1838	.1599	.1398	.1171		
.069									-.2563	
.080					.0311					

AMES 11-073(OA148) -140A/B/C/R ORB LEFT WING TOP (XEBU61)

ALPHA (1) = -3.988 BETA (4) = 4.282

SECTION (1)LEFT WING TOP SURF DEPENDENT VARIABLE CP

2Y/BW	.2350	.2990	.3640	.4270	.5340	.6730	.7800	.8870	.9720	1.0000
X/CW										
.081				.1284						
.086			.1653							
.094		-.0127								
.113	-.0419									
.150					-.1424	-.1665	-.1616	-.1955		
.157									-.2478	
.163			.0000							
.177				-.0644						
.229		.0844								
.246			-.0160							
.247	.0151									
.250					-.2778	-.3183	-.3458	-.3783		
.274				-.1854						
.345									-.1831	
.362		.0548								
.390			-.1596							
.400					-.2551	-.3067		-.3438		
.402				-.2250						
.418										-.3031
.429	.0625									
.457		-.1377								
.503									-.2028	
.547	-.0523									
.550					-.2108	-.2468				
.565				-.1444						
.600								-.2279		
.633	-.1552									
.637			-.1091							
.650							-.1985			
.670									-.1066	
.700		-.0695				-.1651				
.723										-.1912
.725					-.1647					
.727	-.0879									
.750							-.1693	-.1091		
.760				-.1734						
.775					-.2685	-.1746				
.793	.0460									
.798			-.1580							
.808				-.1680						
.834		-.1683								
.839			-.1547							
.850					-.0447	-.0451	-.0060			
.857				-.0745						
.862									.0160	

AMES 11-073(OA148) -140A/B/C/R ORB LEFT WING TOP (XE8U61)

ALPHA (1) = -3.998 BETA (4) = 4.282

SECTION (1)LEFT WING TOP SURF DEPENDENT VARIABLE CP

2Y/BW	.2350	.2990	.3640	.4270	.5340	.6730	.7600	.8870	.9720	1.0000
X/CW										
.865		-.2637								
.879			-.0777							
.900		-.1003			-.0154			.0521		
.905				-.0312						
.919			-.0484							
.950					.0459	.0535	.0829			
.953				.0172						
.955			-.0111							
.965		-.0389								

ALPHA (1) = -4.005 BETA (5) = 8.352 MACH = .59638 Q = 594.21 P = 2386.5 RN/L = 4.8411

SECTION (1)LEFT WING TOP SURF DEPENDENT VARIABLE CP

2Y/BW	.2350	.2990	.3640	.4270	.5340	.6730	.7800	.8870	.9720	1.0000
X/CW										
.000	-.1724	-.0215	.0131	.1199	.1327	-.0250	-.1368	-.0750	-.5259	
.010		-.0132	.0474		.3417	.3195	.2861	.2428		
.020		-.0201		.0000	.2989	.2707	.2441	.2056	-.2901	
.040			.0858	.1658						
.041	-.1127									
.050					.1367	.1124	.0903	.0718		
.069									-.2849	
.080					-.0031					
.081				.0888						
.085			.1457							
.094		-.0241								
.113	-.0594									
.150					-.1526	-.1863	-.1785	-.2175		
.157									-.2603	
.163			.0000							
.177				-.0834						
.229		.0707								
.246			-.0367							
.247	.0045									
.250					-.2324	-.3204	-.3446	-.3751		
.274				-.1976						
.345									-.1776	
.352		.0407								
.390			-.1796							
.400					-.2706	-.3129		-.3358		
.402				-.2487						
.418										-.2365
.429	.0535									

AMES 11-073(OA148) -140A/B/C/R ORB LEFT WING TOP (XEBU61)

ALPHA (1) = -4.005 BETA (5) = 8.352

SECTION (1)LEFT WING TOP SURF DEPENDENT VARIABLE CP

2Y/BW	.2350	.2990	.3640	.4270	.5340	.6730	.7800	.8870	.9720	1.0000
X/CW										
.497		-.1566								
.503									-.1901	
.547	-.0693									
.550					-.2330	-.2572				
.565				-.1707						
.600								-.2183		
.633	-.1786									
.637			-.1416							
.650							-.1975			
.670									-.0838	
.700		-.1090				-.1683				
.723										-.1398
.725					-.1795					
.727	-.1226									
.750							-.1764	-.1030		
.760				-.1875						
.775					-.2921	-.1879				
.793	.0109									
.798			-.1711							
.808				-.1905						
.834		-.1817								
.839			-.1777							
.850					-.0572	-.0438	.0000			
.857				-.0874						
.862									.0336	
.865		-.2815								
.879			-.0940							
.900		-.1083			-.0212			.0624		
.905				-.0409						
.919			-.0560							
.950					.0445	.0550	.0863			
.953				.0129						
.955			-.0126							
.965		-.0409								

AMES 11-073(OA148) -140A/B/C/R ORB LEFT WING TOP (XE8U61)

ALPHA (2) = .015 BETA (1) = -7.895 MACH = .59624 Q = 593.85 P = 2386.1 RN/L = 4.8452

SECTION (1)LEFT WING TOP SURF DEPENDENT VARIABLE CP

2Y/BW	.2350	.2990	.3640	.4270	.5340	.6730	.7800	.8870	.9720	1.0000
X/CW										
.000	-.0653	.0477	.0637	.2957	.4902	.4741	.4562	.5068	-.1233	
.010		.0754	.1338		.4499	.4876	.4340	.2688		
.020		.0638		.0000	.3163	.3013	.2614	.1895	-.1034	
.040			.1760	.1709						
.041	-.0070									
.050					.0306	-.0105	-.0514	-.0835		
.069									-.2194	
.080					-.1767					
.081				-.0057						
.086			.2068							
.094		.0228								
.113	.0064									
.150					-.3547	-.4056	-.4314	-.4103		
.157									-.3306	
.163			.0000							
.177				-.2425						
.229		.0917								
.246			-.1367							
.247	.0355									
.250					-.4292	-.5060	-.5678	-.6114		
.274				-.3118						
.345									-.3472	
.362		-.0136								
.390			-.2461							
.400					-.2847	-.3657		-.4489		
.402				-.2503						
.418										-.0577
.429	.0501									
.497		-.1961								
.503									-.3842	
.547	-.1115									
.550					-.1617	-.2301				
.565				-.0784						
.600								-.2670		
.633	-.1632									
.637			-.0224							
.650							-.1907			
.670									-.2440	
.700		.0051				-.1271				
.723										-.2406
.725					-.1085					
.727	-.0216									
.750							-.1515	-.1297		
.760				-.1267						
.775					-.1726	-.1240				

AMES 11-073(OA148) -140A/B/C/R ORB LEFT WING TOP (XEBU61)

ALPHA (2) = .015 BETA (1) = -7.895

SECTION (1)LEFT WING TOP SURF DEPENDENT VARIABLE CP

2Y/BW	.2350	.2990	.3640	.4270	.5340	.6730	.7800	.8870	.9720	1.0000
X/CW										
.793	.1353									
.798			-.1048							
.808				-.0664						
.834		-.0998								
.839			-.0389							
.850					.0160	.0085	.0194			
.857				.0091						
.862									-.0614	
.865		-.1464								
.879			.0045							
.900		-.0318			.0317			.0509		
.905				.0257						
.919			.0130							
.950					.0774	.0891	.0961			
.953				.0603						
.955			.0335							
.965		.0316								

ALPHA (2) = .022 BETA (2) = -3.851 MACH = .59624 Q = 593.85 P = 2386.1 RN/L = 4.8452

SECTION (1)LEFT WING TOP SURF DEPENDENT VARIABLE CP

2Y/BW	.2350	.2990	.3640	.4270	.5340	.6730	.7800	.8870	.9720	1.0000
X/CW										
.000	-.0957	.0310	.0653	.2893	.4612	.4260	.4061	.4383	-.1408	
.010		.0343	.1134		.3730	.4090	.3497	.1998		
.020		.0201		.0000	.2537	.2328	.1915	.1162	-.1647	
.040			.1442	.1237						
.041	-.0520									
.050					-.0116	-.0622	-.0878	-.1338		
.069									-.2620	
.080					-.2132					
.081				-.0354						
.086			.1617							
.094		-.0156								
.113	-.0286									
.150					-.3579	-.4146	-.4321	-.4162		
.157									-.3398	
.163			.0000							
.177				-.2514						
.229		.0637								
.246			-.1530							
.247	.0087									
.250					-.4413	-.5101	-.5636	-.6020		

AMES 11-073(OA148) -140A/B/C/R ORB LEFT WING TOP (XEBU61)

ALPHA (2) = .022 BETA (2) = -3.851

SECTION (1)LEFT WING TOP SURF DEPENDENT VARIABLE CP

2Y/BW	.2350	.2990	.3640	.4270	.5340	.6730	.7800	.8870	.9720	1.0000
X/CW										
.274				-.3278						
.345									-.3330	
.362		-.0310								
.390			-.2729							
.400					-.3075	-.3847		-.4478		
.402				-.2812						
.418										-.0926
.429	.0278									
.497		-.2213								
.503									-.3533	
.547	-.1349									
.550					-.1941	-.2508				
.565				-.1170						
.600								-.2618		
.633	-.2041									
.637			-.0669							
.650							-.1963			
.670									-.2210	
.700		-.0357				-.1380				
.722										-.2792
.725					-.1302					
.727	-.0604									
.750							-.1610	-.1239		
.760				-.1509						
.775					-.2089	-.1458				
.793	.0864									
.798			-.1153							
.809				-.1085						
.834		-.1238								
.839			-.0835							
.850					-.0071	-.0116	.0115			
.857				-.0238						
.862									-.0507	
.865		-.1834								
.879			-.0315							
.900		-.0570			.0140			.0534		
.905				.0059						
.919			-.0120							
.950					.0683	.0746	.0966			
.953				.0448						
.955			.0218							
.965		.0101								

AMES 11-073(OA148) -140A/B/C/R ORB LEFT WING TOP (XE8U61)

ALPHA (2) = .105 BETA (3) = .189 MACH = .59624 Q = 593.85 P = 2386.1 RN/L = 4.8452

SECTION (1)LEFT WING TOP SURF DEPENDENT VARIABLE CP

2Y/BW	.2350	.2990	.3640	.4270	.5340	.6730	.7800	.8870	.9720	1.0000
X/CW										
.000	-.1294	-.0003	.0551	.2780	.4344	.3826	.3544	.3746	-.1659	
.010		-.0159	.0854		.2912	.3207	.2704	.1179		
.020		-.0287		.0000	.1764	.1544	.1190	.0508	-.2175	
.040			.1051	.0623						
.041	-.1010									
.050					-.0634	-.1079	-.1495	-.1716		
.069									-.2979	
.080					-.2410					
.081				-.0777						
.086			.1200							
.094		-.0446								
.113	-.0642									
.150					-.3718	-.4216	-.4342	-.4380		
.157									-.3528	
.163			.0000							
.177				-.2696						
.229		.0381								
.246			-.1691							
.247	-.0169									
.250					-.4454	-.5152	-.5591	-.5502		
.274				-.3415						
.345									-.3126	
.362		-.0529								
.390			-.2801							
.400					-.3334	-.3986		-.4450		
.402				-.3040						
.418										-.1295
.429	.0065									
.497		-.2440								
.503									-.3289	
.547	-.1580									
.550					-.2296	-.2794				
.565				-.1576						
.600								-.2596		
.633	-.2264									
.637			-.1076							
.650							-.2092			
.670									-.1915	
.700		-.0755				-.1573				
.723										-.2989
.725					-.1511					
.727	-.0915									
.750							-.1723	-.1243		
.760				-.1559						
.775					-.2437	-.1637				

AMES 11-073(OA148) -140A/B/C/R ORB LEFT WING TOP (XEBU61)

ALPHA (2) = .105 BETA (3) = .189

SECTION (1)LEFT WING TOP SURF DEPENDENT VARIABLE CP

2Y/BW	.2350	.2990	.3640	.4270	.5340	.6730	.7800	.8870	.9720	1.0000
X/CW										
.793	.0464									
.798			-.1360							
.808				-.1444						
.834		-.1443								
.839			-.1294							
.850					-.0344	-.0331	-.0035			
.857				-.0487						
.862									-.0299	
.865		-.2151								
.879			-.0526							
.900		-.0867			.0006			.0532		
.905				-.0099						
.919			-.0306							
.950					.0533	.0642	.0873			
.953				.0321						
.955			.0046							
.965		-.0197								

ALPHA (2) = .100 BETA (4) = 4.264 MACH = .59624 Q = 593.85 P = 2386.1 RN/L = 4.8452

SECTION (1)LEFT WING TOP SURF DEPENDENT VARIABLE CP

2Y/BW	.2350	.2990	.3640	.4270	.5340	.6730	.7800	.8870	.9720	1.0000
X/CW										
.000	-.1680	-.0548	.0266	.2465	.3950	.3429	.3221	.3263	-.1690	
.010		-.0622	.0489		.2116	.2375	.1774	.0196		
.020		-.0657		.0000	.1024	.0757	.0279	-.0407	-.2764	
.040			.0766	.0147						
.041	-.1370									
.050					-.1129	-.1563	-.2079	-.2453		
.069									-.3360	
.080					-.2663					
.081				-.1062						
.086			.0880							
.094		-.0601								
.113	-.0830									
.150					-.3875	-.4350	-.4326	-.4578		
.157									-.3642	
.163			.0000							
.177				-.2733						
.229		.0269								
.246			-.1843							
.247	-.0311									
.250					-.4585	-.5173	-.5607	-.5865		

AMES 11-073(OA148) -140A/B/C/R ORB LEFT WING TOP (XEBUG1)

ALPHA (2) = .100 BETA (4) = 4.264

SECTION (11LEFT WING TOP SURF DEPENDENT VARIABLE CP

2Y/BW	.2350	.2990	.3640	.4270	.5340	.6730	.7800	.8870	.9720	1.0000
X/CW										
.274				-.3438						
.345									-.2983	
.362		-.0608								
.390			-.2895							
.400					-.3511	-.4102		-.4380		
.402				-.3261						
.418										-.1907
.429	-.0042									
.497		-.2560								
.503									-.3059	
.547	-.1649									
.550					-.2564	-.2948				
.565				-.1906						
.600								-.2550		
.633	-.2519									
.637			-.1520							
.650							-.2168			
.670									-.1678	
.700		-.1148				-.1704				
.723										-.3672
.725					-.1656					
.727	-.1320									
.750							-.1801	-.1213		
.750				-.1729						
.775					-.2655	-.1761				
.793	.0077									
.799			-.1579							
.808				-.1790						
.834		-.1667								
.839			-.1579							
.850					-.0475	-.0459	-.0063			
.857				-.0758						
.862									-.0292	
.865		-.2463								
.879			-.0861							
.900		-.1053			-.0127			.0546		
.905				-.0304						
.919			-.0449							
.950					.0462	.0545	.0861			
.953				.0178						
.955			-.0116							
.965		-.0380								

AMES 11-073(OA148) -140A/B/C/R ORB LEFT WING TOP (XEBU61)

ALPHA (2) = .094 BETA (5) = 8.317 MACH = .59624 Q = 593.85 P = 2386.1 RN/L = 4.8452

SECTION (1)LEFT WING TOP SURF DEPENDENT VARIABLE CP

2Y/BW	.2350	.2930	.3640	.4270	.5340	.6730	.7800	.8870	.9720	1.0000
X/CW										
.000	-.2163	-.1347	-.0376	.1959	.3489	.2962	.2684	.2596	-.2076	
.010		-.1233	.0004		.1085	.1417	.0828	-.0658		
.020		-.1119		.0000	.0140	-.0029	-.0418	-.1237	-.3139	
.040			.0372	-.0392						
.041	-.1654									
.050					-.1615	-.2095	-.2420	-.2890		
.069									-.3653	
.080					-.3013					
.081				-.1407						
.086			.0522							
.094		-.0721								
.113	-.1029									
.150					-.3899	-.4442	-.4495	-.4623		
.157									-.3630	
.163			.0000							
.177				-.2838						
.229		.0140								
.246			-.1941							
.247	-.0393									
.250					-.4616	-.5192	-.5551	-.5818		
.274				-.3478						
.345									-.2740	
.362		-.0716								
.390			-.2946							
.400					-.3609	-.4188		-.4297		
.402				-.3440						
.418										-.2717
.429	-.0123									
.497		-.2566								
.503									-.2755	
.547	-.1786									
.550					-.2838	-.3099				
.565				-.2238						
.600								-.2444		
.633	-.2724									
.637			-.1842							
.650							-.2220			
.670									-.1519	
.700		-.1508				-.1857				
.722										-.3989
.725					-.1679					
.777	-.1677									
.750							-.1872	-.1171		
.760				-.1860						
.775					-.2874	-.1912				

AMES 11-073(OA146) -140A/B/C/R ORB LEFT WING TOP (XEBUS1)

ALPHA (2) = .094 BETA (5) = 8.317

SECTION (1)LEFT WING TOP SURF DEPENDENT VARIABLE CP

2Y/BW	.2350	.2990	.3540	.4270	.5340	.6730	.7800	.8870	.9720	1.0000
X/CW										
.793	-.0201									
.798			-.1740							
.808				-.2038						
.834		-.1805								
.839			-.1880							
.850					-.0670	-.0516	-.0126			
.857				-.0958						
.862									-.0120	
.865		-.2695								
.879			-.1010							
.900		-.1223			-.0272			.0560		
.905				-.0448						
.919			-.0512							
.950					.0379	.0447	.0791			
.953				.0095						
.965			-.0208							
.965		-.0528								

ALPHA (3) = 4.024 BETA (1) = -7.901 MACH = .59706 Q = 595.26 P = 2335.4 RN/L = 4.8521

SECTION (1)LEFT WING TOP SURF DEPENDENT VARIABLE CP

2Y/BW	.2350	.2990	.3640	.4270	.5340	.6730	.7800	.8870	.9720	1.0000
X/CW										
.000	-.0383	.0522	.1023	.3968	.6018	.5909	.5689	.4935	-.0861	
.010		-.0045	.0926		.0664	.0946	-.0394	-.3366		
.020		-.0192		.0000	-.0869	-.1610	-.2595	-.4093	-.4995	
.040			.0971	-.1305						
.041	-.0425									
.050					-.3817	-.4849	-.5586	-.6392		
.069									-.6093	
.080					-.5820					
.081				-.3067						
.095			.0656							
.094		-.0470								
.113	-.0314									
.150					-.6326	-.7474	-.8000	-.7552		
.157									-.7353	
.163			.0000							
.177				-.4240						
.229		.0163								
.245			-.3265							
.247	-.0052									
.250					-.6262	-.7396	-.8274	-.8895		

AMES 11-073(OA148) -140A/B/C/R ORB LEFT WING TOP (XEB061)

ALPHA (3) = 4.024 BETA (1) = -7.901

SECTION (1)LEFT WING TOP SURF DEPENDENT VARIABLE CP

2Y/BW	.2350	.2990	.3640	.4270	.5340	.6730	.7800	.8870	.9720	1.0000
X/CW										
.274				-.4777						
.345									-.6932	
.352		-.1427								
.390			-.3730							
.400					-.3665	-.4645		-.5623		
.402				-.3413						
.418										-.4841
.420	-.0175									
.497		-.3226								
.503									-.6648	
.547	-.2358									
.550					-.1874	-.2713				
.555				-.1037						
.600								-.3341		
.633	-.2552									
.637			-.0496							
.660							-.2057			
.670									-.5268	
.700		-.0305				-.1271				
.723										-1.1119
.725					-.0896					
.727	-.0567									
.750							-.1620	-.1666		
.760				-.1022						
.775					-.1472	-.1202				
.793	.1404									
.799			-.0983							
.809				-.0552						
.834		-.0879								
.839			-.0321							
.850					.0288	.0211	.0132			
.857				.0130						
.892									-.3239	
.865		-.1472								
.879			.0070							
.900		-.0135			.0530			.0306		
.905				.0347						
.919			.0218							
.950					.0916	.0958	.0970			
.953				.0756						
.955			.0439							
.965		.0515								

AMES 11-073(OA148) -140A/B/C/R ORB LEFT WING TOP (XE8U81)

ALPHA (3) = 4.026 BETA (2) = -3.849 MACH = .59706 Q = 595.26 P = 2385.4 RN/L = 4.8521

SECTION (1)LEFT WING TOP SURF DEPENDENT VARIABLE CP

2Y/BW	.2350	.2990	.3640	.4270	.5340	.6730	.7800	.8870	.9720	1.0000
X/CW										
.000	-.1015	-.0410	.0080	.3121	.5183	.4917	.4692	.3859	-.2223	
.010		-.0926	.0085		-.0454	-.0227	-.1568	-.4477		
.020		-.0964		.0000	-.1819	-.2530	-.3605	-.5150	-.5812	
.040			.0232	-.1984						
.041	-.1057									
.050					-.4415	-.5489	-.6313	-.7058		
.069									-.6612	
.080					-.6129					
.081				-.3545						
.086			.0052							
.094		-.0912								
.113	-.0767									
.150					-.6573	-.7671	-.8095	-.7769		
.157									-.7450	
.163			.0000							
.177				-.5082						
.229		-.0150								
.246			-.3521							
.247	-.0400									
.250					-.6326	-.7481	-.8319	-.8742		
.274				-.4983						
.345									-.6503	
.362		-.1692								
.390			-.4033							
.400					-.3973	-.4804		-.5555		
.402				-.3731						
.418										-.6684
.429	-.0480									
.497		-.3524								
.503									-.6331	
.547	-.2783									
.550					-.2268	-.2963				
.565				-.1525						
.600								-.3321		
.633	-.2991									
.637			-.1012							
.650							-.2237			
.670									-.5710	
.700		-.0876				-.1475				
.723										-1.2073
.725					-.1129					
.727	-.1078									
.750							-.1782	-.1650		
.760				-.1285						
.775					-.1828	-.1411				

AMES 11-073(OA148) -140A/B/C/R ORB LEFT WING TOP (XEBU61)

ALPHA (3) = 4.026 BETA (2) = -3.849

SECTION (1)LEFT WING TOP SURF DEPENDENT VARIABLE CP

2Y/BW	.2350	.2990	.3640	.4270	.5340	.6730	.7800	.8870	.9720	1.0000
X/CW										
.793	.0854									
.798			-.1130							
.808				-.0998						
.834		-.1205								
.839			-.0880							
.850					-.0053	-.0125	.0023			
.857				-.0239						
.862									-.3592	
.865		-.1938								
.879			-.0314							
.900		-.0486			.0255			.0250		
.905				.0122						
.919			-.0053							
.950					.0713	.0773	.0847			
.953				.0493						
.955			.0251							
.965		.0112								

ALPHA (3) = 4.034 BETA (3) = .195 MACH = .59706 Q = 595.26 P = 2385.4 RN/L = 4.8521

SECTION (1)LEFT WING TOP SURF DEPENDENT VARIABLE CP

2Y/BW	.2350	.2990	.3640	.4270	.5340	.6730	.7800	.8870	.9720	1.0000
X/CW										
.000	-.1699	-.1532	-.1052	.2104	.4337	.4055	.3709	.2792	-.3397	
.010		-.1792	-.0728		-.1350	-.1125	-.2432	-.5207		
.020		-.1690		.0000	-.2602	-.3233	-.4196	-.5742	-.6272	
.040			-.0333	-.2589						
.041	-.1559									
.050					-.4772	-.5774	-.6533	-.7084		
.069									-.6718	
.080					-.6178					
.081				-.3786						
.086			-.0321							
.094		-.1199								
.113	-.1102									
.150					-.6483	-.7550	-.8055	-.7494		
.157									-.7009	
.163			.0000							
.177				-.5046						
.209		-.0352								
.246			-.3578							
.247	-.0657									
.250					-.6345	-.7436	-.8093	-.8480		

AMES 11-073(OA148) -140A/B/C/R ORB LEFT WING TOP (XE8U61)

ALPHA (3) = 4.034 BETA (3) = .195

SECTION (1)LEFT WING TOP SURF DEPENDENT VARIABLE CP

2Y/BW	.2350	.2990	.3640	.4270	.5340	.6730	.7800	.8870	.9720	1.0000
X/CW										
.274				-.4994						
.345									-.5883	
.362		-.1773								
.390			-.4085							
.400					-.4186	-.4928		-.5438		
.402				-.3920						
.418										-.8128
.429	-.0684									
.497		-.3707								
.503									-.5746	
.547	-.2927									
.550					-.2563	-.3140				
.565				-.1909						
.600								-.3269		
.633	-.3203									
.637			-.1464							
.650							-.2322			
.670									-.6017	
.700		-.1274				-.1671				
.723										-1.2122
.725					-.1427					
.727	-.1411									
.750							-.1949	-.1633		
.760				-.1367						
.775					-.2086	-.1564				
.793	.0473									
.798			-.1344							
.808				-.1332						
.834		-.1404								
.839			-.1363							
.850					-.0270	-.0262	-.0050			
.857				-.0530						
.882									-.4509	
.865		-.2416								
.879			-.0629							
.900		-.0792			.0083			.0268		
.905				-.0085						
.919			-.0330							
.950					.0598	.0688	.0804			
.953				.0310						
.955			.0028							
.965		-.0141								

AMES 11-073(OA148) -140A/B/C/R ORB LEFT WING TOP (XEBUB1)

ALPHA (3) = 4.044 BETA (4) = 4.254 MACH = .59706 Q = 595.26 P = 2385.4 RN/L = 4.8521

SECTION (1)LEFT WING TOP SURF DEPENDENT VARIABLE CP

2Y/BW	.2350	.2990	.3640	.4270	.5340	.6730	.7800	.8870	.9720	1.0000
X/CW										
.000	-.2313	-.2667	-.2416	.0937	.3224	.2945	.2479	.1180	-.5750	
.010		-.2759	-.1588		-.2613	-.2377	-.3984	-.6740		
.020		-.2246		.0000	-.3525	-.4326	-.5484	-.7203	-.7667	
.040			-.0836	-.3017						
.041	-.1955									
.050					-.5274	-.6453	-.7432	-.8082		
.069									-.7319	
.080					-.6542					
.081				-.4069						
.086			-.0730							
.094		-.1372								
.113	-.1385									
.150					-.6604	-.7659	-.8039	-.7847		
.157									-.7213	
.163			.0000							
.177				-.4998						
.229		-.0512								
.245			-.3614							
.247	-.0791									
.250					-.6456	-.7410	-.8065	-.8484		
.274				-.4982						
.345									-.5739	
.362		-.1842								
.390			-.3989							
.400					-.4335	-.5069		-.5504		
.402				-.4074						
.418										-1.1168
.429	-.0800									
.497		-.3811								
.503									-.5620	
.547	-.2997									
.550					-.2858	-.3327				
.565				-.2262						
.600								-.3196		
.633	-.3492									
.637			-.1970							
.650							-.2372			
.670									-.5845	
.700		-.1590				-.1836				
.723										-1.3039
.725					-.1674					
.727	-.1709									
.750							-.1942	-.1582		
.760				-.1712						
.775					-.2286	-.1755				

AMES 11-073(OA148) -140A/B/C/R ORB LEFT WING TOP (XE8U61)

ALPHA (3) = 4.044 BETA (4) = 4.254

SECTION (1)LEFT WING TOP SURF DEPENDENT VARIABLE CP

2Y/BW	.2350	.2990	.3640	.4270	.5340	.6730	.7800	.8870	.9720	1.0000
X/CW										
.793	.0119									
.796			-.1541							
.808				-.1785						
.834		-.1651								
.839			-.1694							
.850					-.0530	-.0423	-.0128			
.857				-.0885						
.862									-.4158	
.865		-.2769								
.879			-.0813							
.900		-.1011			-.0101			.0262		
.905				-.0530						
.919			-.0493							
.950					.0393	.0564	.0738			
.953				.0021						
.955			-.0120							
.965		-.0451								

ALPHA (3) = 4.047 BETA (5) = 8.299 MACH = .59706 Q = 595.26 P = 2385.4 RN/L = 4.8521

SECTION (1)LEFT WING TOP SURF DEPENDENT VARIABLE CP

2Y/BW	.2350	.2990	.3640	.4270	.5340	.6730	.7800	.8870	.9720	1.0000
X/CW										
.000	-.3104	-.4181	-.2545	-.0701	.2016	.1704	.1208	-.0137	-.7858	
.010		-.3296	-.1392		-.3760	-.3613	-.5105	-.7660		
.020		-.2524		.0000	-.4396	-.5096	-.6174	-.8107	-.8092	
.040			-.1174	-.3390						
.041	-.2337									
.050					-.5700	-.6713	-.7633	-.8325		
.069									-.7383	
.080					-.6579					
.081				-.3981						
.086			-.1332							
.094		-.2351								
.113	-.1768									
.150					-.6463	-.7462	-.7779	-.7660		
.157									-.6651	
.163			.0000							
.177				-.4639						
.229		-.0387								
.246			-.4280							
.247	-.0850									
.250					-.6242	-.7236	-.7774	-.8135		

AMES 11-073(OA148) -140A/B/C/R ORB LEFT WING TOP (XEBUGI)

ALPHA (3) = 4.047 BETA (5) = 8.299

SECTION (1)LEFT WING TOP SURF DEPENDENT VARIABLE CP

2Y/BW	.2350	.2990	.3640	.4270	.5340	.6730	.7800	.8870	.9720	1.0000
X/CW										
.274				-.4763						
.345									-.5243	
.362		-.1710								
.390			-.4088							
.400					-.4387	-.5016		-.5309		
.402				-.4165						
.418										-1.3460
.429	-.0796									
.497		-.3790								
.503									-.5253	
.547	-.2983									
.550					-.3072	-.3445				
.565				-.2904						
.600								-.3087		
.633	-.3602									
.637			-.2036							
.650							-.2391			
.670									-.5404	
.700		-.1904				-.1949				
.723										-1.2026
.725					-.1929					
.727	.1958									
.750							-.1973	-.1548		
.760				-.2091						
.775					-.2708	-.1765				
.793	-.0340									
.798			-.1705							
.808				-.2176						
.834		-.1907								
.839			-.1896							
.850					-.0767	-.0461	-.0244			
.857				-.1061						
.862									-.2551	
.865		-.3014								
.879			-.1071							
.900		-.1244			-.0353			.0184		
.905				-.0562						
.919			-.0644							
.950					.0258	.0373	.0608			
.953				.0030						
.955			-.0283							
.965		-.0582								

ORIGINAL PAGE IS OF POOR QUALITY

AMES 11-073(OA148) -140A/B/C/R ORB LEFT WING TOP (XEBU61)

ALPHA (4) = 8.028 BETA (1) = -7.897 MACH = .59720 Q = 595.49 P = 2385.3 RN/L = 4.8534

SECTION (1)LEFT WING TOP SURF DEPENDENT VARIABLE CP

2Y/BW	.2350	.2990	.3640	.4270	.5340	.6730	.7800	.8870	.9720	1.0000
X/CW										
.000	-.0731	-.1419	-.1991	.1564	.3774	.3175	.2133	-.0032	-.8197	
.010		-.2431	-.1883		-.6003	-.6351	-.9046	-1.3874		
.020		-.2194		.0000	-.7080	-.8752	-1.0848	-1.4454	-1.4300	
.040			-.1459	-.5630						
.041	-.0910									
.050					-.9405	-1.1614	-1.3314	-1.4511		
.069									-1.3343	
.080					-1.0952					
.081				-.7099						
.086			-.1750							
.094		-.1504								
.113	-.0776									
.150					-.9998	-1.1755	-1.2577	-1.1889		
.157									-1.4233	
.163			.0000							
.177				-.7607						
.229		-.0729								
.246			-.5437							
.247	-.0554									
.250					-.8215	-.9657	-1.0782	-1.2112		
.274				-.6403						
.345									-1.1564	
.362		-.2764								
.390			-.4838							
.400					-.4342	-.5519		-.7444		
.402				-.3973						
.418										-1.7267
.429	-.1068									
.497		-.4630								
.503									-1.0881	
.547	-.3749									
.550					-.1943	-.3014				
.565				-.1438						
.600								-.4373		
.633	-.3603									
.637			-.1131							
.650							-.2402			
.670									-.9254	
.700		-.0800				-.1294				
.723										-2.0152
.725					-.0798					
.727	-.0720									
.750							-.1895	-.2621		
.760				-.0977						
.775					-.0965	-.1005				

AMES 11-073(OA148) -140A/B/C/R ORB LEFT WING TOP (XE8U61)

ALPHA (4) = 8.028 BETA (1) = -7.897

SECTION (1)LEFT WING TOP SURF DEPENDENT VARIABLE CP

2Y/BW	.2350	.2990	.3640	.4270	.5340	.6730	.7800	.8870	.9720	1.0000
X/CW										
.793	.1728									
.798			-.0834							
.808				-.0905						
.834		-.0914								
.839			-.0399							
.850					.0194	.0158	-.0231			
.857				-.0158						
.862									-.7125	
.865		-.1854								
.879			.0160							
.900		.0218			.0553			-.0611		
.905				.0160						
.919			.0190							
.950					.0863	.0968	.0557			
.953				.0574						
.955			.0464							
.965		.0555								

ALPHA (4) = 8.037 BETA (2) = -3.847 MACH = .59720 Q = 595.49 P = 2385.3 RN/L = 4.8534

SECTION (1)LEFT WING TOP SURF DEPENDENT VARIABLE CP

2Y/BW	.2350	.2990	.3540	.4270	.5340	.6730	.7800	.8870	.9720	1.0000
X/CW										
.000	-.1577	-.3012	-.3826	-.0030	.2350	.1599	.0472	-.1901	-1.1241	
.010		-.3656	-.3256		-.7249	-.7664	-1.0728	-1.5440		
.020		-.3090		.0000	-.8185	-.9957	-1.2049	-1.5945	-1.5832	
.040			-.2363	-.6298						
.041	-.1568									
.060					-.9999	-1.2210	-1.3730	-1.5269		
.069									-1.3887	
.080					-1.1259					
.081				-.7348						
.086			-.2301							
.094		-.1957								
.113	-.1264									
.150					-.9924	-1.1712	-1.2561	-1.1526		
.157									-1.3553	
.163			.0000							
.177				-.7593						
.229		-.0995								
.246			-.5508							
.247	-.0920									
.250					-.8279	-.9738	-1.0614	-1.2038		

AMES 11-073(OA148) -140A/B/C/R ORB LEFT WING TOP (XEBU61)

ALPHA (4) = 8.037 BETA (2) = -3.847

SECTION (1)LEFT WING TOP SURF DEPENDENT VARIABLE CP

2Y/BW	.2350	.2990	.3640	.4270	.5340	.6730	.7800	.8870	.9720	1.0000
X/CW										
.274				-.6427						
.345									-1.1017	
.362		-.3013								
.390			-.4995							
.400					-.4587	-.5709		-.7283		
.402				-.4271						
.418										-2.0804
.429	-.1311									
.497		-.5012								
.503									-1.0408	
.547	-.4032									
.550					-.2278	-.3247				
.555				-.1984						
.600								-.4293		
.633	-.3867									
.637			-.1533							
.650							-.2493			
.670									-1.0932	
.700		-.1531				-.1497				
.723										-2.0339
.725					-.1095					
.727	-.1293									
.750							-.2037	-.2418		
.760				-.1283						
.775					-.1148	-.1160				
.793	.1072									
.798			-.1145							
.808				-.1210						
.834		-.0999								
.839			-.1281							
.850					-.0149	-.0052	-.0343			
.857				-.0396						
.862									-.8258	
.865		-.2126								
.879			-.0370							
.900		-.0166			.0199			-.0575		
.905				-.0061						
.919			-.0224							
.950					.0603	.0726	.0531			
.953				.0337						
.955			.0237							
.955		.0174								

AMES 11-073(OA148) -140A/B/C/R ORB LEFT WING TOP (XEBU61)

ALPHA (4) = 8.042 BETA (3) = .196 MACH = .59720 Q = 595.49 P = 2385.3 RN/L = 4.8534

SECTION (1)LEFT WING TOP SURF DEPENDENT VARIABLE CP

2Y/BW	.2350	.2990	.3640	.4270	.5340	.6730	.7800	.8870	.9720	1.0000
X/CW										
.000	-.2547	-.4929	-.5684	-.1940	.0770	.0107	-.1107	-.3702	-1.4194	
.010		-.4972	-.3948		-.8543	-.9173	-1.2342	-1.6666		
.020		-.3930		.0000	-.9068	-1.0911	-1.3325	-1.7411	-1.7210	
.040			-.2332	-.6762						
.041	-.2143									
.050					-1.0300	-1.2500	-1.4162	-1.5780		
.069									-1.3882	
.080					-1.1079					
.081				-.7400						
.086			-.2213							
.094		-.2135								
.115	-.1879									
.150					-.9651	-1.1485	-1.2415	-1.1297		
.157									-1.2532	
.163			.0000							
.177				-.7301						
.229		-.1783								
.246			-.5404							
.247	-.1006									
.250					-.8166	-.9674	-1.0580	-1.1631		
.274				-.6285						
.345									-1.0341	
.362		-.3376								
.390			-.5253							
.400					-.4663	-.5814		-.7116		
.402				-.4597						
.418										-2.3912
.429	-.1346									
.497		-.5185								
.503									-.9772	
.547	-.4210									
.550					-.2746	-.3387				
.565				-.2538						
.600								-.4239		
.633	-.4158									
.637			-.2410							
.650							-.2559			
.670									-1.1879	
.700		-.1272				-.1616				
.723										-1.9725
.725					-.1494					
.727	-.1647									
.750							-.2122	-.2362		
.760				-.1478						
.775					-.2020	-.1267				

AMES 11-073(OA148) -140A/B/C/R ORB LEFT WING TOP (XE6061)

ALPHA (4) = 8.042 BETA (3) = .196

SECTION (1)LEFT WING TOP SURF DEPENDENT VARIABLE CP

2Y/BW	.2350	.2990	.3640	.4270	.5340	.6730	.7800	.8870	.9720	1.0000
X/CW										
.793	.0418									
.798			-.1385							
.808				-.1620						
.834		-.1303								
.839			-.1426							
.850					-.0725	-.0292	-.0456			
.857				-.0796						
.862									-1.0110	
.865		-.2232								
.879			-.0526							
.900		-.0575			-.0437			-.0505		
.905				-.0436						
.919			-.0259							
.950					.0094	.0476	.0500			
.953				-.0004						
.955			.0158							
.955		-.0180								

ALPHA (4) = 7.960 BETA (4) = 4.251 MACH = .59720 Q = 595.49 P = 2385.3 RN/L = 4.8534

SECTION (1)LEFT WING TOP SURF DEPENDENT VARIABLE CP

2Y/BW	.2350	.2990	.3640	.4270	.5340	.6730	.7800	.8870	.9720	1.0000
X/CW										
.000	-.3516	-.6268	-.5383	-.3712	-.0750	-.1484	-.2965	-.5791	-1.8298	
.010		-.4995	-.2810		-.9632	-1.0432	-1.3844	-1.3352		
.020		-.3593		.0000	-.9797	-1.1711	-1.4186	-1.9087	-1.8563	
.040			-.2467	-.6356						
.041	-.2775									
.050					-1.0335	-1.2531	-1.4588	-1.5555		
.059									-1.3951	
.080					-1.0998					
.081				-.6671						
.086			-.2762							
.094		-.3681								
.113	-.2273									
.150					-.9266	-1.0947	-1.1611	-1.1344		
.157									-1.2084	
.163			.0000							
.177				-.6624						
.229		-.2257								
.245			-.6276							
.247	-.1167									
.250					-.7821	-.9381	-1.0214	-1.1163		

AMES 11-073(OA148) -140A/B/C/R OR3 LEFT WING TOP (XEBU61)

ALPHA (4) = 7.960 BETA (4) = 4.251

SECTION (1)LEFT WING TOP SURF DEPENDENT VARIABLE CP

2Y/BW	.2350	.2990	.3640	.4270	.5340	.6730	.7800	.8870	.9720	1.0000
X/CW										
.274				-.6464						
.345									-.9989	
.362		-.2611								
.390			-.6526							
.400					-.4766	-.5794		-.6835		
.402				-.4663						
.418										-2.5529
.429	-.1459									
.497		-.5012								
.503									-.8953	
.547	-.4314									
.550					-.3342	-.3447				
.555				-.2719						
.600								-.4071		
.633	-.4316									
.637			-.2175							
.650							-.2573			
.670									-1.1874	
.700		-.1751				-.1789				
.723										-1.8415
.725					-.2115					
.727	-.2031									
.750							-.1993	-.2333		
.760				-.2323						
.775					-.3349	-.1604				
.793	-.0098									
.798			-.1578							
.808				-.2615						
.834		-.1703								
.839			-.1800							
.850					-.0371	-.0700	-.0503			
.857				-.1323						
.862									-1.0617	
.865		-.2742								
.879			-.0922							
.900		-.0961			-.0180			-.0494		
.905				-.0822						
.919			-.0552							
.950					.0419	.0295	.0242			
.953				-.0198						
.955			-.0163							
.965		-.0473								

DATE 11 FEB 75 TABULATED PRESSURE DATA - OA148 (AMES 11-073-1)

AMES 11-073(OA148) -140A/B/C/R ORB LEFT WING TOP (XEBU31)

ALPHA (4) = 7.955 BETA (5) = 8.305 MACH = .59720 Q = 595.49 P = 2385.3 RNIL = 4.8534

SECTION (1)LEFT WING TOP SURF DEPENDENT VARIABLE CP

2Y/BW	.2350	.2900	.3640	.4270	.5340	.6730	.7800	.8870	.9720	1.0000
X/CW										
.000	-.4662	-.7149	-.3673	-.5240	-.2893	-.3544	-.4983	-.7882	-2.2012	
.010		-.4093	-.3202		-1.0658	-1.1843	-1.5170	-1.9274		
.020		-.3934		.0000	-1.0337	-1.2655	-1.5132	-1.9588	-1.6431	
.040			-.3169	-.5160						
.041	-.3792									
.060					-1.0254	-1.2391	-1.4516	-1.6638		
.069									-1.3343	
.080					-1.0212					
.081				-.5844						
.085			-.3595							
.094		-.4220								
.113	-.2135									
.150					-.8552	-1.0474	-1.1098	-1.0885		
.157									-1.1395	
.163			.0000							
.177				-.6169						
.229		-.3093								
.246			-.7893							
.247	-.1395									
.250					-.7015	-.8850	-.9718	-1.0371		
.274				-.6195						
.345									-.8585	
.352		-.2257								
.390			-.5505							
.400					-.5216	-.5514		-.6402		
.402				-.6117						
.418										-2.0111
.449	-.1492									
.497		-.4971								
.503									-.7924	
.547	-.4170									
.550					-.3429	-.3446				
.565				-.4121						
.600								-.3769		
.633	-.4273									
.637			-.2355							
.650							-.2308			
.670									-.9480	
.700		-.2056				-.2067				
.723										-1.4607
.725					-.2086					
.727	-.2220									
.750							-.1565	-.2048		
.760				-.2196						
.775					-.2921	-.2389				

AMES 11-073(OA148) -140A/B/C/R ORB LEFT WING TOP (XEBUS1)

ALPHA (4) = 7.955 BETA (5) = 8.305

SECTION (1)LEFT WING TOP SURF DEPENDENT VARIABLE CP

2Y/BW	.2350	.2990	.3540	.4270	.5340	.6730	.7800	.8870	.9720	1.0000
X/CW										
.793	-.0615									
.798			-.1757							
.808				-.2457						
.834		-.1855								
.839			-.1934							
.850					-.1576	-.0948	-.0642			
.857				-.1204						
.862									-.3031	
.865		-.2685								
.879			-.1111							
.900		-.1121			-.0927			-.0516		
.905				-.0654						
.913			-.0587							
.950					-.0210	.0158	-.0015			
.953				-.0020						
.955			-.0259							
.965		-.0591								

ALPHA (5) = 11.943 BETA (1) = -7.853 MACH = .59660 Q = 594.44 P = 2386.0 RN/L = 4.8439

SECTION (1)LEFT WING TOP SURF DEPENDENT VARIABLE CP

2Y/BW	.2350	.2990	.3640	.4270	.5340	.6730	.7800	.8870	.9720	1.0000
X/CW										
.000	-.1499	-.5111	-.7965	-.3700	-.1341	-.2610	-.4182	-.7208	-2.0404	
.010		-.6152	-.6612		-1.5366	-1.6283	-2.0501	-2.5183		
.020		-.4818		.0000	-1.5343	-1.8172	-2.1972	-2.6274	-2.7393	
.040			-.4932	-1.0829						
.041	-.1494									
.060					-1.6441	-1.9582	-2.3357	-2.6070		
.069									-2.7626	
.080					-1.7504					
.091				-1.1267						
.096			-.4419							
.094		-.2235								
.113	-.1666									
.150					-1.2787	-1.4954	-1.7315	-1.5581		
.157									-2.0982	
.163			.0000							
.177				-.9755						
.223		-.1982								
.245			-.6810							
.247	-.0864									
.250					-.9561	-1.1559	-1.2576	-1.4456		

AMES 11-073(OA148) -140A/B/C/R ORB LEFT WING TOP (XEBU61)

ALPHA (5) = 11.943 BETA (1) = -7.853

SECTION (1)LEFT WING TOP SURF DEPENDENT VARIABLE CP

2Y/BW	.2350	.2990	.3640	.4270	.5340	.6730	.7800	.8870	.9720	1.0000
X/CW										
.274				-.7208						
.345									-2.0982	
.362		-.4740								
.390			-.6138							
.400					-.4280	-.5921		-.8632		
.402				-.4964						
.418										-2.3944
.429	-.1914									
.497		-.7409								
.503									-2.1046	
.547	-.5064									
.550					-.2204	-.2682				
.565				-.2523						
.600								-.5519		
.633	-.4397									
.637			-.1948							
.650							-.2559			
.670									-1.4828	
.700		-.1419				-.1227				
.723										-1.6256
.725					-.1224					
.727	-.0932									
.750							-.1988	-.4116		
.760				-.0967						
.775					-.2265	-.0886				
.793	.1507									
.798			-.1490							
.808				-.0989						
.834		-.0719								
.839			-.1823							
.850					-.0854	-.0182	-.0699			
.857				-.0401						
.862									-1.2158	
.865		-.1443								
.879			-.0633							
.900		.0408			-.0833			-.1960		
.905				-.0142						
.919			-.0250							
.950					-.0193	.0598	.0031			
.953				.0056						
.955			.0331							
.965		.0616								

AMES 11-073(OA148) -140A/B/C/R ORB LEFT WING TOP (XE3U61)

ALPHA (5) = 1 .962 BETA (2) = -3.827 MACH = .59660 Q = 594.44 P = 2386.0 RN/L = 4.8439

SECTION (1)LEFT WING TOP SURF DEPENDENT VARIABLE CP

2Y/BW	.2350	.2990	.3640	.4270	.5340	.6730	.7800	.8870	.9720	1.0000
X/CW										
.000	-.2749	-.7300	-.8920	-.5898	-.3329	-.4619	-.6438	-.9511	-2.4145	
.010		-.7326	-.5748		-1.7111	-1.8262	-2.2225	-2.6905		
.020		-.5250		.0000	-1.6556	-1.9525	-2.4364	-2.7968	-2.6538	
.040			-.3441	-1.0521						
.041	-.2392									
.050					-1.6632	-2.0275	-2.4796	-2.7209		
.069									-2.7298	
.080					-1.7151					
.081				-1.0610						
.086			-.3745							
.094		-.3801								
.113	-.2343									
.150					-1.2652	-1.4556	-1.3553	-1.6125		
.157									-2.1813	
.163			.0000							
.177				-.8987						
.229		-.4518								
.246			-.7544							
.247	-.1178									
.250					-.9205	-1.1448	-1.2423	-1.3453		
.274				-.7977						
.345									-2.2413	
.362		-.6225								
.390			-.6382							
.400					-.4887	-.6033		-.8614		
.402				-.5832						
.418										-2.2039
.429	-.2014									
.497		-.7096								
.503									-2.1899	
.547	-.5453									
.550					-.3283	-.3125				
.565				-.1790						
.600								-.5583		
.632	-.4855									
.637			-.2979							
.650							-.2623			
.670									-1.6107	
.700		-.1433				-.1595				
.723										-1.6478
.725					-.2412					
.727	-.1782									
.750							-.2015	-.4186		
.760				-.1317						
.775					-.3695	-.1524				

AMES 11-073(OA148) -140A/B/C/R ORB LEFT WING TOP (XE8U61)

ALPHA (5) = 11.962 BETA (2) = -3.827

SECTION (1)LEFT WING TOP SURF DEPENDENT VARIABLE CP

2Y/BW	.2350	.2990	.3640	.4270	.5340	.6730	.7800	.8870	.9720	1.0000
X/CW										
.793	.0665									
.798			-.1493							
.808				-.1519						
.834		-.1085								
.839			-.1795							
.850					-.0527	-.0570	-.0863			
.857				-.0815						
.862									-1.1812	
.865		-.1940								
.879			-.0716							
.900		-.0239			-.0161			-.2087		
.905				-.0380						
.919			-.0523							
.950					.0787	.0322	-.0202			
.953				.0127						
.955			-.0067							
.965		-.0051								

ALPHA (5) = 11.967 BETA (3) = .197 MACH = .59660 Q = 594.44 P = 2386.0 RN/L = 4.8439

SECTION (1)LEFT WING TOP SURF DEPENDENT VARIABLE CP

2Y/BW	.2350	.2990	.3640	.4270	.5340	.6730	.7800	.8870	.9720	1.0000
X/CW										
.000	-.4099	-.9083	-.9049	-.8218	-.5244	-.6703	-.8479	-1.1362	-2.5954	
.010		-.6155	-.4353		-1.8335	-1.9737	-2.3847	-2.8271		
.020		-.4787		.0000	-1.7018	-2.1271	-2.5664	-2.9010	-2.0549	
.040			-.4152	-.9357						
.041	-.3641									
.050					-1.6324	-2.0607	-2.5460	-2.7505		
.069									-1.9201	
.080					-1.6075					
.081				-.8756						
.086			-.4706							
.094		-.5218								
.113	-.2295									
.150					-1.1723	-1.4372	-1.4162	-1.7589		
.157									-1.8039	
.163			.0000							
.177				-.8942						
.229		-.6860								
.245			-.8183							
.247	-.1571									
.250					-.8459	-1.0909	-1.2008	-1.2452		

DATE 11 FEB 76 TABULATED PRESSURE DATA - OA148 (AMES 11-073-1) PAGE 4811

AMES 11-073(OA148) -140A/B/C/R ORB LEFT WING TOP (XE8U61)

ALPHA (5) = 11.967 BETA (3) = .197

SECTION (1)LEFT WING TOP SURF DEPENDENT VARIABLE CP

2Y/BW	.2350	.2990	.3640	.4270	.5340	.6730	.7800	.8870	.9720	1.0000
X/CW										
.274				-.8013						
.345									-1.9239	
.362		-.5729								
.390			-.7390							
.400					-.5621	-.5642		-.8314		
.402				-.5226						
.418										-1.9585
.429	-.2515									
.497		-.7102								
.503									-1.8354	
.547	-.5565									
.550					-.4379	-.3407				
.565				-.2982						
.600								-.5381		
.633	-.5064									
.637			-.3579							
.650							-.2508			
.670									-1.3083	
.700		-.1680				-.2217				
.723										-1.6049
.725					-.1676					
.727	-.1949									
.750							-.2084	-.3601		
.760				-.2513						
.775					-.2524	-.2433				
.793	.0194									
.798			-.1559							
.808				-.3191						
.834		-.1359								
.839			-.1833							
.850					-.0440	-.1209	-.1324			
.857				-.2068						
.862									-.9509	
.865		-.2279								
.879			-.0863							
.900		-.0620			-.0137			-.2022		
.905				-.1495						
.919			-.0563							
.950					.0395	-.0317	-.0477			
.953				-.0822						
.955			-.0100							
.965		-.0236								

AMES 11-073(OA148) -140A/B/C/R ORB LEFT WING TOP (XE8U61)

ALPHA (5) = 11.963 BETA (4) = 4.259 MACH = .59660 Q = 594.44 P = 2386.0 RN/L = 4.8439

SECTION (1)LEFT WING TOP SURF DEPENDENT VARIABLE CP

2Y/BW	.2350	.2990	.3540	.4270	.5340	.6730	.7800	.8870	.9720	1.0000
X/CW										
.000	-.5334	-1.0007	-.6160	-.9229	-.7056	-.8944	-1.0801	-1.3740	-2.5336	
.010		-.5495	-.4802		-1.8601	-2.1417	-2.5927	-2.6584		
.020		-.5308		.0000	-1.6826	-2.2502	-2.7372	-2.6391	-1.7583	
.040			-.4840	-.7604						
.041	-.5053									
.050					-1.5527	-2.0460	-2.6610	-2.4019		
.069									-1.6983	
.080					-1.4650					
.081				-.8260						
.086			-.5182							
.094		-.5756								
.113	-.2680									
.150					-1.0436	-1.3664	-1.4092	-1.9878		
.157									-1.5978	
.163			.0000							
.177				-.8547						
.229		-.7133								
.246			-.8722							
.247	-.2129									
.250					-.8313	-1.0035	-1.1518	-1.3656		
.274				-.7838						
.345									-1.5611	
.362		-.5135								
.390			-.8713							
.400					-.6237	-.5690		-.7439		
.402				-.6665						
.418										-1.4412
.429	-.2602									
.497		-.6443								
.503									-1.4759	
.547	-.5467									
.550					-.3704	-.4228				
.565				-.5722						
.600								-.4209		
.633	-.5147									
.637			-.2966							
.650							-.2933			
.670									-1.1375	
.700		-.2059				-.2942				
.723										-1.4662
.725					-.2384					
.727	-.2235									
.750							-.2705	-.2627		
.760				-.2657						
.775					-.3450	-.2690				

AMES 11-073(OA148) -140A/B/C/R ORB LEFT WING TOP (XEBU61)

ALPHA (5) = 11.963 BETA (4) = 4.259

SECTION (1)LEFT WING TOP SURF DEPENDENT VARIABLE CP

2Y/BW	.2350	.2990	.3640	.4270	.5340	.6730	.7800	.8870	.9720	1.0000
X/CW										
.793	-.0300									
.798			-.1725							
.808				-.3282						
.834		-.1765								
.839			-.1969							
.850					-.2268	-.0763	-.1859			
.857				-.1762						
.862									-.8525	
.865		-.2689								
.879			-.0995							
.900		-.0964			-.1437			-.1829		
.905				-.1093						
.919			-.0655							
.950					-.0599	.0285	-.1187			
.953				-.0328						
.955			-.0177							
.955		-.0397								

ALPHA (5) = 11.951 BETA (5) = 8.316 MACH = .59660 Q = 594.44 P = 2386.0 RN/L = 4.8439

SECTION (1)LEFT WING TOP SURF DEPENDENT VARIABLE CP

2Y/BW	.2350	.2990	.3640	.4270	.5340	.6730	.7800	.8870	.9720	1.0000
X/CW										
.000	-.6630	-1.0797	-.5598	-.9808	-.9217	-1.1319	-1.3400	-1.6331	-2.0406	
.010		-.5963	-.5170		-1.9113	-2.3151	-2.7488	-2.4437		
.020		-.6003		.0000	-1.6307	-2.3609	-2.0967	-2.4168	-1.5913	
.040			-.5260	-.7410						
.041	-.7137									
.050					-1.4232	-1.8852	-2.7671	-2.2379		
.069									-1.5437	
.080					-1.2752					
.081				-.7763						
.086			-.5660							
.094		-.6279								
.113	-.3326									
.150					-.9452	-1.2607	-1.3570	-2.0196		
.157									-1.4326	
.163			.0000							
.177				-.8048						
.229		-.8357								
.245			-1.0211							
.247	-.2543									
.250					-.8563	-.9121	-1.0821	-1.5369		

AMES 11-073(OA148) -140A/B/C/R ORB LEFT WING TOP (XEBU61)

ALPHA (5) = 11.951 BETA (5) = 8.316

SECTION (1)LEFT WING TOP SURF DEPENDENT VARIABLE CP

2Y/BW	.2350	.2990	.3640	.4270	.5340	.6730	.7800	.8870	.9720	1.0000
X/CW										
.274				-.7911						
.345									-1.3259	
.362		-.3989								
.390			-.7526							
.400					-.5888	-.6285		-.7335		
.402				-.8308						
.418										-1.2272
.429	-.2425									
.497		-.6180								
.503									-1.3447	
.547	-.5220									
.550					-.4555	-.4951				
.585				-.5628						
.600								-.3696		
.633	-.5189									
.637			-.3043							
.650							-.3782			
.670									-1.1055	
.700		-.2471				-.3321				
.723										-1.1912
.725					-.3478					
.727	-.2429									
.750							-.3495	-.2632		
.760				-.2567						
.775					-.5005	-.2387				
.793	-.0722									
.798			-.1932							
.808				-.3172						
.834		-.2005								
.839			-.2288							
.850					-.2781	-.0918	-.2366			
.857				-.1757						
.862									-.7760	
.865		-.2897								
.879			-.1286							
.900		-.1168			-.2393			-.1617		
.905				-.1067						
.919			-.0879							
.950					-.1539	-.0225	-.1413			
.953				-.0275						
.955			-.0313							
.965		-.0631								

AMES 11-073(OA148) -140A/B/C/R ORB LEFT WING TOP (XEBU62) (05 AUG 75)

REFERENCE DATA

SREF = 2690.0000 SQ.FT. XMRP = 1076.6800 IN. XO
LREF = 474.8000 IN. YMRP = .0000 IN. YO
BREF = 936.0680 IN. ZMRP = 375.0000 IN. ZO
SCALE = .0300

PARAMETRIC DATA

RUDDER = 5.000 SPDBRK = 55.000
BDFLAP = 16.300 L-ELVN = -4.000
R-ELVN = -4.000 MACH = 1.400

ALPHA (1) = -4.059 BETA (1) = -3.849 MACH = 1.3925 Q = 599.99 P = 442.06 RN/L = 2.9210

SECTION (1)LEFT WING TOP SURF DEPENDENT VARIABLE CP

2Y/BW	.2350	.2990	.3640	.4270	.5340	.6730	.7800	.8870	.9720	1.0000
X/CW										
.000	-.1322	-.1007	-.1007	.2909	.7050	.6526	.6092	.6304	-.3161	
.010		-.0297	.0099		.7526	.7378	.6992	.6259		
.020		-.0235		.0000	.6724	.6374	.6127	.5856	.0146	
.040			.0560	.3984						
.041	-.0463									
.050					.4626	.4323	.4139	.4074		
.059									-.0368	
.080					.2836					
.081				.3050						
.086			.1713							
.094		.0189								
.113	-.0292									
.150					.0517	.0598	.0980	.1207		
.157									-.1740	
.163			.0000							
.177				.1160						
.229		.0608								
.246			.1033							
.247	-.0219									
.250					-.0840	-.0942	-.0868	-.0878		
.274				-.0160						
.345									-.2107	
.362		.1453								
.390			-.0080							
.400					-.2089	-.2547		-.2843		
.402				-.1771						
.418										-.3877
.429	.0582									
.497		.0039								
.503									-.2486	
.547	.0764									
.550					-.2602	-.3002				
.555				-.1752						
.600								-.3561		
.633	-.0285									
.637			-.1462							
.650							-.3560			
.670									-.2422	

AMES 11-073(OA148) -140A/B/C/R ORB LEFT WING TOP (XEBU62)

ALPHA (1) = -4.059 BETA (1) = -3.849

SECTION (1)LEFT WING TOP SURF DEPENDENT VARIABLE CP

2Y/BW	.2350	.2990	.3640	.4270	.5340	.6730	.7800	.8870	.9720	1.0000
X/CW										
.700		-.1189				-.3144				
.723										-.4173
.725					-.0045					
.727	-.1042									
.750							-.2489	-.2448		
.760				.0142						
.775					.1993	-.0468				
.793	.2549									
.798			.0628							
.808				.3977						
.834		.1216								
.839			.3929							
.850					.3268	.0664	-.1674			
.857				.3767						
.862									-.1903	
.865		.2975								
.879			.3567							
.900		.3032			.3275			-.1387		
.905				.3254						
.919			.2748							
.950					.3266	.3257	.0577			
.953				.2859						
.955			.3195							
.965		.3554								

ALPHA (1) = -3.922 BETA (2) = .195 MACH = 1.3925 Q = 599.99 P = 442.06 RN/L = 2.9210

SECTION (1)LEFT WING TOP SURF DEPENDENT VARIABLE CP

2Y/BW	.2350	.2990	.3640	.4270	.5340	.6730	.7800	.8870	.9720	1.0000
X/CW										
.000	-.1532	-.0701	-.0499	.2600	.6322	.5632	.5210	.5330	-.3765	
.010		-.0467	.0064		.6593	.6455	.6084	.5387		
.020		-.0564		.0000	.5838	.5520	.5285	.5041	-.0684	
.040			.0339	.3137						
.041	-.1081									
.050					.3898	.3616	.3437	.3425		
.069									-.1075	
.080					.2211					
.081				.2378						
.086			.1314							
.094		-.0467								
.113	-.0899									
.150					.0250	.0287	.0590	.0856		

AMES 11-073(OA148) -140A/B/C/R ORB LEFT WING TOP (XE8U62)

ALPHA (1) = -3.922 BETA (2) = .195

SECTION (1)LEFT WING TOP SURF DEPENDENT VARIABLE CP

2Y/BW	.2350	.2990	.3640	.4270	.5340	.6730	.7800	.8870	.9720	1.0000
X/CW										
.157									-.2255	
.163			.0000							
.177				.0842						
.229		.0324								
.246			.0646							
.247	-.0485									
.250					-.0973	-.1032	-.1078	-.1120		
.274				-.0255						
.345									-.2475	
.362		.1179								
.390			-.0209							
.400					-.2065	-.2521		-.2933		
.402				-.1847						
.418										-.4483
.429	.0309									
.497		-.0244								
.503									-.2746	
.547	.0495									
.550					-.2511	-.2860				
.565				-.1675						
.600								-.3639		
.633	-.0591									
.637			-.0410							
.650							-.3451			
.670									-.2445	
.700		-.0758				-.2277				
.723										-.4799
.725					-.0080					
.727	-.1016									
.750							-.2308	-.2658		
.760				.0369						
.775					.2472	.0368				
.793	.2941									
.798			.0492							
.809				.3345						
.834		.0871								
.839			.3135							
.850					.3267	.1445	-.0275			
.857				.3040						
.862									-.1926	
.895		.2013								
.879			.2896							
.900		.2455			.2757			-.1395		
.905				.2667						
.919			.2115							

AMES 11-073(OA148) -140A/B/C/R ORB LEFT WING TOP (XEBU62)

ALPHA (1) = -3.922 BETA (2) = .195

SECTION (1)LEFT WING TOP SURF DEPENDENT VARIABLE CP

2Y/BW	.2350	.2990	.3640	.4270	.5340	.6730	.7800	.8870	.9720	1.0000
X/CW										
.950					.2714	.3244	.0832			
.953				.2248						
.955			.2588							
.965		.2955								

ALPHA (1) = -3.930 BETA (3) = 4.280 MACH = 1.3925 Q = 599.99 P = 442.06 RN/L = 2.921D

SECTION (1)LEFT WING TOP SURF DEPENDENT VARIABLE CP

2Y/BW	.2350	.2990	.3640	.4270	.5340	.6730	.7800	.8870	.9720	1.0000
X/CW										
.000	-.1604	-.0779	-.0282	.2551	.5614	.4805	.4331	.4352	-.4213	
.010		-.0850	.0004		.5694	.5515	.5171	.4527		
.020		-.1011		.0000	.5018	.4607	.4492	.4203	-.1420	
.040			.0227	.2606						
.041	-.1609									
.050					.3286	.2923	.2793	.2772		
.059									-.1711	
.080					.1798					
.081				.1961						
.086			.1028							
.094		-.0587								
.113	-.1477									
.150					.0063	.0002	.0280	.0451		
.157									-.2676	
.163			.0000							
.177				.0633						
.229		.0165								
.246			.0483							
.247	-.0656									
.250					-.1058	-.1175	-.1239	-.1354		
.274				-.0321						
.345									-.2789	
.362		.1070								
.390			-.0283							
.400					-.2105	-.2514		-.3034		
.402				-.1845						
.418										-.4869
.429	.0219									
.497		-.0403								
.503									-.2995	
.547	.0368									
.550					-.2458	-.2876				
.565				-.1560						

AMES 11-073(OA148) -140A/B/C/R ORB LEFT WING TOP (XE8U62)

ALPHA (1) = -3.930 BETA (3) = 4.280

SECTION (1)LEFT WING TOP SURF DEPENDENT VARIABLE CP

2Y/BW	.2350	.2990	.3640	.4270	.5340	.6730	.7800	.8870	.9720	1.0000
X/CW										
.630								-.3753		
.633	-.0357									
.637			.0336							
.650							-.3324			
.670									-.2434	
.700		-.0216				-.1043				
.723										-.5238
.725					.0224					
.727	-.0957									
.750							-.1421	-.2431		
.760				.0328						
.775					.2741	.0913				
.793	.3010									
.798			.0355							
.808				.2943						
.834		.0746								
.840			.2631							
.850					.3047	.1828	.0091			
.857				.2520						
.862									-.1808	
.865		.1519								
.879			.2334							
.900		.2035			.2291			-.0174		
.905				.2205						
.919			.1624							
.950					.2227	.3015	.1990			
.953				.1823						
.955			.2109							
.965		.2592								

ALPHA (2) = .024 BETA (1) = -3.867 MACH = 1.3922 Q = 599.78 P = 442.05 RN/L = 2.9172

SECTION (1)LEFT WING TOP SURF DEPENDENT VARIABLE CP

2Y/BW	.2350	.2990	.3640	.4270	.5340	.6730	.7800	.8870	.9720	1.0000
X/CW										
.000	-.0347	.0202	.0136	.4050	.7554	.7102	.6764	.6860	-.1451	
.010		.0209	.0370		.6046	.6458	.6020	.5097		
.020		-.0013		.0000	.5033	.5068	.4821	.4561	.0118	
.040			.0557	.2459						
.041	-.0352									
.050					.2823	.2717	.2560	.2558		
.069									-.0603	
.080					.1120					

AMES 11-073(OA148) -140A/B/C/R ORB LEFT WING TOP (XEBU62)

ALPHA (2) = .024 BETA (1) = -3.867

SECTION (1)LEFT WING TOP SURF DEPENDENT VARIABLE CP

2Y/BW	.2350	.2990	.3540	.4270	.5340	.6730	.7800	.8870	.9720	1.0000
X/CW										
.081				.1216						
.085			.1147							
.094		-.0560								
.113	-.0338									
.150					-.0878	-.0780	-.0395	-.0122		
.157									-.2178	
.163			.0000							
.177				-.0198						
.229		-.0023								
.248			-.0026							
.247	-.0549									
.250					-.2275	-.2309	-.2155	-.1999		
.274				-.1493						
.345									-.2754	
.362		.0673								
.390			-.1192							
.400					-.3265	-.3732		-.3793		
.402				-.2743						
.418										-.1767
.429	.0087									
.497		-.0804								
.503									-.3271	
.547	.0081									
.550					-.3585	-.4061				
.565				-.2717						
.600								-.4102		
.633	-.1167									
.637			-.2306							
.650							-.4517			
.670									-.3460	
.700		-.1960				-.4073				
.723										-.2404
.725					-.1084					
.727	-.1712									
.750							-.3707	-.3499		
.760				-.0618						
.775					-.0104	-.1268				
.793	.0258									
.798			-.0551							
.808				.1821						
.834		.0216								
.839			.2669							
.850					.0750	-.1561	-.2956			
.857				.2644						
.862									-.3178	

AMES 11-073(OA148) -140A/B/C/R ORB LEFT WING TOP (XEBU62)

ALPHA (2) = .024 BETA (1) = -3.867

SECTION (1)LEFT WING TOP SURF DEPENDENT VARIABLE CP

2Y/BW	.2350	.2990	.3640	.4270	.5340	.6730	.7900	.8870	.9720	1.0000
X/CW										
.865		.1852								
.879			.2757							
.900		.2295			.1573			-.2544		
.905				.2729						
.919			.2319							
.950					.2360	-.0673	-.1189			
.953				.2426						
.955			.2815							
.955		.2918								

ALPHA (2) = .029 BETA (2) = .195 MACH = 1.3922 Q = 599.78 P = 442.06 RN/L = 2.9172

SECTION (1)LEFT WING TOP SURF DEPENDENT VARIABLE CP

2Y/BW	.2350	.2990	.3640	.4270	.5340	.6730	.7800	.8870	.9720	1.0000
X/CW										
.000	-.0553	-.0257	-.0306	.3511	.6641	.6170	.5876	.5890	-.1959	
.010		-.0456	-.0149		.4926	.5418	.5092	.4214		
.020		-.0670		.0000	.3990	.4104	.3977	.3741	-.0603	
.040			.0115	.1672						
.041	-.0914									
.050					.2119	.2018	.1928	.1930		
.059									-.1223	
.080					.0579					
.081				.0606						
.085			.0674							
.094		-.1144								
.113	-.1016									
.150					-.1199	-.1140	-.0774	-.0469		
.157									-.2607	
.163			.0000							
.177				-.0532						
.229		-.0228								
.246			-.0314							
.247	-.1054									
.250					-.2345	-.2497	-.2391	-.2235		
.274				-.1562						
.345									-.3051	
.362		.0396								
.390			-.1261							
.400					-.3120	-.3726		-.3930		
.402				-.2719						
.418										-.1939
.429	-.0162									

DATE 11 FEB 76 TABULATED PRESSURE DATA - OA148 (AMES 11-073-1)

AMES 11-073(OA148) -140A/B/C/R ORB LEFT WING TOP (XEBU82)

ALPHA (2) = .029 BETA (2) = .185

SECTION (1)LEFT WING TOP SURF DEPENDENT VARIABLE CP

Z/BW	.2350	.2990	.3640	.4270	.5340	.6730	.7800	.8870	.9720	1.0000
X/CW										
.497		-.1040							-.3455	
.503										
.547	-.0162									
.550					-.3451	-.3951				
.565				-.2721						
.600								-.4257		
.633	-.1505									
.637			-.2240							
.650							-.4428			
.670									-.3417	
.700		-.1954				-.3586				
.723										-.2306
.725					-.1016					
.727	-.1743									
.750							-.3412	-.3564		
.760				-.0925						
.775					.0075	-.1256				
.793	.1743									
.798			-.0532							
.808				.1772						
.834		.0166								
.839			.1991							
.850					.1263	-.1176	-.2054			
.857				.2205						
.862									-.2842	
.865		.1158								
.879			.2036							
.900		.1483			.1801			-.2572		
.905				.2057						
.919			.1621							
.950					.2171	.0670	-.1031			
.953				.1806						
.955			.1925							
.965		.2150								

AMES 11-073(OA148) -140A/B/C/R ORB LEFT WING TOP (XEBU62)

ALPHA (2) = .025 BETA (3) = 4.257 MACH = 1.3922 Q = 599.78 P = 442.06 RN/L = 2.9172

SECTION (1)LEFT WING TOP SURF DEPENDENT VARIABLE CP

2Y/BW	.2350	.2990	.3640	.4270	.5340	.6730	.7800	.8870	.9720	1.0000
X/CW										
.000	-.0680	-.1045	-.0904	.2946	.5843	.5332	.4928	.4947	-.2032	
.010		-.1353	-.0625		.3869	.4399	.4059	.3233		
.020		-.1440		.0000	.3137	.3228	.3041	.2847	-.1222	
.040			-.0211	.1137						
.041	-.1376									
.050					.1529	.1322	.1191	.1219		
.059									-.1769	
.080					.0135					
.081				.0335						
.086			.0349							
.094		-.1601								
.113	-.1605									
.150					-.1344	-.1491	-.1152	-.0933		
.157									-.2985	
.163			.0000							
.177				-.0711						
.229		-.0334								
.246			-.0346							
.247	-.1359									
.250					-.2245	-.2693	-.2593	-.2533		
.274				-.1483						
.345									-.3238	
.362		.0399								
.390			-.1256							
.400					-.3065	-.3625		-.4090		
.402				-.2652						
.418										-.1572
.429	-.0160									
.497		-.1097								
.503									-.3536	
.547	-.0221									
.550					-.3400	-.3847				
.565				-.2621						
.600								-.4504		
.633	-.1679									
.637			-.1592							
.650							-.4319			
.670									-.3428	
.700		-.1738				-.2104				
.723										-.2558
.725					-.1145					
.727	-.1716									
.750							-.2884	-.3534		
.760				-.0879						
.775					.0384	-.1304				

AMES 11-073(OA148) -140A/B/C/R ORB LEFT WING TOP (XE8U62)

ALPHA (2) = .025 BETA (3) = 4.257

SECTION (1)LEFT WING TOP SURF DEPENDENT VARIABLE CP

2Y/BW	.2350	.2990	.3640	.4270	.5340	.6730	.7800	.8870	.9720	1.0000
X/CW										
.793	.1660									
.798			-.0500							
.808				.1624						
.834		.0009								
.839			.1575							
.850					.1582	-.0569	-.1765			
.857				.1752						
.862									-.2843	
.855		.0830								
.879			.1483							
.900		.0993			.1738			-.1790		
.905				.1601						
.919			.1112							
.950					.1778	.1357	-.1136			
.953				.1324						
.955			.1365							
.965		.1594								

ALPHA (3) = 3.958 BETA (1) = -3.867 MACH = 1.3919 Q = 599.88 P = 442.29 RN/L = 2.9189

SECTION (1)LEFT WING TOP SURF DEPENDENT VARIABLE CP

2Y/BW	.2350	.2990	.3640	.4270	.5340	.6730	.7800	.8870	.9720	1.0000
X/CW										
.000	.0504	.0246	-.0417	.3904	.7506	.7406	.7155	.7034	.0777	
.010		-.0209	-.0604		.3788	.4949	.4583	.3485		
.020		-.0374		.0000	.2824	.3290	.3201	.2814	-.0488	
.040			-.0509	.0391						
.041	-.0245									
.050					.0727	.1028	.0944	.0859		
.069									-.1016	
.080					-.0773					
.081				-.0656						
.086			-.0107							
.094		-.0855								
.113	-.0415									
.150					-.2877	-.2374	-.1872	-.1531		
.157									-.2768	
.163			.0000							
.177				-.1931						
.229		-.0872								
.245			-.1272							
.247	-.0631									
.250					-.3532	-.3701	-.3403	-.3093		

AMES 11-073(OA148) -140A/B/C/R ORB LEFT WING TOP (XEBU62)

ALPHA (3) = 3.958 BETA (1) = -3.867

SECTION (1)LEFT WING TOP SURF DEPENDENT VARIABLE CP

2Y/BW	.2350	.2990	.3640	.4270	.5340	.6730	.7800	.8870	.9720	1.0000
X/CW										
.274				-.2806						
.345									-.3458	
.362		-.0263								
.390			-.2249							
.400					-.4375	-.4819		-.4586		
.402				-.3634						
.418										-.1343
.429	-.0574									
.497		-.1603								
.503									-.4232	
.547	-.0659									
.550					-.4479	-.5139				
.565				-.3581						
.600								-.4818		
.633	-.2147									
.637			-.3097							
.650							-.4977			
.670									-.4813	
.700		-.2776				-.5058				
.723										-.3512
.725					-.1839					
.727	-.2453									
.750							-.4653	-.4173		
.760				-.1344						
.775					-.1694	-.2023				
.793	-.1738									
.798			-.1421							
.806				-.0379						
.834		-.0647								
.839			.0875							
.850					-.1329	-.1791	-.3143			
.857				.0618						
.862									-.4865	
.865		.0722								
.879			.1698							
.900		.1930			-.1008			-.3510		
.905				.1500						
.919			.1784							
.950					.0018	-.2168	-.2121			
.953				.1881						
.955			.1973							
.965		.2309								

AMES 11-073(OA148) -140A/B/C/R ORB LEFT WING TOP (XE8U62)

ALPHA (3) = 3.958 BETA (2) = .187 MACH ! = 1.3919 Q = 599.88 P = 442.29 RN/L = 2.9189

SECTION (1)LEFT WING TOP SURF DEPENDENT VARIABLE CP

2Y/BW	.2350	.2990	.3640	.4270	.5340	.6730	.7800	.8870	.9720	1.0000
X/CW										
.000	.0209	-.0821	-.2035	.2607	.6458	.6382	.6219	.6007	.0216	
.010		-.1340	-.2002		.2647	.3809	.3520	.2443		
.020		-.1350		.0000	.1767	.2303	.2288	.1880	-.1196	
.040			-.1523	-.0247						
.041	-.0747									
.050					.0037	.0290	.0254	.0141		
.069									-.1630	
.080					-.1306					
.081				-.1133						
.085			-.0733							
.094		-.1478								
.113	-.1022									
.150					-.3167	-.2758	-.2305	-.1966		
.157									-.3162	
.163			.0000							
.177				-.2092						
.229		-.1231								
.246			-.1418							
.247	-.1178									
.250					-.3642	-.3908	-.3672	-.3397		
.274				-.2815						
.345									-.3774	
.352		- 0343								
.390			-.2204							
.400					-.4286	-.4885		-.4759		
.402				-.3543						
.418										-.2558
.429	-.0725									
.497		-.1758								
.503									-.4436	
.547	-.0813									
.550					-.4186	-.5048				
.565				-.3479						
.600								-.4937		
.633	-.2352									
.637			-.3030							
.650							-.5092			
.670									-.4888	
.700		-.2763				-.4164				
.723										-.4958
.725					-.1648					
.727	-.2462									
.750							-.4427	-.4284		
.760				-.1488						
.775					-.1503	-.1830				

AMES 11-073(OA148) -140A/B/C/R ORB LEFT WING TOP (XEBUB2)

ALPHA (3) = 3.958 BETA (2) = .187

SECTION (1)LEFT WING TOP SURF DEPENDENT VARIABLE CP

2Y/BW	.2350	.2990	.3640	.4270	.5340	.6730	.7800	.8870	.9720	1.0000
X/CW										
.793	-.0045									
.798			-.1372							
.808				-.0155						
.834		-.0247								
.839			.0870							
.850					-.1035	-.1994	-.2887			
.857				.0525						
.862									-.4789	
.865		.0495								
.879			.1088							
.900		.1008			-.0431			-.3432		
.905				.1080						
.919			.1099							
.950					.0462	-.1887	-.2200			
.953				.1216						
.955			.1211							
.965		.1401								

ALPHA (3) = 3.953 BETA (3) = 4.243 MACH = 1.3919 Q = 599.88 P = 442.29 RN/L = 2.9189

SECTION (1)LEFT WING TOP SURF DEPENDENT VARIABLE CP

2Y/BW	.2350	.2990	.3640	.4270	.5340	.6730	.7800	.8870	.9720	1.0000
X/CW										
.000	-.0121	-.2244	-.4191	.1228	.5352	.5395	.5245	.5061	-.0614	
.010		-.2796	-.3675		.1430	.2590	.2365	.1375		
.020		-.2590		.0000	.0666	.1273	.1242	.0885	-.2014	
.040			-.2330	-.0916						
.041	-.1173									
.050					-.0703	-.0511	-.0567	-.0650		
.069									-.2322	
.080					-.1823					
.081				-.1528						
.086			-.1253							
.094		-.2126								
.113	-.1597									
.150					-.3244	-.3127	-.2780	-.2462		
.157									-.3594	
.163			.0000							
.177				-.2015						
.229		-.1320								
.245			-.1388							
.247	-.1626									
.250					-.3550	-.4127	-.3977	-.3741		

AMES 11-073(OA148) -140A/B/C/R ORB LEFT WING TOP (XEBU62)

ALPHA (3) = 3.963 BETA (3) = 4.246

SECTION (1)LEFT WING TOP SURF DEPENDENT VARIABLE CP

2Y/BW	.2350	.2990	.3640	.4270	.5340	.6730	.7800	.8870	.9720	1.000C
X/CW										
.274				-.2637						
.345									-.4146	
.362		-.0323								
.390			-.2100							
.400					-.3979	-.4855		-.4954		
.402				-.3360						
.419										-.4178
.429	-.0742									
.497		-.1801								
.503									-.4660	
.547	-.0816									
.550					-.4062	-.4848				
.565				-.3353						
.600								-.5020		
.633	-.2453									
.637			-.3032							
.650							-.3155			
.670									-.5079	
.700		-.2758				-.2511				
.723										-.5930
.725					-.1720					
.727	-.2417									
.750							-.3505	-.3767		
.760				-.1618						
.775					-.1381	-.1841				
.793	.1040									
.798			-.0895							
.808				-.0001						
.834		-.0290								
.839			.0816							
.850					-.0589	-.1940	-.2742			
.857				.0500						
.862									-.5259	
.865		.0243								
.879			.0660							
.900		.0277			-.0027			-.2502		
.905				.0769						
.919			.0515							
.950					.0669	-.1255	-.2191			
.953				.0734						
.955			.0641							
.965		.0621								

AMES 11-073(OA148) -140A/B/C/R ORB LEFT WING TOP (XEBU62)

ALPHA (4) = 7.927 BETA (1) = -3.866 MACH = 1.3932 Q = 600.00 P = 441.59 RN/L = 2.9182

SECTION (1)LEFT WING TOP SURF DEPENDENT VARIABLE CP

2Y/BW	.2350	.2990	.3640	.4270	.5340	.6730	.7800	.8870	.9720	1.0000
X/CW										
.000	.0924	-.0635	-.2186	.2653	.6913	.7121	.7059	.6725	.0199	
.010		-.1476	-.2433		.1574	.3064	.2676	.1386		
.020		-.1367		.0000	.0471	.1376	.1358	.0748	-.2285	
.040			-.1814	-.1556						
.041	-.0217									
.050					-.1219	-.0759	-.0761	-.1044		
.069									-.2560	
.080					-.2487					
.081				-.2559						
.086			-.1264							
.094		-.1201								
.113	-.0374									
.150					-.4241	-.3675	-.3290	-.2990		
.157									-.3973	
.163			.0000							
.177				-.3902						
.229		-.1253								
.246			-.2731							
.247	-.0604									
.250					-.5122	-.4807	-.4483	-.4176		
.274				-.4302						
.345									-.4864	
.362		-.1206								
.390			-.3326							
.400					-.5739	-.5703		-.4543		
.402				-.4496						
.418										-.3933
.479	-.1132									
.497		-.2601								
.503									-.4959	
.547	-.1667									
.550					-.5625	-.5281				
.565				-.4247						
.600								-.4592		
.633	-.3065									
.637			-.3952							
.650							-.4577			
.670									-.5580	
.700		-.3651				-.4637				
.723										-.5843
.725					-.3375					
.727	-.3168									
.750							-.4013	-.4235		
.760				-.2086						
.775					-.3171	-.3836				

AMES 11-073(OA148) -140A/B/C/R ORB LEFT WING TOP (XEBU62)

ALPHA (4) = 7.927 BETA (1) = -3.866

SECTION (1)LEFT WING TOP SURF DEPENDENT VARIABLE CP

2Y/BW	.2350	.2990	.3640	.4270	.5340	.6730	.7800	.8870	.9720	1.0000
X/CW										
.793	-.2843									
.798			-.2038							
.808				-.1939						
.834		-.1388								
.839			-.0413							
.850					-.2162	-.3599	-.3752			
.857				-.0917						
.862									-.5509	
.865		-.0088								
.879			.0733							
.900		.1559			-.1886			-.3758		
.905				.0105						
.919			.1443							
.950					-.1459	-.3007	-.3479			
.953				.0739						
.955			.1758							
.965		.1645								

ALPHA (4) = 7.932 BETA (2) = .179 MACH = 1.3932 Q = 600.00 P = 441.59 RN/L = 2.9182

SECTION (1)LEFT WING TOP SURF DEPENDENT VARIABLE CP

2Y/BW	.2350	.2990	.3640	.4270	.5340	.6730	.7800	.8870	.9720	1.0000
X/CW										
.000	.0383	-.2205	-.4403	.0573	.5433	.5832	.5861	.5483	-.1411	
.010		-.3012	-.3991		-.0042	.1507	.1240	.0076		
.020		-.2773		.0000	-.1055	.0037	.0082	-.0452	-.3494	
.040			-.3201	-.2891						
.041	-.0644									
.050					-.2505	-.1857	-.1740	-.2018		
.069									-.3546	
.080					-.3479					
.081				-.3465						
.086			-.2285							
.094		-.1848								
.113	-.0982									
.150					-.4814	-.4213	-.3839	-.3557		
.157									-.4529	
.163			.0000							
.177				-.4417						
.229		-.1819								
.245			-.2781							
.247	-.1170									
.250					-.5328	-.5122	-.4856	-.4550		

AMES 11-073(OA148) -140A/B/C/R ORB LEFT WING TOP (XEBU62)

ALPHA (4) = 7.932 BETA (2) = .179 :

SECTION (1)LEFT WING TOP SURF DEPENDENT VARIABLE CP

2Y/BW	.2350	.2990	.3640	.4270	.5340	.6730	.7800	.8870	.9720	1.0000
X/CW										
.274				-.3694						
.345									-.4908	
.362		-.1535								
.390			-.3047							
.400					-.5466	-.5789		-.4663		
.402				-.4103						
.418										-.5349
.429	-.1697									
.497		-.2679								
.503									-.5346	
.547	-.1577									
.550					-.4731	-.5233				
.565				-.4011						
.600								-.4681		
.633	-.3068									
.637			-.3922							
.650							-.4818			
.670									-.5419	
.700		-.3540				-.4745				
.723										-.4994
.725					-.2133					
.727	-.3029									
.750							-.4245	-.4190		
.760				-.1896						
.775					-.1891	-.3922				
.793	-.1317									
.799			-.1871							
.808				-.1296						
.834		-.0488								
.839			-.0019							
.850					-.1659	-.3969	-.403[illegible]			
.857				-.0623						
.862									-.5005	
.865		.0222								
.879			.0262							
.900		.0698			-.1581			-.3796		
.905				-.0253						
.919			.0870							
.950					-.0834	-.2925	-.3473			
.953				.0143						
.955			.1123							
.905		.0658								

AMES 11-073(OA148) -140A/B/C/R ORB LEFT WING TOP (XEBU62)

ALPHA (4) = 7.933 BETA (3) = 4.245 MACH = 1.3932 Q = 600.00 P = 441.59 RN/L = 2.9182

SECTION (1)LEFT WING TOP SURF DEPENDENT VARIABLE CP

2Y/BW	.2350	.2930	.3640	.4270	.5340	.6730	.7800	.8870	.9720	1.0000
X/CW										
.000	-.0208	-.4096	-.4176	-.1534	.3647	.4434	.4464	.4077	-.3158	
.010		-.3949	-.4128		-.1744	.0073	-.0235	-.1195		
.020		-.3649		.0000	-.2661	-.1203	-.1190	-.1662	-.4631	
.040			-.4010	-.3307						
.041	-.1138									
.050					-.3823	-.2768	-.2678	-.2979		
.069									-.4873	
.080					-.4534					
.081				-.3117						
.095			-.3773							
.094		-.3795								
.113	-.1590									
.150					-.5086	-.472.	-.4384	-.4184		
.157									-.4977	
.163			.0000							
.177				-.3214						
.229		-.2090								
.246			-.4377							
.247	-.1753									
.250					-.4790	-.5453	-.5218	-.4975		
.274				-.3406						
.345									-.5131	
.352		-.1166								
.390			-.2877							
.400					-.4515	-.5858		-.4890		
.402				-.3900						
.418										-.5102
.429	-.1668									
.497		-.2435								
.503									-.5207	
.547	-.1451									
.550					-.4470	-.5301				
.555				-.4122						
.600								-.4779		
.633	-.3039									
.637			-.3774							
.650							-.4926			
.670									-.4764	
.700		-.3295				-.4634				
.723										-.4486
.725					-.2251					
.727	-.2991									
.750							-.4483	-.4208		
.752				-.1905						
.775					-.1677	-.3332				

AMES 11-073(OA148) -140A/B/C/R ORB LEFT WING TOP (XE8062)

ALPHA (4) = 7.933 BETA (3) = 4.245

SECTION (1)LEFT WING TOP SURF DEPENDENT VARIABLE CP

2Y/BW	.2350	.2990	.3640	.4270	.5340	.6730	.7800	.8870	.9720	1.0000
X/CW										
.793	.0233									
.798			-.1547							
.808				-.1015						
.834		-.1105								
.839			-.0111							
.850					-.1156	-.2714	-.4062			
.857				-.0460						
.860									-.4624	
.865		-.0447								
.879			-.0071							
.900		-.0231			-.0724			-.3704		
.905				-.0313						
.919			.0279							
.950					-.0108	-.1239	-.3501			
.953				.0233						
.955			.0114							
.965		-.0039								

ALPHA (5) = 11.912 BETA (1) = -3.854 MACH = 1.3916 Q = 599.87 P = 442.53 RN/L = 2.9199

SECTION (1)LEFT WING TOP SURF DEPENDENT VARIABLE CP

2Y/BW	.2350	.2990	.3640	.4270	.5340	.6730	.7800	.8870	.9720	1.0000
X/CW										
.000	.0224	-.2403	-.3762	.1046	.5983	.6424	.6354	.5731	-.1816	
.010		-.2869	-.3400		-.0324	.1187	.0567	-.0800		
.020		-.2795		.0000	-.1397	-.0330	-.0610	-.1340	-.4950	
.040			-.2764	-.3265						
.041	-.0140									
.050					-.2902	-.2238	-.2339	-.2808		
.069									-.4907	
.080					-.3898					
.081				-.3996						
.086			-.2063							
.094		-.2010								
.113	-.0403									
.130					-.5184	-.4656	-.4311	-.4226		
.157									-.5173	
.153			.0000							
.177				-.4772						
.229		-.1719								
.248			-.2924							
.247	-.0578									
.250					-.5758	-.5020	-.4809	-.4519		

AMES 11-0.3(OA148) -140A/B/C/R ORB LEFT WING TOP (XEBJ62)

ALPHA (5) = 11.912 BETA (1) = -3.854

SECTION (1)LEFT WING TOP SURF DEPENDENT VARIABLE CP

2Y/BW	.2350	.2930	.3640	.4270	.5340	.6730	.7800	.8870	.9720	1.0000
X/CW										
.274				-.4746						
.345									-.5386	
.362		-.1517								
.390			-.3782							
.400					-.5369	-.4866		-.4641		
.402				-.4886						
.418										-.5427
.429	-.1357									
.497		-.3603								
.503									-.5452	
547	-.2000									
.550					-.4893	-.4840				
.565				-.4694						
.600								-.4540		
.633	-.4005									
.637			-.4574							
.650							-.4645			
.670									-.4926	
.700		-.4689				-.4859				
.723										-.4764
.725					-.4779					
.727	-.4096									
.750							-.4202	-.4404		
.760				-.3379						
.775					-.4585	-.4386				
.793	-.3794									
.798			-.2351							
.808				-.3565						
.834		-.1508								
[illegible]			-.1940							
[illegible]					-.4142	-.4263	-.4162			
.857				-.3696						
[illegible]									-.4872	
.888		-.0074								
.879			-.1207							
[illegible]		.139-			-.4139			-.4384		
[illegible]				-.2480						
[illegible]			-.1488							
[illegible]					-.3583	-.3159	-.3910			
[illegible]				-.[illegible]						
[illegible]			-.[illegible]							
[illegible]		.070								

AMES 11-073(OA148) -140A/B/C/R ORB LEFT WING TOP (XEBUSE)

ALPHA (5) = 11.921 BETA (2) = .184 MACH = 1.3916 Q = 599.87 P = 442.53 RN/L = 2.9199

SECTION (11)LEFT WING TOP SURF DEPENDENT VARIABLE CP

2Y/BW	.2350	.2930	.3640	.4270	.5340	.6730	.7800	.8870	.9720	1.0000
X/CW										
.000	-.0548	-.3512	-.3685	-.0950	.4295	.4811	.4794	.4156	-.3514	
.010		-.3118	-.3589		-.1822	-.0325	-.0903	-.2048		
.020		-.3100		.0000	-.2788	-.1710	-.1971	-.2597	-.5089	
.040			-.3487	-.3729						
.041	-.0843									
.050					-.4018	-.3316	-.3393	-.3776		
.069									-.5011	
.080					-.4817					
.081				-.4124						
.085			-.3207							
.094		-.2540								
.113	-.1284									
.150					-.5779	-.5266	-.4961	-.4879		
.157									-.4994	
.163			.0000							
.177				-.4342						
.229		-.4226								
.246			-.3909							
.247	-.1103									
.250					-.5931	-.5449	-.5143	-.4997		
.274				-.4668						
.345									-.5183	
.352		-.2965								
.392			-.4130							
.400					-.5568	-.5342		-.5158		
.402				-.5022						
.418										-.5162
.429	-.1965									
.497		-.4150								
.503									-.5177	
.547	-.2703									
.550					-.5395	-.5300				
.555				-.4698						
.600								-.4950		
.633	-.4159									
.637			-.4885							
.650							-.5020			
.670									-.4891	
.700		-.4311				-.5110				
.723										-.4705
.725					-.4708					
.727	-.3992									
.750							-.4587	-.4794		
.760				-.2492						
.775					-.4812	-.4805				

AMES 11-073(OA148) -140% B/C/R ORB LEFT WING TOP (XEBU62)

ALPHA (5) = 11.921 BETA (2) = .184

SECTION (1)LEFT WING TOP SURF DEPENDENT VARIABLE

2Y/BW	.2350	.2990	.3640	.4270	.5340	.6730	0	.8870	.9720	1.0000
X/CW										
.793	-.1966									
.798			-.2294							
.808				-.2687						
.834		-.1441								
.839			-.1168							
.850					-.4267	-.416				
.857				-.2526						
.862									-.4902	
.865		-.0465								
.879			-.0552							
.900		.0256			-.3478			-.4630		
.905				-.2765						
.919			-.0339							
.950					-.2563	-.3311	-.3700			
.953				-.3219						
.955			-.0922							
.965		.0206								

ALPHA (5) = 11.919 BETA (3) = 4.258 MACH = 1.3916 Q = 599.87 P = 442.53 RN/L = 2.9199

SECTION (1)LEFT WING TOP SURF DEPENDENT VARIABLE CP

2Y/BW	.2350	.2990	.3640	.4270	.5340	.6730	.7800	.8870	.9720	1.0000
X/CW										
.000	-.1523	-.3953	-.4146	-.3091	.2440	.3064	.3040	.2374	-.4739	
.010		-.3982	-.4115		-.3258	-.1810	-.2293	-.3452		
.020		-.3868		.0000	-.4036	-.3076	-.3272	-.3840	-.5355	
.040			-.4188	-.3972						
.041	-.1779									
.050					-.5002	-.4320	-.4394	-.4775		
.069									-.5362	
.080					-.5595					
.081				-.4258						
.086			-.3908							
.094		-.4442								
.113	-.1665									
.150					-.5903	-.5858	-.5577	-.5582		
.157									-.5388	
.163			.0000							
.177				-.4305						
.229		-.5416								
.246			-.4311							
.247	-.1987									
.250					-.5899	-.6295	-.5959	-.5690		

AMES 11-073(OA148) -140A/B/C/R ORB LEFT WING TOP (XEBU62)

ALPHA (5) = 11.919 BETA (3) = 4.258

SECTION (1)LEFT WING TOP SURF DEPENDENT VARIABLE CP

2Y/BW	.2350	.2990	.3640	.4270	.5340	.6730	.7800	.8870	.9720	1.0000
X/CW										
.274				-.4192						
.345									-.5450	
.362		-.3977								
.390			-.4178							
.400					-.6136	-.6076		-.5754		
.402				-.4698						
.418										-.5413
.429	-.2763									
.497		-.3770								
.503									-.5469	
.547	-.2443									
.550					-.5481	-.6053				
.565				-.4897						
.600								-.5451		
.633	-.3889									
.637			-.4702							
.650							-.5611			
.670									-.5270	
.700		-.3749				-.5216				
.723										-.5145
.725					-.2808					
.727	-.3729									
.750							-.5072	-.5297		
.760				-.2552						
.775					-.2729	-.4735				
.793	-.0550									
.798			-.2527							
.808				-.2516						
.834		-.1890								
.839			-.1317							
.850					-.2373	-.4839	-.4826			
.857				-.2177						
.862									-.5230	
.865		-.1532								
.879			-.0746							
.900		-.0675			-.2252			-.4967		
.905				-.1420						
.919			-.0635							
.940					-.2435	-.3315	-.3966			
.953				-.0807						
.955			-.0431							
.965		-.0691								

ORIGINAL PAGE IS OF POOR QUALITY

AMES 11-073(OA148) -140A/B/C/R ORB LEFT WING TOP (XEBU62)

ALPHA (6) = 15.912 BETA (1) = -3.830 MACH = 1.3897 Q = 599.83 P = 443.71 RN/L = 2.9243

SECTION (1)LEFT WING TOP SURF DEPENDENT VARIABLE CP

2Y/BW	.2350	.2990	.3640	.4270	.5340	.6730	.7800	.8870	.9720	1.0000
X/CW										
.000	-.0385	-.3331	-.3092	-.0246	.4852	.5216	.5088	.4147	-.3499	
.010		-.2928	-.2969		-.1876	-.0577	-.1367	-.2878		
.020		-.2837		.0000	-.2881	-.2082	-.2534	-.3338	-.5686	
.040			-.2769	-.3452						
.041	-.1634									
.050					-.4126	-.3590	-.3852	-.4393		
.069									-.5518	
.080					-.4894					
.081				-.3719						
.085			-.2563							
.094		-.2987								
.113	-.0478									
.150					-.5876	-.5477	-.5265	-.5353		
.157									-.5513	
.163			.0000							
.177				-.3963						
.229		-.3694								
.246			-.3688							
.247	-.0826									
.250					-.5615	-.5515	-.5355	-.5349		
.274				-.4413						
.345									-.5596	
.362		-.3853								
.390			-.4104							
.400					-.5535	-.5448		-.5403		
.402				-.5080						
.418										-.5821
.429	-.1667									
.497		-.4895								
.503									-.5810	
.547	-.2585									
.550					-.5575	-.5508				
.585				-.5372						
.600								-.5464		
.633	-.4831									
.637			-.5196							
.650							-.5350			
.670									-.5402	
.700		-.5232				-.5496				
.723										-.5129
.725					-.5250					
.727	-.5339									
.750							-.4900	-.5443		
.760				-.3324						
.775					-.5319	-.5076				

AMES 11-073(OA148) -140A/B/C/R ORB LEFT WING TOP (XE8U62)

ALPHA (6) = 15.912 BETA (1) = -3.830

SECTION (1)LEFT WING TOP SURF DEPENDENT VARIABLE CP

2Y/BW	.2350	.2990	.3640	.4270	.5340	.6730	.7800	.8870	.9720	1.0000
X/CW										
.793	-.3829									
.798			-.2861							
.808				-.3586						
.834		-.2435								
.839			-.2925							
.850					-.4655	-.4751	-.4874			
.857				-.3946						
.862									-.5352	
.865		-.1589								
.879			-.1854							
.900		-.0954			-.4638			-.5521		
.905				-.4149						
.919			-.1887							
.950					-.4131	-.4173	-.4634			
.953				-.3652						
.955			-.2195							
.965		-.0130								

ALPHA (6) = 15.924 BETA (2) = .184 MACH = 1.3897 Q = 599.83 P = 443.71 RN/L = 2.9243

SECTION (1)LEFT WING TOP SURF DEPENDENT VARIABLE CP

2Y/BW	.2350	.2990	.3640	.4270	.5340	.6730	.7800	.8870	.9720	1.0000
X/CW										
.000	-.1423	-.3734	-.3655	-.2419	.3073	.3476	.3303	.2339	-.4621	
.010		-.3689	-.3603		-.3251	-.1992	-.2649	-.3852		
.020		-.3691		.0000	-.4043	-.3288	-.3628	-.4318	-.5609	
.040			-.3641	-.3706						
.041	-.3214									
.050					-.5002	-.4486	-.4720	-.5166		
.069									-.5614	
.080					-.5573					
.081				-.4143						
.086			-.3324							
.094		-.3933								
.113	-.1331									
.152					-.5995	-.5954	-.5796	-.5880		
.157									-.5628	
.163			.0000							
.177				-.4606						
.229		-.4345								
.245			-.4482							
.247	-.1871									
.250					-.5905	-.5805	-.5621	-.5754		

AMES 11-073(OA148) -140A/B/C/R ORB LEFT WING TOP (XEBU82)

ALPHA (6) = 15.924 BETA (2) = .134

SECTION (1)LEFT WING TOP SURF DEPENDENT VARIABLE CP

2Y/BW	.2350	.2990	.3640	.4270	.5340	.6730	.7800	.8870	.9720	1.0000
X/CW										
.274				-.4994						
.345									-.5666	
.362		-.4781								
.390			-.4691							
.400					-.5789	-.5751		-.5752		
.402				-.5432						
.418										-.5617
.429	-.2636									
.497		-.5333								
.503									-.5734	
.547	-.3531									
.550					-.5744	-.5793				
.565				-.5223						
.600								-.5662		
.633	-.5075									
.637			-.5202							
.650							-.5654			
.670									-.5467	
.700		-.5084				-.5722				
.723										-.5363
.725					-.5500					
.727	-.5226									
.750							-.5213	-.5557		
.760				-.3240						
.775					-.5483	-.5251				
.793	-.3196									
.795			-.2586							
.800				-.3526						
.834		-.2170								
.839			-.1384							
.850					-.4969	-.4737	-.5040			
.857				-.3433						
.862									-.5486	
.865		-.1761								
.879			-.1443							
.900		-.0652			-.4879			-.5543		
.905				-.3487						
.919			-.2042							
.950					-.4808	-.3963	-.4589			
.953				-.3653						
.955			-.2099							
.965		-.0545								

DATE 11 FEB 76 TABULATED PRESSURE DATA - OA148 (AMES 11-073-1) PAGE 4841

AMES 11-073(OA148) -140A/B/C/R ORB LEFT WING TOP (XEBUS2)

ALPHA (6) = 15.916 BETA (3) = 4.288 MACH = 1.3897 Q = 599.83 P = 443.71 RN/L = 2.9243

SECTION (1)LEFT WING TOP SURF DEPENDENT VARIABLE CP

2Y/BW	.2350	.2930	.3640	.4270	.5340	.6730	.7800	.8870	.9720	1.0000
X/CW										
.000	-.2437	-.4229	-.4432	-.4201	.1221	.1726	.1537	.0647	-.5393	
.010		-.4231	-.4435		-.4392	-.3264	-.3816	-.4960		
.020		-.4276		.0000	-.5065	-.4376	-.4655	-.5287	-.5540	
.040			-.4444	-.4149						
.041	-.4379									
.059					-.5753	-.5324	-.5485	-.5880		
.069									-.5516	
.080					-.6148					
.081				-.4350						
.086			-.4049							
.094		-.4573								
.113	-.2280									
.150					-.6146	-.6350	-.6212	-.5773		
.157									-.5493	
.163			.0000							
.177				-.5041						
.229		-.4926								
.246			-.5123							
.247	-.2721									
.250					-.6174	-.6172	-.5973	-.5782		
.274				-.5098						
.345									-.5471	
.362		-.5314								
.390			-.4758							
.400					-.6051	-.6092		-.5711		
.402				-.5107						
.418										-.5455
.429	-.3479									
.497		-.5141								
.503									-.5505	
.547	-.3820									
.550					-.6260	-.6054				
.565				-.5223						
.600								-.5465		
.633	-.4656									
.637			-.4863							
.650							-.5807			
.670									-.5358	
.700		-.4348				-.5869				
.723										-.5251
.725					-.4799					
.727	-.4373									
.750							-.5542	-.5370		
.760				-.3629						
.775					-.4634	-.5494				

AMES 11-073(OA148) -140A/B/C/R ORB LEFT WING TOP (XEBU62)

ALPHA (6) = 15.915 BETA (3) = 4.288

SECTION (1)LEFT WING TOP SURF DEPENDENT VARIABLE CP

2Y/BW	.2350	.2990	.3640	.4270	.5340	.6730	.7800	.8870	.9720	1.0000
X/CW										
.793	-.2286									
.798			-.2953							
.808				-.3075						
.834		-.2379								
.839			-.2065							
.850					-.4418	-.4655	-.5302			
.857				-.2870						
.862									-.5301	
.865		-.2383								
.879			-.1459							
.900		-.1210			-.4570			-.5297		
.905				-.3141						
.919			-.1840							
.950					-.4781	-.3951	[illegible]048			
.953				-.3242						
.955			-.1885							
.965		-.1003								

AMES 11-073(OA148) -140A/B/C/R ORB LEFT WING TOP (XEBU63) (05 AUG 75)

REFERENCE DATA

SREF = 2690.0000 SQ.FT. XMRP = 1076.6800 IN. XO
LREF = 474.8000 IN. YMRP = .0000 IN. YO
BREF = 936.0690 IN. ZMRP = 375.0000 IN. ZO
SCALE = .0300

PARAMETRIC DATA

RUDDER = 5.000 SPDBRK = 55.000
BDFLAP = 16.300 L-ELVN = -4.000
R-ELVN = -4.000 MACH = 1.250

ALPHA (1) = -4.050 BETA (1) = -3.840 MACH = 1.2459 Q = 600.11 P = 552.28 RN/L = 3.0241

SECTION (1)LEFT WING TOP SURF DEPENDENT VARIABLE CP

2Y/BW	.2350	.2990	.3640	.4270	.5340	.6730	.7800	.8870	.9720	1.0000
X/CW										
.000	-.1999	-.0870	-.1189	.2610	.6601	.5966	.5550	.5775	-.4378	
.010		-.0340	-.0107		.7289	.7059	.6696	.5948		
.020		-.0373		.0000	.6501	.6054	.5802	.5512	-.0520	
.040			.0443	.4184						
.041	-.1014									
.050					.4420	.3977	.3801	.3677		
.069									-.1087	
.080					.2587					
.081				.3027						
.086			.1659							
.094		-.0051								
.113	-.0602									
.150					.0235	.0173	.0411	.0505		
.157									-.2520	
.163			.0000							
.177				.1032						
.229		.0537								
.246			.1027							
.247	-.0027									
.250					-.1259	-.1372	-.1316	-.1462		
.274				-.0338						
.345									-.2963	
.362		.1542								
.390			-.0109							
.400					-.2615	-.3108		-.3829		
.402				-.1973						
.418										-.5134
.429	.0497									
.497		.0186								
.503									-.3373	
.547	.0805									
.550					-.1713	-.3587				
.555				.0244						
.600								-.4406		
.633	-.0458									
.637			.1524							
.650							-.4267			
.670									-.3184	

AMES 11-073(OA148) -140A/B/C/R ORB LEFT WING TOP (XEB063)

ALPHA (1) = -4.050 BETA (1) = -3.840

SECTION (1)LEFT WING TOP SURF DEPENDENT VARIABLE CP

2Y/BW	.2350	.2990	.3640	.4270	.5340	.6730	.7800	.8870	.9720	1.0000
X/CW										
.700		.1293				-.0746				
.723										-.5333
.725					.0715					
.727	-.0483									
.750							-.0049	-.2067		
.760				.0530						
.775					.3931	.1748				
.793	.3477									
.799			.0518							
.808				.4224						
.834		.0907								
.839			.4094							
.850					.3596	.3175	.2476			
.857				.3350						
.862									-.1878	
.865		.3551								
.879			.3195							
.900		.2629			.3199			.0816		
.905				.2964						
.919			.2878							
.940					.3296	.3981	.3896			
.953				.3014						
.955			.2966							
.965		.3241								

ALPHA (1) = -3.916 BETA (2) = .196 MACH = 1.2459 Q = 600.11 P = 552.28 RN/L = 3.0241

SECTION (1)LEFT WING TOP SURF DEPENDENT VARIABLE CP

2Y/BW	.2350	.2990	.3640	.4270	.5340	.6730	.7800	.8870	.9720	1.0000
X/CW										
.000	-.2177	-.0795	-.0719	.2369	.5967	.5136	.4673	.4823	-.5023	
.010		-.0572	-.0080		.6491	.6219	.5830	.5188		
.020		-.0805		.0000	.5777	.5309	.5047	.4795	-.1327	
.040			.0301	.3504						
.041	-.1713									
.050					.3687	.3361	.3191	.3130		
.059									-.1730	
.080					.2216					
.081				.2452						
.085			.1293							
.094		-.0270								
.113	-.1185									
.150					.0071	-.0096	.0137	.0284		

AMES 11-073(OA:46) -140A/B/C/R ORB LEFT WING TOP (XE6U63)

ALPHA (1) = -3.916 BETA (2) = .196

SECTION (1)LEFT WING TOP SURF DEPENDENT VARIABLE CP

2Y/BW	.2350	.2990	.3640	.4270	.5340	.6730	.7800	.8870	.9720	1.0000
X/CW										
.157									-.3069	
.163			.0000							
.177				.0877						
.229		.0282								
.246			.0724							
.247	-.0236									
.250					-.1231	-.1527	-.1520	-.1729		
.274				-.0384						
.345									-.3286	
.362		.1353								
.390			-.0244							
.400					-.2545	-.3022		-.3924		
.402				-.1938						
.418										-.5799
.429	.0332									
.497		-.0090								
.503									-.3621	
.547	.0526									
.550					.0123	-.3354				
.565				.1184						
.600								-.4297		
.633	-.0544									
.637			.1922							
.650							-.3650			
.673									-.2675	
.700		.1864				-.0221				
.723										-.6038
.725					.0784					
.727	.0902									
.750							.1415	-.0618		
.769				.0309						
.775					.3601	.2105				
.793	.3411									
.798			.0222							
.808				.3578						
.834		.0583								
.839			.3414							
.850					.2879	.2143	.3281			
.857				.2737						
.862									-.0062	
.865		.2748								
.879			.2560							
.900		.2082			.2308			.1390		
.905				.2160						
.919			.2062							

ORIGINAL PAGE IS OF POOR QUALITY

DATE 11 FEB 75 TABULATED PRESSURE DATA - OA148 (AMES 11-073-1)

AMES 11-073(OA148) -140A/B/C/R ORB LEFT WING TOP (XEBU63)

ALPHA (1) = -3.916 BETA (2) = .196

SECTION (1)LEFT WING TOP SURF DEPENDENT VARIABLE CP

2Y/BW	.2350	.2990	.3640	.4270	.5340	.6730	.7800	.8870	.9720	1.0000
X/CW										
.950					.2671	.3477	.3728			
.953				.2254						
.955			.2267							
.965		.2557								

ALPHA (1) = -3.923 BETA (3) = 4.275 MACH = 1.2459 Q = 600.11 P = 552.28 RN/L = 3.0241

SECTION (1)LEFT WING TOP SURF DEPENDENT VARIABLE CP

2Y/BW	.2350	.2990	.3640	.4270	.5340	.6730	.7800	.8870	.9720	1.0000
X/CW										
.000	-.1986	-.1031	-.0385	.2560	.5347	.4353	.3808	.3907	-.5581	
.010		-.1117	-.0018		.5707	.5380	.4972	.4347		
.020		-.1252		.0000	.5011	.4498	.4244	.4011	-.2144	
.040			.0257	.3038						
.041	-.2171									
.050					.3371	.2760	.2543	.2458		
.069									-.2436	
.080					.1812					
.081				.2068						
.086			.1142							
.094		-.0393								
.113	-.1685									
.150					-.0102	-.0358	-.0078	-.0050		
.157									-.3609	
.163			.0000							
.177				.0693						
.229		.0140								
.246			.0685							
.247	-.0236									
.250					-.1317	-.1727	-.1655	-.2057		
.274				-.0470						
.345									-.3697	
.362		.1370								
.390			-.0396							
.400					-.2501	-.2998		-.4001		
.402				-.1942						
.418										-.6261
.429	.0366									
.497		-.0314								
.503									-.3235	
.547	.0463									
.550					.0665	-.0698				
.565				.1599						

AMES 11-073(OA148) -140A/B/C/R ORB LEFT WING TOP (XEB063)

ALPHA (1) = -3.923 BETA (3) = 4.275

SECTION (1)LEFT WING TOP SURF DEPENDENT VARIABLE CP

2Y/BW	.2350	.2990	.3640	.4270	.5340	.6730	.7800	.8870	.9720	1.0000
X/CW										
.620								-.4233		
.633	-.0736									
.637			.2047							
.650							-.1184			
.670									-..843	
.700		.2010				.0242				
.723										-.5299
.725					.0745					
.727	.1287									
.750							.2109	.0780		
.760				.0117						
.775					.3192	.1986				
.793	.3353									
.790			.0001							
.809				.2925						
.834		.0384								
.839			.2764							
.850					.2390	.1337	.2917			
.857				.2222						
.862									.0752	
.865		.1984								
.879			.2108							
.900		.1657			.1559			.3248		
.905				.1703						
.919			.1493							
.950					.1908	.2845	.3323			
.953				.1592						
.955			.1803							
.965		.2191								

ALPHA (2) = .044 BETA (1) = -3.884 MACH = 1.2451 Q = 599.58 P = 552.51 PN/L = 3.0238

SECTION (1)LEFT WING TOP SURF DEPENDENT VARIABLE CP

2Y/BW	.2350	.2990	.3640	.4270	.5340	.6730	.7800	.8870	.9720	1.0000
X/CW										
.000	-.0868	.0094	.0011	.4174	.7196	.6681	.6348	.6447	-.2453	
.010		-.0053	.0333		.5751	.6024	.5565	.4704		
.020		-.0312		.0000	.4693	.4576	.4424	.4142	-.0536	
.040			.0530	.2455						
.041	-.0844									
.050					.2398	.2059	.2013	.2018		
.069									-.1330	
.080					.0476					

AMES 11-073(OA148) -140A/B/C/R ORB LEFT WING TOP (XEBU83)

ALPHA (2) = .044 BETA (1) = -3.864

SECTION (1)LEFT WING TOP SURF DEPENDENT VARIABLE CP

2Y/BW	.2330	.2930	.3640	.4270	.5340	.6730	.7800	.8870	.9720	1.0000
X/CW										
.081				.1210						
.086			.1115							
.094		-.0890								
.113	-.0631									
.150					-.1579	-.1488	-.1236	-.1084		
.157									-.3143	
.163			.0000							
.177				-.0596						
.229		-.0088								
.246			-.0235							
.247	-.0783									
.250					-.2705	-.3204	-.3100	-.3014		
.274				-.1884						
.345									-.3752	
.362		.0791								
.380			-.1468							
.400					-.3772	-.4470		-.4938		
.402				-.3260						
.418										-.2549
.439	.0061									
.497		-.0916								
.503									-.4343	
.547	-.0025									
.550					-.4020	-.4854				
.585				-.3023						
.600								-.5163		
.633	-.1418									
.637			-.1738							
.650							-.5393			
.670									-.4549	
.700		-.2068				-.1882				
.723										-.2750
.725					-.0596					
.727	-.2101									
.750							-.3563	-.3913		
.760				-.0050						
.775					.1005	-.1369				
.793	.1777									
.798			-.0038							
.808				.3306						
.834		.0333								
.879			.3291							
.880					.2544	-.0332	-.1544			
.887				.2952						
.882									-.3909	

AMES 11-073(OA148) -140A/B/C/R ORB LEFT WING TOP (XEBU63)

ALPHA (2) = .044 BETA (1) = -3.864

SECTION (1)LEFT WING TOP SURF DEPENDENT VARIABLE CP

2Y/BW	.2350	.2990	.3640	.4270	.5340	.6730	.7800	.8870	.9720	1.0000
X/CW										
.865		.2682								
.879			.2780							
.900		.2180			.2615			-.2085		
.905				.2395						
.919			.2280							
.950					.2773	.2890	-.0593			
.953				.2334						
.955			.2356							
.955		.2663								

ALPHA (2) = .050 BETA (2) = .180 MACH = 1.2451 Q = 599.58 P = 552.51 RN/L = 3.0238

SECTION (1)LEFT WING TOP SURF DEPENDENT VARIABLE CP

2Y/BW	.2350	.2990	.3640	.4270	.5340	.6730	.7800	.8870	.9720	1.0000
X/CW										
.000	-.1041	-.0596	-.0268	.3677	.6417	.5815	.5447	.5468	-.3001	
.010		-.0927	-.0086		.4877	.5150	.4784	.3877		
.020		-.1169		.0000	.3900	.3800	.3634	.3379	-.1284	
.040			.0146	.1738						
.041	-.1534									
.050					.1814	.1513	.1479	.1418		
.069									-.1996	
.080					.0101					
.081				.0734						
.086			.0720							
.094		-.1385								
.113	-.1349									
.150					-.1728	-.1790	-.1612	-.1366		
.157									-.3576	
.163			.0000							
.177				-.0755						
.229		-.0195								
.246			-.0419							
.247	-.1186									
.250					-.2681	-.3202	-.3280	-.3235		
.274				-.1774						
.345									-.3981	
.352		.0663								
.390			-.1461							
.400					-.3691	-.4445		-.5049		
.402				-.3242						
.418										-.1756
.429	-.0065									

DATE 11 FEB 76

TABULATED PRESSURE DATA - OA148 (AMES 11-073-1)

AMES 11-073(OA148) -140A/B/C/R ORB LEFT WING TOP (XE8U63)

ALPHA (2) = .050 BETA (2) = .180

SECTION (1)LEFT WING TOP SURF DEPENDENT VARIABLE CP

2Y/BW	.2350	.2990	.3640	.4270	.5340	.6730	.7800	.8870	.9720	1.0000
X/CW										
.497		-.1093							-.4356	
.503										
.547	-.0148									
.550					-.3724	-.4635				
.565				-.2280						
.600								-.5159		
.633	-.1570									
.637			-.0365							
.650							-.5336			
.670									-.4406	
.700		-.0833				-.1740				
.723										-.2803
.725					-.0704					
.727	-.1893									
.750							-.2427	-.3180		
.760				-.0578						
.775					.1795	-.0978				
.793	.2132									
.798			-.0512							
.808				.2692						
.834		-.0091								
.839			.2491							
.850					.2380	.0668	-.1095			
.857				.2287						
.862									-.2926	
.865		.1772								
.879			.1991							
.900		.1428			.1866			-.1596		
.905				.1773						
.919			.1598							
.950					.2031	.2756	.0589			
.953				.1626						
.955			.1709							
.965		.1970								

DATE 11 FEB 76 TABULATED PRESSURE DATA - OA148 (AMES 11-073-1)

AMES 11-073(OA148) -140A/B/C/R CRB LEFT WING , (XEBU63)

ALPHA (2) = .046 BETA (3) = 4.256 MACH = 1.2451 Q = 599.58 P = 552.51 RN/L = 3.0238

SECTION (1)LEFT WING TOP SURF DEPENDENT VARIABLE CP

2Y/BW	.2350	.2990	.3640	.4270	.5340	.6730	.7800	.8870	.9720	1.0000
X/CW										
.000	-.1124	-.1577	-.0850	.3251	.5787	.5039	.4618	.4634	-.2070	
.010		-.1961	-.0530		.3986	.4230	.3854	.3008		
.020		-.2023		.0000	.3136	.2957	.2758	.2496	-.1759	
.040			-.0127	.1373						
.041	-.1963									
.050					.1264	.0905	.0777	.0729		
.069									-.2360	
.080					-.0254					
.081				.0421						
.086			.0432							
.094		-.1549								
.113	-.1944									
.150					-.1846	-.2162	-.2018	-.1800		
.157									-.3831	
.163			.0000							
.177				-.0742						
.229		-.0358								
.246			-.0352							
.247	-.1233									
.250					-.2774	-.3304	-.3463	-.3512		
.274				-.1758						
.345									-.4094	
.362		.0641								
.390			-.1513							
.400					-.3586	-.4404		-.5172		
.402				-.3170						
.418										-.2145
.429	-.0007									
.497		-.1195								
.503									-.4438	
.547	-.0194									
.550					-.2379	-.4513				
.565				-.0820						
.600								-.5232		
.633	-.1776									
.637			.0065							
.650							-.5157			
.670									-.3864	
.700		-.0045				-.1637				
.723										-.3478
.725					-.0573					
.727	-.1196									
.750							-.1237	-.2166		
.760				-.0754						
.775					.2116	-.0041				

AMES 11-073(OA148) -140A/B/C/R ORB LEFT WING TOP (XEBU63)

ALPHA (2) = .046 BETA (3) = 4.256

SECTION (1)LEFT WING TOP SURF DEPENDENT VARIABLE CP

2Y/BW	2350	.2990	.3640	.4270	.5340	.6730	.7800	.8870	.9720	1.0000
X/CW										
.793	2104									
.798			-.0731							
.808				.2121						
.834		-.0296								
.839			.1659							
.850					.2031	.0990	-.0089			
.857				.1648						
.862									-.1878	
.865		.1253								
.879			.1380							
.900		.0873			.1240			-.1035		
.905				.1267						
.919			.0956							
.950					.1280	.2328	.1334			
.953				.0968						
.955			.1120							
.965		.1383								

ALPHA (3) = 3.930 BETA (1) = -3.864 MACH = 1.2448 Q = 599.34 P = 552.51 RN/L = 3.0213

SECTION (1)LEFT WING TOP SURF DEPENDENT VARIABLE CP

2Y/BW	2350	.2990	.3640	.4270	.5340	.6730	.7800	.8870	.9720	1.0000
X/CW										
.000	.0006	-.0054	-.1070	.4053	.7295	.7061	.6843	.6690	.0484	
.010		-.0606	-.1262		.3451	.4455	.4062	.2751		
.020		-.0827		.0000	.2306	.2654	.2553	.2090	-.1258	
.040			-.0852	.0350						
.041	-.0694									
.050					.0179	.0251	.0140	-.0068		
.069									-.1847	
.080					-.1544					
.081				-.0884						
.086			-.0198							
.094		-.1396								
.113	-.0710									
.150					-.3499	-.3345	-.2850	-.2563		
.157									-.3864	
.163			.0000							
.177				-.2325						
.229		-.1045								
.245			-.1397							
.247	-.1004									
.250					-.4425	-.4766	-.4549	-.4223		

AMES 11-073(OA148) -140A/B/C/R ORB LEFT WING TOP (XEBU63)

ALPHA (3) = 3.990 BETA (1) = -3.864

SECTION (1)LEFT WING TOP SURF DEPENDENT VARIABLE CP

2Y/BW	.2350	.2990	.3640	.4270	.5340	.6730	.7800	.8870	.9720	1.0000
X/CW										
.274				-.3230						
.345									-.4668	
.362		-.0058								
.390			-.2553							
.400					-.4987	-.5853		-.5880		
.402				-.4216						
.418										-.2280
.429	-.0478									
.497		-.1825								
.503									-.5411	
.547	-.0741									
.550					-.5062	-.6162				
.565				-.3991						
.600								-.5769		
.633	-.2503									
.637			-.3486							
.650							-.5130			
.670									-.6204	
.700		-.3233				-.2889				
.723										-.5117
.725					-.1363					
.727	-.2973									
.750							-.3951	-.3948		
.760				-.0823						
.775					-.1332	-.1711				
.793	.0053									
.798			-.0725							
.808				.0942						
.834		-.0191								
.839			.2254							
.850					-.0402	-.2013	-.3346			
.857				.1931						
.862									-.6916	
.865		.2012								
.879			.2273							
.900		.1962			.0665			-.2769		
.905				.2075						
.919			.1849							
.950					.1851	-.1227	-.2705			
.953				.2038						
.955			.2017							
.965		.2282								

AMES 11-073(OA148) -140A/B/C/R ORB LEFT WING TOP (XEBU83)

ALPHA (3) = 3.091 BETA (2) = .185 MACH = 1.2448 Q = 599.34 P = 552.51 RN/L = 3.0213

SECTION (1)LEFT WING TOP SURF DEPENDENT VARIABLE CP

Y/BW	.2350	.2590	.3640	.4270	.5340	.6730	.7800	.8870	.9720	1.0000
X/CW										
.000	-.0380	-.1458	-.2900	.2792	.6353	.6200	.5946	.5745	-.0256	
.010		-.2042	-.2385		.2346	.3457	.3076	.1817		
.020		-.1985		.0000	.1494	.1851	.1696	.1153	-.2040	
.040			-.1420	-.0286						
.041	-.1390									
.050					-.0343	-.0359	-.0481	-.0720		
.069									-.2515	
.080					-.1861					
.081				-.1274						
.085			-.0564							
.094		-.2089								
.113	-.1466									
.150					-.3532	-.3622	-.3214	-.2961		
.157									-.4246	
.163			.0000							
.177				-.2212						
.229		-.1008								
.246			-.1450							
.247	-.1589									
.250					-.4295	-.4878	-.4736	-.4511		
.274				-.2994						
.345									-.4925	
.362		-.0118								
.390			-.2481							
.400					-.4765	-.5764		-.6012		
.402				-.4110						
.418										-.3881
.429	-.0536									
.497		-.1952								
.503									-.5579	
.547	-.0861									
.550					-.4913	-.5926				
.555				-.3828						
.600								-.6000		
.633	-.2582									
.637			-.2650							
.650							-.5519			
.670									-.6331	
.700		-.3218				-.2741				
.723										-.6812
.725					-.1738					
.727	-.2958									
.750							-.3913	-.3783		
.760				-.1269						
.775					-.1181	-.1777				

AMES 11-073(OA148) -140A/B/C/R ORB LEFT WING TOP (XEBU63)

ALPHA (3) = 3.991 BETA (2) = .185

SECTION (1)LEFT WING TOP SURF DEPENDENT VARIABLE CP

2Y/BW	.2350	.2990	.3640	.4270	.5340	.6730	.7800	.8870	.9720	1.0000
X/CW										
.793	.1234									
.798			-.1214							
.808				.0984						
.834		-.0405								
.839			.1610							
.850					.0132	-.2126	-.3330			
.857				.1437						
.862									-.6116	
.865		.0693								
.879			.1501							
.900		.1207			.0944			-.2567		
.905				.1330						
.919			.1058							
.950					.1508	-.0488	-.2422			
.953				.1162						
.955			.1224							
.965		.1471								

ALPHA (3) = 3.994 BETA (3) = 4.245 MACH = 1.2448 Q = 599.34 P = 552.51 RN/L = 3.0213

SECTION (1)LEFT WING TOP SURF DEPENDENT VARIABLE CP

2Y/BW	.2350	.2990	.3640	.4270	.5340	.6730	.7800	.8870	.9720	1.0000
X/CW										
.000	-.0602	-.3227	-.3727	.1503	.5486	.5278	.5063	.4791	-.1325	
.010		-.3640	-.2729		.1336	.2303	.1872	.0588		
.020		-.3296		.0000	.0585	.0837	.0671	.0025	-.3022	
.040			-.2174	-.0723						
.041	-.1771									
.050					-.0939	-.1076	-.1303	-.1607		
.069									-.3314	
.080					-.2170					
.081				-.1341						
.006			-.1835							
.094		-.2741								
.113	-.2027									
.150					-.3592	-.3981	-.3688	-.3532		
.157									-.4748	
.163			.0000							
.177				-.2206						
.229		-.1113								
.246			-.1248							
.247	-.2041									
.250					-.4152	-.4998	-.5013	-.4873		

AMES 11-073(OA148) -140A/B/C/R ORB LEFT WING TOP (XEBU63)

ALPHA (3) = 3.994 BETA (3) = 4.245

SECTION (1)LEFT WING TOP SURF DEPENDENT VARIABLE CP

2Y/BW	.2350	.2990	.3640	.4270	.5340	.6730	.7800	.8870	.9720	1.0000
X/CW										
.274				-.2861						
.345									-.5403	
.362		-.0034								
.390			-.2331							
.400					-.4657	-.5730		-.6218		
.402				-.3977						
.418										-.5965
.429	-.0427									
.497		-.1953								
.503									-.5797	
.547	-.0818									
.550					-.4563	-.5656				
.565				-.3209						
.600								-.5436		
.633	-.2733									
.637			-.2116							
.650							-.5072			
.670									-.5882	
.700		-.2950				-.2397				
.723										-.6881
.725					-.1711					
.727	-.2877									
.750							-.3978	-.3280		
.760				-.1574						
.775					-.0412	-.1810				
.793	.1411									
.798			-.1009							
.800				.1019						
.834		-.0599								
.839			.1242							
.850					.0851	-.1651	-.2575			
.857				.0879						
.862									-.5802	
.865		.0561								
.879			.0849							
.900		.0407			.0880			-.2355		
.905				.0612						
.919			.0420							
.950					.1010	.0652	-.1550			
.953				.0419						
.955			.0538							
.965		.0595								

AMES 11-073(OA148) -140A/B/C/R ORB LEFT WING TOP (XE8U63)

ALPHA (4) = 7.958 BETA (1) = -3.863 MACH = 1.2457 Q = 599.38 P = 551.80 RN/L = 3.0207

SECTION (1)LEFT WING TOP SURF DEPENDENT VARIABLE CP

Z/BW	.2350	.2990	.3640	.4270	.5340	.6730	.7900	.8870	.9720	1.0000
X/CW										
.000	.0514	-.1237	-.3498	.2180	.6386	.6599	.6642	.6139	-.0850	
.010		-.2156	-.3674		.0354	.1940	.1533	.0009		
.020		-.1978		.0000	-.0749	.0205	.0121	-.0700	-.3897	
.040			-.2737	-.2437						
.041	-.0694									
.050					-.2464	-.1998	-.2057	-.2515		
.069									-.4101	
.080					-.3800					
.081				-.3671						
.086			-.1946							
.094		-.1821								
.113	-.0730									
.150					-.5487	-.4967	-.4620	-.4435		
.157									-.5411	
.163			.0000							
.177				-.4660						
.229		-.1729								
.246			-.2981							
.247	-.1072									
.250					-.6219	-.6110	-.5854	-.5534		
.274				-.4406						
.345									-.5271	
.362		-.1368								
.390			-.3479							
.400					-.6507	-.6711		-.5320		
.402				-.4976						
.418										-.5434
.429	-.1565									
.487		-.2858								
.503									-.5012	
.547	-.1582									
.550					-.5312	-.5606				
.565				-.4684						
.600								-.4788		
.633	-.3358									
.637			-.4458							
.650							-.5059			
.670									-.4471	
.700		-.4207				-.5190				
.723										-.4387
.735					-.3054					
.737	-.3550									
.750							-.4711	-.4291		
.760				-.1913						
.775					-.2905	-.4161				

AMES 11-073(OA148) -140A/B/C/R ORB LEFT WING TOP (XEBU83)

ALPHA (4) = 7.969 BETA (1) = -3.863

SECTION (1)LEFT WING TOP SURF DEPENDENT VARIABLE CP

2Y/BW	.2350	.2990	.3640	.4270	.5340	.6730	.7800	.8870	.9720	1.0000
X/CW										
.793	-.1992									
.798			-.1690							
.809				-.0337						
.834		-.0381								
.839			.1359							
.850					-.1682	-.4387	-.4269			
.857				.0303						
.862									-.4222	
.865		.1409								
.879			.1544							
.900		.2225			-.0867			-.3901		
.905				.0634						
.919			.1708							
.950					-.0185	-.3006	-.3373			
.953				.1050						
.955			.1821							
.965		.1933								

ALPHA (4) = 7.973 BETA (2) = .179 MACH = 1.2457 Q = 599.38 P = 551.80 RN/L = 3.0207

SECTION (1)LEFT WING TOP SURF DEPENDENT VARIABLE CP

2Y/BW	.2350	.2990	.3640	.4270	.5340	.6730	.7800	.8870	.9720	1.0000
X/CW										
.000	-.0058	-.3271	-.5495	-.0245	.4993	.5490	.5445	.4914	-.2744	
.010		-.3905	-.5106		-.1003	.0683	.0209	-.1234		
.020		-.3741		.0000	-.2059	-.0850	-.1006	-.1792	-.5224	
.040			-.4121	-.3666						
.041	-.1276									
.050					-.3316	-.2783	-.2903	-.3409		
.069									-.5160	
.080					-.4257					
.081				-.3132						
.086			-.3143							
.094		-.2551								
.113	-.1527									
.150					-.5535	-.5370	-.5070	-.4930		
.157									-.5305	
.163			.0000							
.177				-.3666						
.229		-.2392								
.245			-.2754							
.247	-.1696									
.250					-.6001	-.6299	-.6136	-.5844		

(XEBU53)

DATE 11 FEB 76 TABULATED PRESSURE DATA - OA148 (AMES 11-073-1)

AMES 11-073(OA148) -140A/B/C/R ORB LEFT WING TOP

ALPHA (4) = 7.973 BETA (2) = .179

SECTION (1)LEFT WING TOP SURF DEPENDENT VARIABLE CP

2Y/BW	.2350	.2990	.3640	.4270	.5340	.6730	.7800	.8870	.9720	1.0000
X/CW										
.274				-.3022					-.5659	
.345										
.352		-.1165								
.390			-.3408							
.400					-.5684	-.6746		-.5659		
.402				-.4617						-.5572
.418										
.429	-.1525									
.497		-.2784							-.5457	
.503										
.547	-.1499									
.550					-.5327	-.5959				
.565				-.4653						
.600								-.5106		
.633	-.3369									
.637			-.4685							
.650							-.5272			
.670									-.4935	
.700		-.4085				-.5134				
.723										-.4592
.725					-.1974					
.727	-.3589									
.750							-.4866	-.4294		
.760				-.1792						
.775					-.1766	-.3772				
.793	-.0222									
.798			-.1675							
.808				.0025						
.834		-.0569								
.839			.0357							
.850					-.1010	-.3653	-.4398			
.857				.0191						
.862									-.4688	
.865		.0264								
.879			.1412							
.900		.1311			-.0729			-.3931		
.905				.0098						
.919			.1149							
.950					-.0173	-.2020	-.3731			
.953				.0127						
.955			.1031							
.965		.0981								

AMES 11-073(OA148) -140A/B/C/R ORB LEFT WING TOP (XE8U63)

ALPHA (4) = 7.897 BETA (3) = 4.244 MACH = 1.2457 Q = 599.38 P = 551.80 RN/L = 3.0207

SECTION (1)LEFT WING TOP SURF DEPENDENT VARIABLE CP

EY/BW	.2350	.2990	.3640	.4270	.5340	.6730	.7800	.8870	.9720	1.0000
X/CW										
.000	-.0511	-.5363	-.5048	-.1826	.3682	.4229	.4147	.3545	-.4702	
.010		-.4824	-.4887		-.2074	-.0606	-.1184	-.2521		
.020		-.4743		.0000	-.2927	-.1937	-.2127	-.3003	-.5819	
.040			-.4602	-.2232						
.041	-.1703									
.050					-.3935	-.3606	-.3717	-.4338		
.069									-.5705	
.080					-.4643					
.081				-.2628						
.090			-.4073							
.094		-.5007								
.113	-.2095									
.150					-.5548	-.5708	-.5522	-.5492		
.157									-.5741	
.163			.0000							
.177				- 2972						
.229		-.2473								
.246			-.3531							
.247	-.2301									
.250					-.5010	-.6457	-.6427	-.6238		
.274				-.3543						
.345									-.6005	
.352		-.0236								
.390			-.2598							
.400					-.5050	-.6645		-.6157		
.402				-.4613						
.418										-.5983
.429	-.1345									
.497		-.2383								
.503									-.5981	
.547	-.1304									
.550					-.5124	-.6024				
.555				-.4796						
.600								-.5522		
.633	-.3524									
.637			-.4150							
.650							-.5714			
.670									-.5558	
.700		-.3845				-.4528				
.723										-.5128
.725					-.2074					
.727	-.3597									
.750							-.5130	-.4400		
.760				-.1867						
.775					-.0976	-.2776				

AMES 11-073(OA148) -140A/B/C/R ORB LEFT WING TOP (XE9053)

ALPHA (4) = 7.897 BETA (3) = 4.244

SECTION : 1)LEFT WING TOP SURF DEPENDENT VARIABLE CP

2Y/BW	.2350	.2990	.3640	.4270	.5340	.6730	.7800	.8870	.9720	1.0000
X/CW										
.793	.0557									
.798			-.1611							
.808				-.0142						
.834		-.1250								
.839			.0353							
.850					.0108	-.1949	-.4474			
.857				-.0110						
.862									-.5344	
.865		-.0467								
.879			.0545							
.900		.0001			-.0131			-.3972		
.905				.0035						
.915			.0137							
.950					-.0022	-.0715	-.3757			
.952				.0085						
.955			.0218							
.965		.0068								

ALPHA (5) = 11.559 BETA (1) = -3.850 MACH = 1.2456 Q = 599.55 P = 552.04 RN/L = 3.0223

SECTION : 1)LEFT WING TOP SURF DEPENDENT VARIABLE CP

2Y/BW	.2350	.2990	.3640	.4270	.5340	.6730	.7800	.8870	.9720	1.0000
X/CW										
.000	.0494	-.3266	-.4917	-.0032	.5117	.5505	.5379	.4439	-.3578	
.010		-.3958	-.4610		-.1895	-.0461	-.1315	-.2853		
.020		-.3851		.0700	-.3032	-.2018	-.2531	-.3504	-.5668	
.040			-.3807	-.4583						
.041	-.0653									
.050					-.4483	-.3922	-.4159	-.4839		
.069									-.5468	
.080					-.5494					
.081				-.5184						
.086			-.3043							
.094		-.2617								
.113	-.0810									
.150					-.6809	-.6329	-.6052	-.5770		
.157									-.5446	
.153			.0000							
.177				-.6000						
.229		-.2308								
.245			-.3808							
.247	-.1090									
.250					-.6752	-.6054	-.5617	-.5628		

AMES 11-073(OA148) -140A/B/C/R ORB LEFT WING TOP (XEBU63)

ALPHA (5) = 11.969 BETA (1) = -3.850

SECTION (1)LEFT WING TOP SURF DEPENDENT VARIABLE CP

2Y/BW	.2350	.2990	.3640	.4270	.5340	.6730	.7800	.8870	.9720	1.0000
X/CW										
.274				-.5755						
.345									-.5456	
.352		-.1959								
.390			-.4742							
.400					-.6378	-.6037		-.5956		
.402				-.5812						
.418										-.5423
.429	-.1924									
.497		-.4530								
.503									-.5406	
.547	-.2845									
.550					-.6051	-.5745				
.585				-.5449						
.600								-.5456		
.633	-.4667									
.637			-.5103							
.650							-.5401			
.670									-.5042	
.700		-.5072				-.5505				
.723										-.4896
.725					-.5440					
.727	-.4483									
.750							-.4928	-.5362		
.760				-.3212						
.775					-.5255	-.5322				
.793	-.1759									
.798			-.2801							
.808				-.3150						
.834		-.0516								
.839			-.0455							
.850					-.4706	-.4580	-.4774			
.857				-.2195						
.862									-.4947	
.865		.0332								
.879			-.0986							
.900		.1225			-.4157			-.5072		
.905				-.1508						
.910			-.1281							
.950					-.3612	-.3558	-.4159			
.953				-.0824						
.955			-.0906							
.905		.0463								

AMES 11-073(OA148) -140A/B/C/R ORB LEFT WING TOP (XEBU63)

ALPHA (5) = 11.877 BETA (2) = .185 MACH = 1.2456 Q = 599.56 P = 552.04 RN/L = 3.0223

SECTION (1)LEFT WING TOP SURF DEPENDENT VARIABLE CP

2Y/BW	.2350	.2990	.3640	.4270	.5340	.6730	.7800	.8870	.9720	1.0000
X/CW										
.000	-.0306	-.4787	-.4720	-.2043	.3368	.3855	.3674	.2728	-.5256	
.010		-.4195	-.4585		-.3393	-.1973	-.2833	-.4327		
.020		-.4064		.0000	-.4402	-.3426	-.3948	-.4795	-.6181	
.040			-.4478	-.4856						
.041	-.1378									
.050					-.5615	-.4992	-.5290	-.5871		
.069									-.5746	
.080					-.6418					
.081				-.5093						
.086			-.4193							
.094		-.4515								
.113	-.1786									
.150					-.7433	-.6967	-.6590	-.6394		
.157									-.5662	
.163			.0000							
.177				-.4896						
.229		-.5293								
.246			-.4641							
.247	-.1680									
.250					-.7193	-.6772	-.6191	-.6387		
.274				-.5091						
.345									-.5615	
.362		-.3656								
.390			-.4469							
.400					-.6866	-.6739		-.6123		
.402				-.5155						
.418										-.5587
.429	-.2554									
.497		-.4105								
.503									-.5584	
.547	-.2466									
.550					-.6449	-.6318				
.565				-.5202						
.600								-.5705		
.633	-.4472									
.637			-.5570							
.650							-.5737			
.670									-.5460	
.700		-.4779				-.5869				
.723										-.5258
.725					-.4537					
.727	-.4343									
.750							-.5224	-.5553		
.760				-.1872						
.775					-.3551	-.5601				

AMES 11-073(OA148) -140A/B/C/R ORB LEFT WING TOP (XE8U63)

ALPHA (5) = 11.877 BETA (2) = .185

SECTION (1)LEFT WING TO P SURF DEPENDENT VARIABLE CP

2Y/BW	.2350	.2990	.3640	.4270	.5340	.6730	.7800	.8970	.9720	1.0000
X/CW										
.793	-.1337									
.798			-.2449							
.808				-.1307						
.834		-.1254								
.839			.0156							
.850					-.2867	-.4930	-.4794			
.857				-.2003						
.862									-.5375	
.865		-.0361								
.879			.1069							
.900		.0889			-.2483			-.5396		
.905				-.2680						
.919			-.0129							
.950					-.1651	-.3575	-.4249			
.953				-.2701						
.955			-.0525							
.965		.0302								

ALPHA (5) = 11.890 BETA (3) = 4.256 MACH = 1.2456 Q = 599.56 P = 552.04 RN/L = 3.0223

SECTION (1)LEFT WING TO P SURF DEPENDENT VARIABLE CP

2Y/BW	.2350	.2990	.3640	.4270	.5340	.6730	.7800	.8870	.9720	1.0000
X/CW										
.000	-.0905	-.5098	-.5176	-.4312	.1518	.1995	.1903	.0912	-.6390	
.010		-.4967	-.5162		-.4882	-.3556	-.4152	-.5411		
.020		-.4924		.0000	-.5647	-.4856	-.5149	-.5870	-.5976	
.040			-.5226	-.4298						
.041	-.2007									
.050					-.6581	-.6033	-.6209	-.6714		
.069									-.5884	
.080					-.6771					
.081				-.4130						
.086			-.4919							
.094		-.5654								
.113	-.2254									
.150					-.6773	-.6974	-.6549	-.6638		
.157									-.5772	
.163			.0000							
.177				-.4422						
.229		-.6656								
.245			-.4843							
.247	-.2606									
.250					-.6408	-.6812	-.6559	-.6543		

AMES 11-073(OA148) -140A/B/C/R ORB LEFT WING TOP (XEBU63)

ALPHA (5) = 11.890 BETA (3) = 4.256

SECTION (1)LEFT WING TO> SURF DEPENDENT VARIABLE CP

2Y/BW	.2350	.2990	.3640	.4270	.5340	.6730	.7800	.8870	.9720	1.0000
X/CW										
.274				-.4606						
.345									-.5677	
.362		-.3539								
.390			-.5515							
.400					-.6247	-.6361		-.5941		
.402				-.5183						
.418										-.5614
.420	-.2822									
.497		-.3646								
.503									-.5729	
.547	-.2152									
.550					-.5496	-.6152				
.565				-.5323						
.600								-.5817		
.633	-.4126									
.637			-.5076							
.650							-.6012			
.670									-.5605	
.700		-.4024				-.5686				
.723										-.5347
.725					-.1921					
.727	-.4104									
.750							-.5681	-.5604		
.760				-.2337						
.775					-.1544	-.4664				
.793	-.0217									
.798			-.2123							
.808				-.1906						
.834		-.2040								
.839			-.0211							
.850					-.1719	-.4821	-.5415			
.857				-.1183						
.862									-.5463	
.865		-.1015								
.879			-.0197							
.900		-.0262			-.2656			-.5459		
.905				-.0420						
.919			.0332							
.950					-.3417	-.1790	-.4616			
.953				-.1010						
.955			.0313							
.965		.0161								

AMES 11-073(OA148) -140A/B/C/R ORB LEFT WING TOP (XE8U64) (05 AUG 75)

PEFERENCE DATA

SREF = 2690.0000 SQ.FT. XMRP = 1076.6800 IN. XO
LREF = 474.8000 IN. YMRP = .0000 IN. YO
BREF = 935.0680 IN. ZMRP = 375.0000 IN. ZO
SCALE = .0300

PARAMETRIC DATA

RUDDER = 5.000 SPDBRK = 55.000
BDFLAP = 16.300 L-ELVN = -4.000
R-ELVN = -4.000 MACH = 1.100

ALPHA (1) = -3.951 BETA (1) = -3.840 MACH = 1.0981 Q = 598.93 P = 709.54 RN/L = 3.1905

SECTION (1)LEFT WING TOP SURF DEPENDENT VARIABLE CP

2Y/BW	.2350	.2990	.3640	.4270	.5340	.6730	.7800	.8870	.9720	1.0000
X/CW										
.000	-.2836	-.1132	-.1509	.2710	.5913	.5264	.4736	.4907	-.6168	
.010		-.0532	-.0407		.7137	.6876	.6518	.5719		
.020		-.0490		.0000	.6425	.5963	.5658	.5265	-.1363	
.040			.0462	.4687						
.041	-.1468									
.050					.4363	.3848	.3626	.3377		
.069									-.1988	
.020					.2562					
.061				.3557						
.086			.2544							
.094		-.0155								
.113	-.1151									
.150					.0262	.0008	.0069	-.0045		
.157									-.3546	
.163			.0000							
.177				.0861						
.229		.0288								
.246			.1758							
.247	.0051									
.250					-.1476	-.2000	-.2221	-.2617		
.274				-.0255						
.345									-.3684	
.362		.2122								
.390			-.0062							
.400					-.0342	-.2014		-.4729		
.402				-.1421						
.418										-.7060
.429	.1219									
.497		.0070								
.503									-.3995	
.547	.1394									
.550					.0860	-.0555				
.565				.1885						
.600								-.2371		
.633	-.0158									
.637			.2345							
.650							-.1738			
.670									.1242	

AMES 11-073(OA148) -140A/B/C/R ORB LEFT WING TOP (XE8U64)

ALPHA (1) = -3.951 BETA (1) = -3.840

SECTION (1)LEFT WING TOP SURF DEPENDENT VARIABLE CP

2Y/BW	.2350	.2990	.3640	.4270	.5340	.6730	.7800	.8870	.9720	1.0000
X/CW										
.700		.2601				-.0382				
.723										-.6502
.725					.0051					
.727	.2225									
.750							.4627	.3672		
.760				-.0350						
.775					.4685	.3506				
.793	.3586									
.798			-.0032							
.808				.4347						
.834		.0304								
.839			.4102							
.850					.3618	.3164	.3700			
.857				.3416						
.862									.2083	
.865		.3700								
.879			.3290							
.900		.2641			.3036			.3218		
.905				.2962						
.919			.2833							
.950					.2688	.3262	.3181			
.953				.2566						
.955			.2566							
.965		.2817								

ALPHA (1) = -3.948 BETA (2) = .196 MACH = 1.0981 Q = 598.93 P = 709.54 RN/L = 3.1905

SECTION (1)LEFT WING TOP SURF DEPENDENT VARIABLE CP

2Y/BW	.2350	.2990	.3640	.4270	.5340	.6730	.7800	.8870	.9720	1.0000
X/CW										
.000	-.2750	-.1174	-.0942	.2835	.5415	.4485	.3919	.4078	-.6921	
.010		-.0889	-.0246		.6544	.6270	.5930	.5315		
.020		-.0803		.0000	.5910	.5403	.5272	.4944	-.2087	
.040			.0567	.4267						
.041	-.2399									
.050					.3988	.3575	.3435	.3331		
.069									-.2477	
.080					.2330					
.081				.3354						
.086			.2397							
.094		-.0442								
.113	-.1850									
.150					.0390	.0241	.0337	.0113		

AMES 11-073(OA148) -140A/B/C/R ORB LEFT WING TOP (XEBU84)

ALPHA (1) = -3.948 BETA (2) = .196

SECTION (1)LEFT WING TOP SURF DEPENDENT VARIABLE CP

2Y/BW	.2350	.2990	.3640	.4270	.5340	.6730	.7800	.8870	.9720	1.0000
X/CW										
.157									-.3614	
.133			.0000							
.177				.1104						
.229		.0175								
.246			.1713							
.247	-.0163									
.250					-.1116	-.1636	-.1771	-.2310		
.274				-.0110						
.345									-.2883	
.362		.2039								
.390			.0038							
.400					.0464	-.0396		-.2948		
.402				-.0354						
.418										-.7853
.429	.1193									
.497		.0548								
.503									-.2980	
.547	.1494									
.550					.0738	-.0636				
.565				.1692						
.600								-.3058		
.633	.0542									
.637			.2122							
.650							-.1876			
.670									.0814	
.700		.2421				-.0773				
.723										-.7890
.725					-.0227					
.727	.2206									
.750							.2606	.2283		
.760				-.0831						
.775					.3309	.1857				
.793	.3307									
.798			-.0776							
.808				.3119						
.834		-.0383								
.839			.2972							
.850					.2481	.2019	.2912			
.857				.2168						
.862									.1540	
.865		.2552								
.872			.2049							
.900		.1422			.2185			.2697		
.905				.2038						
.919			.1854							

AMES 11-073(OA148) -140A/B/C/R ORB LEFT WING TOP (XEBU64)

ALPHA (1) = -3.948 BETA (2) = .196

SECTION (1)LEFT WING TOP SURF DEPENDENT VARIABLE CP

2Y/BW	.2350	.2990	.3640	.4270	.5340	.6730	.7800	.8870	.9720	1.0000
X/CW										
.950					.2174	.2722	.2711			
.953				.1863						
.955			.1816							
.965		.2039								

ALPHA (1) = -3.942 BETA (3) = 4.273 MACH = 1.0981 Q = 598.93 P = 709.54 RN/L = 3.1905

SECTION (1)LEFT WING TOP SURF DEPENDENT VARIABLE CP

2Y/BW	.2350	.2990	.3640	.4270	.5340	.6730	.7800	.8870	.9720	1.0000
X/CW										
.000	-.2735	-.1431	-.0448	.3349	.4936	.3806	.3037	.3065	-.7621	
.010		-.0956	.0041		.5989	.5479	.5084	.4499		
.020		-.0783		.0000	.5331	.4779	.4489	.4164	-.3042	
.040			.0632	.3976						
.041	-.3028									
.050					.3648	.3182	.2939	.2732		
.069									-.3170	
.080					.2178					
.081				.3171						
.086			.2634							
.094		-.0604								
.113	-.2436									
.150					.0390	.0135	.0119	-.0098		
.157									-.3772	
.163			.0000							
.177				.1267						
.229		.0322								
.246			.1769							
.247	-.0332									
.250					-.0929	-.1627	-.1741	-.2098		
.274				.0123						
.345									-.3261	
.362		.2195								
.390			.0201							
.400					.0305	-.0436		-.3065		
.402				-.0418						
.418										-.4044
.429	.1200									
.497		.0567								
.503									-.2909	
.547	.1464									
.550					.0473	-.0760				
.565				.1443						

AMES 11-073(OA148) -140A/B/C/R ORB LEFT WING TOP (XEBU64)

ALPHA (1) = -3.942 BETA (3) = 4.273

SECTION (1)LEFT WING TOP SURF DEPENDENT VARIABLE CP

2Y/BW	.2350	.2990	.3640	.4270	.5340	.6730	.7800	.8870	.9720	1.0000
X/CW										
.600								-.3236		
.633	.0499									
.637			.1852							
.650							-.2105			
.670									.0283	
.700		.2128				-.1160				
.723										-.5410
.725					-.0595					
.727	.1857									
.750							.1184	.1203		
.760				-.1019						
.775					.2317	.0730				
.793	.3062									
.798			-.0998							
.808				.2143						
.834		-.0671								
.839			.2063							
.850					.1216	.0240	.1895			
.857				.1192						
.862									.1166	
.865		.1460								
.879			.1055							
.900		.0543			.0693			.2147		
.905				.0601						
.919			.0602							
.950					.1278	.1946	.2162			
.953				.0969						
.955			.1005							
.965		.1292								

ALPHA (2) = .059 BETA (1) = -3.863 MACH = 1.0998 Q = 599.80 P = 708.37 RN/L = 3.1909

SECTION (1)LEFT WING TOP SURF DEPENDENT VARIABLE CP

2Y/BW	.2350	.2990	.3640	.4270	.5340	.6730	.7800	.8870	.9720	1.0000
X/CW										
.000	-.1509	-.0472	-.0133	.4543	.6738	.6086	.5720	.5871	-.3600	
.010		-.0686	.0296		.5600	.5743	.5269	.4126		
.020		-.1032		.0000	.4565	.4237	.3935	.3506	-.1413	
.040			.0529	.2927						
.041	-.1583									
.050					.2139	.1643	.1411	.1191		
.069									-.2297	
.080					.0127					

DATE 11 FEB 75 TABULATED PRESSURE DATA - OA148 (AMES 11-073-1)

AMES 11-073(OA148) -140A/B/C/R ORB LEFT WING TOP (XEBU64)

ALPHA (2) = .059 BETA (1) = -3.863

SECTION (1)LEFT WING TOP SURF DEPENDENT VARIABLE CP

2Y/BW	.2350	.2990	.3640	.4270	.5340	.6730	.7800	.8870	.9720	1.0000
X/CW										
.081				.1440						
.086			.1447							
.094		-.0978								
.113	-.1198									
.150					-.2240	[illegible]	.[illegible]273	-.2147		
.157									-.4422	
.163			.0000							
.177				-.0777						
.229		-.0230								
.246			.0156							
.247	-.0854									
.250					-.3360	-.4057	-.4255	-.4322		
.274				-.2176						
.345									-.4766	
.362		.1109								
.390			-.1829							
.400					-.4599	-.5553		-.6463		
.402				-.3871						
.416										-.1447
.429	.0655									
.497		-.1030								
.503									-.5006	
.547	.0273									
.550					-.0639	-.3867				
.565				.0378						
.600								-.2992		
.633	-.2010									
.637			.1119							
.650							-.2947			
.670									-.2311	
.700		.0997				.0266				
.723										-.2947
.725					.0352					
.727	.0268									
.750							.0094	-.1677		
.760				.0096						
.775					.3735	.2654				
.793	.2772									
.798			.0304							
.808				.3778						
.834		.0271								
.839			.3470							
.850					.3257	.2915	.3280			
.857				.2973						
.862									-.1095	

AMES 11-073(OA148) -140A/B/C/R ORB LEFT WING TOP (XEBU64)

ALPHA (2) = .059 BETA (1) = -3.863

SECTION (1)LEFT WING TOP SURF DEPENDENT VARIABLE CP

2Y/BW	.2350	.2990	.3640	.4270	.5340	.6730	.7800	.8870	.9720	1.0000
X/CW										
.865		.3028								
.879			.2844							
.900		.2276			.2695			-.0848		
.905				.2610						
.919			.2489							
.950					.2378	.2834	.3114			
.953				.2228						
.955			.2242							
.965		.2484								

ALPHA (2) = .062 BETA (2) = .183 MACH = 1.0998 Q = 599.80 P = 708.37 RN/L = 3.1909

SECTION : 1)LEFT WING TOP SURF DEPENDENT VARIABLE CP

2Y/BW	.2350	.2990	.3640	.4270	.5340	.6730	.7800	.8870	.9720	1.0000
X/CW										
.000	-.1737	-.1255	-.0351	.4250	.6121	.5345	.4979	.5130	-.2189	
.010		-.1675	-.0106		.4786	.4903	.4535	.3548		
.020		-.1903		.0000	.3782	.3452	.3335	.3026	-.1483	
.040			.0307	.2369						
.041	-.2278									
.050					.1678	.1081	.0900	.0884		
.069									-.2262	
.080					-.0196					
.081				.1024						
.086			.1196							
.094		-.1127								
.113	-.1896									
.150					-.2316	-.2589	-.2362	-.2229		
.157									-.4380	
.163			.0000							
.177				-.0951						
.229		-.0339								
.246			-.0105							
.247	-.0953									
.250					-.3300	-.3604	-.4192	-.4378		
.274				-.2166						
.345									-.4524	
.362		.0979								
.390			-.1817							
.400					-.4415	-.5112		-.6132		
.402				-.3677						
.418										-.1780
.429	.0606									

AMES 11-073(OA148) -140A/B/C/R ORB LEFT WING TOP (XEBU64)

ALPHA (2) = .062 BETA (2) = .183

SECTION (1)LEFT WING TOP SURF DEPENDENT VARIABLE CP

2Y/BW	.2350	.2990	.3640	.4270	.5340	.6730	.7600	.8870	.9720	1.0000
X/CW										
.497		-.1150								
.503									-.5101	
.547	.0051									
.550					-.0059	-.1167				
.585				.0970						
.600								-.2543		
.633	-.2057									
.637			.1284							
.650							-.1412			
.670									-.2060	
.700		.1432				-.0689				
.723										-.3208
.725					-.0499					
.727	.0974									
.750							.3231	-.0180		
.760				-.1016						
.775					.2940	.1911				
.793	.2612									
.798			-.0667							
.808				.2922						
.834		-.0510								
.839			.2590							
.850					.2427	.2220	.2850			
.857				.2128						
.862									-.0828	
.865		.2066								
.879			.1954							
.900		.1318			.2023			.2124		
.905				.1852						
.919			.1736							
.940					.1952	.2524	.2627			
.953				.1673						
.955			.1625							
.965		.1751								

AMES 11-073(OA148) -140A/B/C/R ORB LEFT WING TOP (XEBU64)

ALPHA (2) = .059 BETA (3) = 4.253 MACH = 1.0998 Q = 599.80 P = 708.37 RN/L = 3.1309

SECTION (1)LEFT WING TOP SURF DEPENDENT VARIABLE CP

2Y/BW	.2350	.2990	.3640	.4270	.5340	.6730	.7800	.8870	.9720	1.0000
X/CW										
.000	-.1941	-.2443	-.0665	.4147	.5881	.4849	.4370	.4313	-.1777	
.010		-.2852	-.0353		.4183	.4120	.3628	.2509		
.020		-.2854		.0000	.3244	.2775	.2425	.1969	-.2119	
.040			.0294	.2176						
.041	-.2925									
.050					.1377	.0552	.0234	-.0013		
.069									-.2768	
.080					-.0345					
.091				.1014						
.086			.1406							
.094		-.1217								
.113	-.2543									
.150					-.2088	-.2655	-.2633	-.2704		
.157									-.4739	
.153			.0000							
.177				-.0731						
.229		-.0164								
.246			.0205							
.247	-.0932									
.250					-.3055	-.3889	-.3907	-.4850		
.274				-.1876						
.345									-.4746	
.362		.1203								
.390			-.1606							
.400					-.3970	-.5025		-.6177		
.402				-.3266						
.418										-.2699
.429	.0769									
.497		-.0871								
.503									-.5208	
.547	.0299									
.550					-.0062	-.1137				
.565				.0725						
.600								-.3498		
.633	-.1741									
.637			.1067							
.650							-.1901			
.670									-.2349	
.700		.1203				-.1163				
.723										-.2744
.725					-.0746					
.727	.0831									
.740							.2527	.2004		
.750				-.1343						
.775					.1900	.0626				

AMES 11-073(OA148) -140A/B/C/R CR8 LEFT WING TOP (XE2U64)

ALPHA (2) = .059 SETA (3) = 4.253

SECTION (1)LEFT WING TOP SURF DEPENDENT VARIABLE CP

2Y/BW	.2350	.2990	.3640	.4270	.5340	.6730	.7800	.8870	.9720	1.0000
X/CW										
.793	.2289									
.798			-.1372							
.809				.1756						
.834		-.1049								
.839			.1572							
.850					.1202	.1012	.2506			
.857				.0916						
.862									.1483	
.865		.1063								
.879			.0738							
.900		.0249			.0961			.2763		
.905				.0589						
.919			.0456							
.950					.1235	.2006	.2256			
.953				.0750						
.955			.0617							
.965		.0769								

ALPHA (3) = 4.021 SETA (1) = -3.865 MACH = 1.0995 Q = 600.25 P = 709.31 RN/L = 3.1949

SECTION (1)LEFT WING TOP SURF DEPENDENT VARIABLE CP

2Y/BW	.2350	.2990	.3640	.4270	.5340	.6730	.7800	.8870	.9720	1.0000
X/CW										
.000	-.0758	-.0818	-.1375	.4642	.7140	.6891	.6695	.6379	.0111	
.010		-.1565	-.1216		.3233	.3979	.3314	.1484		
.020		-.1754		.0000	.2020	.2082	.1630	.0754	-.2573	
.040			-.0655	.0477						
.041	-.1470									
.050					-.0401	-.0654	-.0989	-.1573		
.069									-.3242	
.080					-.2232					
.081				-.1045						
.086			-.0095							
.094		-.2266								
.113	-.1263									
.150					-.3956	-.4524	-.4180	-.4051		
.157									-.5507	
.163			.0000							
.177				-.2634						
.229		-.0849								
.245			-.1442							
.247	-.1726									
.250					-.5042	-.5777	-.5980	-.5794		

AMES 11-073(OA148) -140A/B/C/R ORB LEFT WING TOP (XE8U64)

ALPHA (3) = 4.021 BETA (1) = -3.865

SECTION (1)LEFT WING TOP SURF DEPENDENT VARIABLE CP

BY/BW	.2350	.2990	.3640	.4270	.5340	.6730	.7800	.8870	.9720	1.0000
X/CW										
.274				-.3698						
.345									-.6430	
.352		.0396								
.330			-.3081							
.400					-.5853	-.7233		-.5784		
.402				-.5047						
.418										-.4427
.429	-.0040									
.487		-.2009								
.503									-.6065	
.547	-.0792									
.550					-.2654	-.5186				
.565				-.2039						
.600								-.4276		
.633	-.3113									
.637			-.1219							
.650							-.4725			
.670									-.5794	
.700		-.1496				-.3310				
.723										-.6936
.725					-.0023					
.727	-.3019									
.750							-.3789	-.3299		
.760				.0756						
.775					.1058	-.0673				
.793	.1930									
.799			.0484							
.808				.3298						
.834		-.0028								
.839			.3468							
.850					.2362	.0403	.2735			
.857				.2802						
.862									-.4402	
.865		.3132								
.879			.2755							
.900		.2115			.2299			-.2132		
.905				.2414						
.919			.2308							
.950					.2096	.1951	-.1809			
.953				.1977						
.955			.2068							
.965		.2339								

AMES 11-073(OA148) -140A/B/C/R ORB LEFT WING TOP (XEBU64)

ALPHA (3) = 4.021 BETA (2) = .178 MACH = 1.0995 Q = 600.25 P = 709.31 RN/L = 3.1949

SECTION (1)LEFT WING TOP SURF DEPENDENT VARIABLE CP

2Y/BW	.2350	.2990	.3640	.4270	.5340	.6730	.7800	.8870	.9720	1.0000
X/CW										
.000	-.1139	-.2375	-.2543	.3803	.6327	.6084	.5925	.5555	-.0882	
.010		-.3043	-.1913		.2246	.2953	.2323	.0607		
.020		-.3043		.0000	.1169	.1179	.0792	-.0115	-.3368	
.040			-.1061	.0003						
.041	-.2197									
.050					-.0898	-.1294	-.1616	-.2145		
.069									-.3825	
.080					-.2567					
.081				-.1238						
.085			-.0111							
.094		-.2946								
.113	-.2012									
.150					-.4000	-.4705	-.4468	-.4364		
.157									-.5825	
.163			.0000							
.177				-.2607						
.229		-.0871								
.246			-.1448							
.247	-.2240									
.250					-.4919	-.5797	-.6037	-.5948		
.274				-.3575						
.345									-.6713	
.362		.0330								
.390			-.2996							
.400					-.5506	-.6869		-.6334		
.402				-.4840						
.418										-.6011
.479	.0163									
.497		-.2110								
.503									-.6555	
.547	-.0841									
.550					-.2265	-.5635				
.585				-.1458						
.600								-.4461		
.633	-.3182									
.637			-.1040							
.650							-.4784			
.670									-.6282	
.700		-.0845				-.1450				
.723										-.6413
.725					-.0464					
.727	-.2121									
.750							-.3493	-.3042		
.760				-.0173						
.775					.1688	-.0530				

AMES 11-073(OA148) -140A/B/C/R ORB LEFT WING TOP (XEBU64)

ALPHA (3) = 4.021 BETA (2) = .178

SECTION (1)LEFT WING TOP SURF DEPENDENT VARIABLE CP

2Y/BW	.2350	.2990	.3640	.4270	.5340	.6730	.7800	.8870	.9720	1.0000
X/CW										
.793	.2105									
.798			-.0602							
.808				.2437						
.834		-.0551								
.839			.2471							
.850					.2232	.1136	-.1908			
.857				.2053						
.862									-.4014	
.865		.2292								
879			.1848							
.900		.1285			.1895			-.2346		
.905				.1698						
.919			.1482							
.950					.1685	.1743	.0110			
.953				.1473						
.955			.1439							
.965		.1689								

ALPHA (3) = 4.024 BETA (3) = 4.243 MACH = 1.0995 Q = 600.25 P = 709.31 RN/L = 3.1949

SECTION (1)LEFT WING TOP SURF DEPENDENT VARIABLE CP

2Y/BW	.2350	.2990	.3640	.4270	.5340	.6730	.7800	.8870	.9720	1.0000
X/CW										
.000	-.1591	-.4422	-.3127	.2846	.5634	.5306	.4957	.4319	-.2913	
.010		-.4903	- 1764		.1178	.1785	.0940	-.0798		
.020		-.4486		.0000	.0363	.0160	-.0395	-.1519	-.4932	
.040			-.1044	-.0218						
.041	-.2835									
.050					-.1322	-.1946	-.2494	-.3223		
.069									-.4984	
.080					-.2743					
.081				-.1300						
.066			-.0218							
.094		-.3228								
.113	-.2826									
.150					-.4041	-.4975	-.4972	-.5091		
.157									-.6534	
.163			.0000							
.177				-.2323						
.229		-.0842								
.245			-.1242							
.247	-.2489									
.250					-.4645	-.5999	-.6290	-.6421		

AMES 11-073(OA148) -140A/B/C/R ORB LEFT WING TOP (XEBU64)

ALPHA (3) = 4.024 BETA (3) = 4.243

SECTION (1)LEFT WING TOP SURF DEPENDENT VARIABLE CP

2Y/BW	.2350	.2990	.3640	.4270	.5340	.6730	.7800	.8870	.9720	1.0000
X/CW										
.274				-.3165						
.345									-.6972	
.362		.0430								
.390			-.2623							
.400					-.5389	-.6543		-.6796		
.402				-.4382						
.418										-.8284
.429	.0279									
.497		-.1823								
.503									-.6617	
.547	-.0527									
.550					-.2312	-.5686				
.565				-.1494						
.600								-.5056		
.633	-.2913									
.637			-.0526							
.650							-.4922			
.670									-.5785	
.700		-.0385				-.1744				
.723										-.6730
.725					-.1211					
.727	-.1756									
.750							-.3070	-.3861		
.760				-.1574						
.775					.1331	.0006				
.793	.1794									
.798			-.1350							
.808				.1013						
.834		-.1039								
.839			.1159							
.850					.1152	.0578	.0193			
.857				.0576						
.862									-.3218	
.865		.0844								
.879			.0525							
.900		.0003			.0773			-.3050		
.905				.0236						
.919			.0092							
.950					.0914	.1472	.2350			
.953				.0320						
.955			.0288							
.965		.0382								

AMES 11-073(OA148) -140A/B/C/R ORB LEFT WING TOP (XEBU64)

ALPHA (4) = 7.977 BETA (1) = -3.859 MACH = 1.0995 Q = 600.25 P = 709.31 RN/L = 3.1954

SECTION (1)LEFT WING TOP SURF DEPENDENT VARIABLE CP

2Y/BW	.2330	.2990	.3640	.4270	.5340	.6730	.7800	.8870	.9720	1.0000
X/CW										
.000	-.0327	-.2244	-.5257	.2379	.6232	.6259	.5976	.4995	-.2750	
.010		-.3283	-.5246		-.0382	.0820	-.0175	-.2157		
.020		-.3048		.0000	-.1246	-.1027	-.1580	-.2999	-.6146	
.040			-.3806	-.2049						
.041	-.1554									
.050					-.3049	-.3254	-.3826	-.4779		
.069									-.5742	
.080					-.4548					
.081				-.3096						
.086			-.2789							
.094		-.2827								
.113	-.1252									
.150					-.6552	-.6512	-.6431	-.6124		
.157									-.5320	
.163			.0000							
.177				-.4233						
.229		-.2441								
.246			-.2384							
.247	-.1841									
.250					-.6980	-.7575	-.6607	-.5719		
.274				-.4800						
.345									-.4762	
.362		-.0147								
.390			-.3811							
.400					-.7006	-.7098		-.5294		
.402				-.5828						
.418										-.4698
.429	-.0849									
.497		-.2858								
.503									-.4490	
.547	-.1120									
.550					-.5207	-.6203				
.565				-.3660						
.600								-.4555		
.633	-.3990									
.637			-.3285							
.650							-.4765			
.670									-.3894	
.700		-.5048				-.5277				
.723										-.3439
.725					-.2311					
.727	-.4409									
.750							-.4355	-.4043		
.760				-.0509						
.775					-.1513	-.3969				

AMES 11-073(OA148) -140A/B/C/R ORB LEFT WING TOP (XE8U64)

ALPHA (4) = 7.977 BETA (1) = -3.859

SECTION (1)LEFT WING TOP SURF DEPENDENT VARIABLE CP

2Y/BW	.2350	.2990	.3640	.4270	.5340	.6730	.7800	.8870	.9720	1.0000
X/CW										
.793	.1215									
.798			-.0649							
.808				.1927						
.834		.0361								
.839			.2191							
.850					.0369	-.3480	-.4087			
.857				.2060						
.862									-.3341	
.865		.3136								
.879			.1926							
.900		.1919			.1195			-.3593		
.905				.1863						
.919			.1983							
.950					.1719	-.1478	-.3713			
.953				.1559						
.955			.2080							
.965		.2103								

ALPHA (4) = 7.981 BETA (2) = .181 MACH = 1.0995 Q = 600.25 P = 709.31 RN/L = 3.1954

SECTION (1)LEFT WING TOP SURF DEPENDENT VARIABLE CP

2Y/BW	.2350	.2990	.3640	.4270	.5340	.6730	.7800	.8870	.9720	1.0000
X/CW										
.000	-.0987	-.4592	-.6893	.0540	.4963	.5008	.4706	.3755	-.4811	
.010		-.5212	-.5964		-.1536	-.0524	-.1544	-.3453		
.020		-.4857		.0000	-.2395	-.2092	-.2727	-.4062	-.6201	
.040			-.4688	-.2371						
.041	-.2167									
.050					-.3618	-.4052	-.4648	-.5656		
.069									-.5620	
.090					-.4913					
.081				-.3067						
.086			-.3525							
.094		-.3639								
.113	-.2196									
.150					-.6604	-.6795	-.6841	-.6549		
.157									-.5509	
.163			.0000							
.177				-.3806						
.229		-.2268								
.245			-.2788							
.247	-.2592									
.250					-.6660	-.7884	-.7126	-.6213		

AMES 11-073(OA148) -140A/B/C/R ORB LEFT WING TOP (XE8U64)

ALPHA (4) = 7.981 BETA (2) = .181

SECTION (1)LEFT WING TOP SURF DEPENDENT VARIABLE CP

2Y/BW	.2350	.2990	.3640	.4270	.5340	.6730	.7800	.8870	.9720	1.0000
X/CW										
.274				-.4444						
.345									-.5210	
.362		.0081								
.390			-.4131							
.400					-.6566	-.7782		-.5660		
.402				-.5576						
.418										-.5236
.429	-.0547									
.497		-.3011								
.503									-.4977	
.547	-.1177									
.550					-.3759	-.6627				
.565				-.4245						
.600								-.4917		
.633	-.4058									
.637			-.3001							
.650							-.5428			
.670									-.4397	
.700		-.4035				-.5241				
.723										-.4011
.725					-.1604					
.727	-.4162									
.750							-.5003	-.4451		
.760				-.0701						
.775					-.0540	-.3124				
.793	.0986									
.798			-.1253							
.808				.1274						
.834		-.0535								
.839			.1994							
.850					.0558	-.1478	-.4712			
.857				.0980						
.862									-.3830	
.865		.2043								
.879			.1461							
.900		.1245			.0836			-.4081		
.905				.0806						
.919			.1324							
.950					.1125	.0539	-.4183			
.953				.0625						
.955			.1369							
.965		.1552								

AMES 11-073(OA148) -140A/B/C/R ORB LEFT WING TOP (XE8U64)

ALPHA (4) = 7.900 BETA (3) = 4.237 MACH = 1.0995 Q = 600.25 P = 709.31 RN/L = 3.1954

SECTION (1)LEFT WING TOP SURF DEPENDENT VARIABLE CP

2Y/BW	.2350	.2990	.3640	.4270	.5340	.6730	.7800	.8870	.9720	1.0000
X/CW										
.000	-.1589	-.6787	-.4522	-.0347	.3728	.3753	.3335	.2248	-.6827	
.010		-.6045	-.4178		-.2615	-.1843	-.3019	-.4820		
.020		-.5800		.0000	-.3342	-.3167	-.3981	-.5397	-.6948	
.040			-.3889	-.1193						
.041	-.2907									
.050					-.4117	-.4845	-.5522	-.6627		
.069									-.6293	
.080					-.5020					
.081				-.1724						
.086			-.2601							
.094		-.6448								
.113	-.3087									
.150					-.5916	-.7132	-.7346	-.7676		
.157									-.6248	
.163			.0000							
.177				-.2838						
.229		-.1592								
.246			-.2394							
.247	-.3217									
.250					-.5791	-.8009	-.7565	-.7448		
.274				-.3948						
.345									-.6243	
.362		.0737								
.390			-.3337							
.400					-.6006	-.7836		-.7619		
.402				-.5166						
.418										-.6198
.429	-.0322									
.497		-.2557								
.503									-.6172	
.547	-.0959									
.550					-.4374	-.6654				
.565				-.3075						
.600								-.6284		
.633	-.3864									
.637			-.1912							
.650							-.6351			
.670									-.5671	
.700		-.2825				-.4669				
.723										-.5151
.725					-.1295					
.727	-.3776									
.750							-.5403	-.5404		
.760				-.1938						
.775					.0737	-.1727				

AMES 11-073(OA148) -140A/B/C/R ORB LEFT WING TOP (XE8U64)

ALPHA (4) = 7.900 BETA (3) = 4.237

SECTION (1)LEFT WING TOP SURF DEPENDENT VARIABLE CP

2Y/BW	.2350	.2990	.3640	.4270	.5340	.6730	.7800	.8870	.9720	1.0000
X/CW										
.793	.1111									
.798			-.1549							
.808				.0435						
.834		-.1440								
.839			.0839							
.850					.0346	-.1097	-.5085			
.857				-.0282						
.862									-.5097	
.865		.0293								
.879			.0344							
.900		.0016			-.0265			-.4773		
.905				-.0426						
.919			-.0083							
.950					-.0067	.0040	-.3948			
.953				-.0296						
.955			-.0043							
.965		.0107								

ALPHA (5) = 11.919 BETA (1) = -3.844 MACH = 1.0980 Q = 599.84 P = 710.72 RN/L = 3.1951

SECTION (1)LEFT WING TOP SURF DEPENDENT VARIABLE CP

2Y/BW	.2350	.2990	.3640	.4270	.5340	.6730	.7800	.8870	.9720	1.0000
X/CW										
.000	-.0470	-.4526	-.6492	-.1473	.3704	.4013	.3733	.2568	-.5964	
.010		-.5147	-.5995		-.4340	-.2964	-.3992	-.5701		
.020		-.5009		.0000	-.5494	-.4559	-.5209	-.6267	-.6263	
.040			-.5056	-.6075						
.041	-.1492									
.050					-.6853	-.6318	-.6810	-.7568		
.069									-.5499	
.080					-.7838					
.081				-.6953						
.086			-.4055							
.094		-.3711								
.113	-.1305									
.150					-.8029	-.7308	-.7107	-.7426		
.157									-.5393	
.163			.0000							
.177				-.5755						
.229		-.3152								
.245			-.3709							
.247	-.1932									
.250					-.7911	-.7358	-.7233	-.7478		

AMES 11-073(OA148) -140A/B/C/R ORB LEFT WING TOP (XEBU64)

ALPHA (5) = 11.919 BETA (1) = -3.844

SECTION (1)LEFT WING TOP SURF DEPENDENT VARIABLE CP

2Y/BW	.2350	.2990	.3640	.4270	.5340	.6730	.7800	.8870	.9720	1.0000
X/CW										
.274				-.4531						
.345									-.5379	
.362		-.2321								
.390			-.4492							
.400					-.7004	-.6931		-.5663		
.402				-.5841						
.418										-.5297
.429	-.2628									
.497		-.3756								
.503									-.5333	
.547	-.1326									
.550					-.6660	-.6705				
.565				-.4283						
.600								-.5477		
.633	-.4500									
.637			-.3711							
.650							-.5838			
.670									-.4978	
.700		-.5502				-.6268				
.723										-.4859
.725					-.4575					
.727	-.5007									
.750							-.5499	-.5417		
.760				-.2616						
.775					-.4399	-.5625				
.793	.0600									
.798			-.2613							
.808				-.2235						
.834		-.0900								
.839			.0065							
.850					-.3167	-.5127	-.5227			
.857				-.2252						
.862									-.4437	
.865		.0600								
.879			-.0257							
.900		.0543			-.2691			-.5251		
.905				-.2088						
.919			.0270							
.950					-.1664	-.3719	-.4760			
.953				-.1201						
.955			.0867							
.965		.0862								

AMES 11-073(OA148) -140A/B/C/R ORB LEFT WING TOP (XEBUS4)

ALPHA (5) = 11.930 BETA (2) = .189 MACH = 1.0980 Q = 599.84 P = 710.72 RN/L = 3.1951

SECTION (1)LEFT WING TOP SURF DEPENDENT VARIABLE CP

2Y/BW	.2350	.2990	.3640	.4270	.5340	.6730	.7800	.8870	.9720	1.0000
X/CW										
.000	-.1324	-.6330	-.6140	-.3869	.2023	.2454	.2186	.1046	-.7154	
.010		-.5449	-.5998		-.5808	-.4206	-.5121	-.6833		
.020		-.5217		.0000	-.6601	-.5784	-.6391	-.7328	-.6222	
.040			-.5807	-.3779						
.041	-.2380									
.050					-.7124	-.7139	-.7624	-.8349		
.069									-.6080	
.080					-.7093					
.081				-.3651						
.085			-.5326							
.094		-.5999								
.113	-.2577									
.150					-.6914	-.8052	-.7845	-.8406		
.157									-.5952	
.163			.0000							
.177				-.3571						
.229		-.6873								
.246			-.5039							
.247	-.2610									
.250					-.6726	-.8033	-.7382	-.6724		
.274				-.5230						
.345									-.5878	
.362		-.1854								
.390			-.6028							
.400					-.7225	-.7452		-.6153		
.402				-.6334						
.410										-.5818
.429	-.2513									
.497		-.3364								
.503									-.5867	
.547	-.1866									
.550					-.6408	-.7077				
.585				-.5915						
.600								-.5999		
.633	-.4979									
.637			-.6424							
.650							-.6534			
.670									-.5537	
.700		-.3409				-.6441				
.723										-.5269
.725					-.3373					
.727	-.5201									
.750							-.6285	-.5916		
.750				-.2444						
.775					-.2667	-.5288				

AMES 11-073(OA148) -140A/B/C/R ORB LEFT WING TOP (XEBU64)

ALPHA (5) = 11.930 BETA (2) = .189

SECTION (1)LEFT WING TOP SURF DEPENDENT VARIABLE CP

2Y/BW	.2350	.2990	.3640	.4270	.5340	.6730	.7800	.8870	.9720	1.0000
X/CW										
.793	-.0430									
.799			-.1828							
.809				-.1534						
.834		-.1205								
.839			.1034							
.850					-.2067	-.4775	-.5863			
.857				-.2027						
.862									-.4971	
.865		.0513								
.879			.0459							
.900		.0560			-.1857			-.5748		
.905				-.2285						
.919			-.0275							
.950					-.0781	-.2264	-.5449			
.953				-.1940						
.955			-.0197							
.965		.0331								

ALPHA (5) = 11.925 BETA (3) = 4.249 MACH = 1.0980 Q = 599.84 P = 710.72 RN/L = 3.1951

SECTION (1)LEFT WING TOP SURF DEPENDENT VARIABLE CP

2Y/BW	.2350	.2990	.3640	.4270	5340	.6730	.7800	.8870	.9720	1.0000
X/CW										
.000	-.2140	-.6755	-.6663	-.4086	.0888	.0923	.0592	-.0682	-.7540	
.010		-.6496	-.6589		-.6391	-.5353	-.6340	-.7808		
.020		-.6451		.0000	-.7033	-.6707	-.7313	-.8215	-.6847	
.040			-.6285	-.1464						
.041	-.3320									
.050					-.7390	-.7828	-.8417	-.7438		
.059									-.6627	
.080					-.7282					
.081				-.2558						
.086			-.5350							
.094		-.7150								
.113	-.3249									
.150					-.7106	-.8767	-.8781	-.7171		
.157									-.6492	
.163			.0000							
.177				-.4679						
.229		-.8387								
.245			-.4465							
.247	-.3764									
.250					-.6290	-.8686	-.8687	-.7270		

AMES 11-073(OA148) -140A/B/C/R ORB LEFT WING TOP (XEBU64)

ALPHA (5) = 11.925 BETA (3) = 4.249

SECTION (1)LEFT WING TOP SURF DEPENDENT VARIABLE CP

2Y/BW	.2350	.2990	.3640	.4270	.5340	.6730	.7800	.8870	.9720	1.0000
X/CW										
.274				-.4416						
.345									-.6390	
.362		-.0316								
.390			-.4239							
.400					-.6381	-.7923		-.7166		
.402				-.5778						
.418										-.6304
.429	-.2048									
.497		-.3157								
.503									-.6269	
.547	-.1051									
.550					-.5100	-.7406				
.555				-.6508						
.600								-.6917		
.633	-.4738									
.637			-.4699							
.650							-.7322			
.670									-.5990	
.700		-.4461				-.5918				
.723										-.5788
.725					-.2859					
.727	-.4760									
.750							-.6889	-.6576		
.760				-.2665						
.775					-.2236	-.3955				
.793	-.0196									
.798			-.2007							
.809				-.2050						
.834		-.1758								
.839			-.0586							
.850					-.1599	-.3578	-.6325			
.857				-.1309						
.862									-.5689	
.865		-.0525								
.879			-.0719							
.900		-.0547			-.2168			-.6283		
.905				-.1414						
.919			.0094							
.950					-.2384	-.1316	-.5545			
.953				-.1677						
.955			-.0416							
.905		-.0181								

AMES 11-073(OA148) -140A/B/C/R ORB LEFT WING TOP (XESJ85) (05 AUG 75)

REFERENCE DATA

SREF = 2690.0000 SQ.FT. XMRP = 1076.6800 IN. XO
LREF = 474.8000 IN. YMRP = .0000 IN. YO
BREF = 936.0583 IN. ZMRP = 375.0000 IN. ZO
SCALE = .0300

PARAMETRIC DATA

RUDDER = 5.000 SPDBRK = 55.000
BDFLAP = 16.300 L-ELVN = -4.000
R-ELVN = -4.000 MACH = .900

ALPHA (1) = -3.965 BETA (1) = -3.837 MACH = .90037 Q = 600.12 P = 1057.6 RN/L = 3.5768

SECTION (1)LEFT WING TOP SURF DEPENDENT VARIABLE CP

2Y/BW	.2350	.2990	.3640	.4270	.5340	.6730	.7800	.8870	.9720	1.0000
X/CW										
.000	-.4406	-.0390	-.0970	.1508	.4135	.3208	.2560	.2675	-1.0720	
.010		.0391	.0588		.6209	.5845	.5430	.4500		
.020		.0495		.0000	.5487	.4989	.4670	.4067	-.3823	
.040			.1399	.3928						
.041	-.0470									
.050					.3334	.2859	.2579	.2058		
.059									-.4529	
.080					.1422					
.081				.2700						
.095			.2924							
.094		.0582								
.113	.0447									
.150					-.0846	-.1169	-.1147	-.1754		
.157									-.5335	
.163			.0000							
.177				.0015						
.229		.1693								
.246			.0839							
.247	.0797									
.250					-.2718	-.3181	-.3591	-.4796		
.274				-.1406						
.345									-.0106	
.362		.1536								
.390			-.1203							
.400					-.1764	-.2954		-.5779		
.402				-.1636						
.418										-.5518
.429	.1681									
.497		-.0731								
.503									-.1106	
.547	.0319									
.550					-.0811	-.1765				
.565				.0147						
.600								-.0752		
.623	-.0889									
.637			.0690							
.650							-.0348			
.673									.0265	

AMES 11-073(OA148) -140A/B/C/R ORB LEFT WING TOP (XEBU65)

ALPHA (1) = -3.965 BETA (1) = -3.837

SECTION (1)LEFT WING TOP SURF DEPENDENT VARIABLE CP

2Y/BW	.2350	.2990	.3640	.4270	.5340	.6730	.7800	.8870	.9720	1.0000
X/CW										
.700		.0978				.0055				
.723										-1.0364
.725					.0320					
.727	.0668									
.750							.3303	.2058		
.760				.0058						
.775					.3449	.2167				
.793	.2258									
.798			.0075							
.803				.2953						
.834		.0166								
.833			.2747							
.850					.2046	.1511	.1844			
.857				.1823						
.862									.0442	
.865		.2612								
.879			.1776							
.900		.1249			.1279			.1410		
.905				.1242						
.919			.1077							
.950					.0793	.1448	.1272			
.953				.0633						
.955			.0575							
.963		.0995								

ALPHA (1) = -3.963 BETA (2) = .195 MACH = .90037 Q = 600.12 P = 1057.6 PN/L = 3.5758

SECTION (1)LEFT WING TOP SURF DEPENDENT VARIABLE CP

2Y/BW	.2350	.2990	.3640	.4270	.5340	.6730	.7800	.8870	.9720	1.0000
X/CW										
.000	-.4535	.0002	-.0275	.1619	.1356	.2311	.1514	.1532	-.7514	
.010		.0375	.0700		.5510	.5039	.4631	.3836		
.020		.0328		.0000	.4885	.4344	.4037	.3432	-.4498	
.040			.1535	.3340						
.041	-.0953									
.050					.2935	.2468	.2209	.1668		
.059									-.5020	
.060					.1228					
.061				.2310						
.069			.2314							
.094		.0335								
.113	.0287									
.130					-.0608	-.1181	-.1133	-.1987		

AMES 11-073(OA148) -140A/B/C/R ORB LEFT WING TOP (XE8U65)

ALPHA (1) = -3.963 BETA (2) = .195

SECTION (1)LEFT WING TOP SURF DEPENDENT VARIABLE CP

2Y/BW	.2350	.2990	.3640	.4270	.5340	.6730	.7800	.8870	.9720	1.0000
X/CW										
.157									-.5599	
.163			.0000							
.177				-.0040						
.229		.1379								
.246			.0686							
.247	.0640									
.250					-.2550	-.2969	-.3483	-.4742		
.274				-.1373						
.345									.0128	
.362		.1346								
.390			-.1188							
.400					-.1949	-.3000		-.5727		
.402				-.1699						
.418										-.4023
.429	.1428									
.497		-.0781								
.503									-.1272	
.547	.0176									
.550					-.1488	-.2685				
.565				-.0419						
.600								-.0839		
.633	-.1010									
.637			.0098							
.650							-.0686			
.670									-.0050	
.700		.0456				-.0395				
.723										-1.0167
.725					-.0240					
.727	.0232									
.75[illegible]							.3169	.1934		
.760				-.0682						
.775					.3106	.1320				
.793	.1639									
.798			-.0642							
.808				.2476						
.834		-.0609								
.839			.2197							
.850					.1687	.1142	.1737			
.857				.1411						
.862									.0331	
.865		.2081								
.879			.1237							
.900		.0676			.0925			.1237		
.905				.0868						
.919			.0635							

DATE 11 FEB 76 TABULATED PRESSURE DATA - OA148 (AMES 11-073-1)

AMES 11-073(OA148) -140A/B/C/? ORB LEFT WING TOP (XEBU65)

ALPHA (1) = -3.963 BETA (2) = .195

SECTION (1)LEFT WING TOP SURF DEPENDENT VARIABLE CP

2Y/BW	.2350	.2990	.3640	.4270	.5340	.6730	.7800	.8870	.9720	1.0000
X/CW										
.950					.0482	.1239	.1125			
.953				.0298						
.955			.0283							
.965		.0575								

ALPHA (1) = -3.957 BETA (3) = 4.274 MACH = .90037 Q = 600.12 P = 1057.6 RN/L = 3.5788

SECTION (1)LEFT WING TOP SURF DEPENDENT VARIABLE CP

2Y/BW	.2350	.2990	.3640	.4270	.5340	.6730	.7800	.8870	.9720	1.0000
X/CW										
.000	-.4881	.0222	.0296	.1820	.3065	.1641	.0724	.0776	-.6711	
.010		.0380	.0829		.4772	.4298	.3856	.3172		
.020		.0278		.0000	.4256	.3692	.3367	.2778	-.5018	
.040			.1434	.2819						
.041	-.1113									
.050					.2474	.1991	.1744	.1248		
.069									-.5367	
.080					.0888					
.081				.1926						
.086			.2223							
.094		.0238								
.113	.0040									
.150					-.0840	-.1251	-.1218	-.2057		
.157									-.5854	
.163			.0000							
.177				-.0085						
.229		.1226								
.246			.0489							
.247	.0524									
.250					-.2474	-.2910	-.3430	-.4760		
.274				-.1354						
.345									-.1409	
.362		.1200								
.390			-.1124							
.400					-.2058	-.3130		-.5843		
.402				-.1864						
.418										-.3328
.429	.1254									
.497		-.0853								
.503									-.1040	
.547	.0066									
.550					-.2072	-.3520				
.565				-.0973						

AMES 11-073(OA148) -140A/B/C/D CRB LEFT WING TOP (XE8U65)

ALPHA (1) = -3.957 BETA (3) = 4.274

SECTION (1)LEFT WING TOP SURF DEPENDENT VARIABLE CP

2Y/BW	.2350	.2990	.3640	.4270	.5340	.6730	.7800	.8870	.9720	1.0000
X/CW										
.600								-.0879		
.633	-.1132									
.637			-.0513							
.650							-.0989			
.670									-.0100	
.700		-.0081				-.0700				
.723										-.8744
.725					-.0859					
.727	-.0256									
.750							.3062	.2074		
.760				-.1373						
.775					.2767	.1522				
.793	.0994									
.798			-.1358							
.808				.1983						
.834		-.1470								
.839			.1673							
.850					.1366	.0841	.1676			
.857				.1027						
.862									.0264	
.865		.1358								
.879			.0760							
.900		.0179			.0659			.1241		
.905				.0504						
.919			.0282							
.950					.0324	.1068	.1087			
.953				.0055						
.955			-.0009							
.965		.0339								

ALPHA (2) = .052 BETA (1) = -3.869 MACH = .90007 Q = 599.62 P = 1057.3 RN/L = 3.5759

SECTION (1)LEFT WING TOP SURF DEPENDENT VARIABLE CP

2Y/BW	.2350	.2990	.3640	.4270	.5340	.6730	.7800	.8870	.9720	1.0000
X/CW										
.000	-.3648	.0507	.1044	.3759	.5494	.4855	.4465	.4547	-.3628	
.010		.0485	.1512		.4629	.4713	.4245	.2759		
.020		.0284		.0000	.3411	.3089	.2720	.2081	-.2790	
.040			.1902	.2058						
.041	-.1464									
.050					.0786	.0204	-.0024	-.0489		
.069									-.3628	
.080					-.1403					

AMES 11-073(OA148) -140A/B/C/R ORB LEFT WING TOP (XESUB5)

ALPHA (2) = .052 BETA (1) = -3.869

SECTION (1)LEFT WING TOP SURF DEPENDENT VARIABLE CP

2Y/BW	.2350	.2990	.3640	.4270	.5340	.6730	.7800	.8870	.9720	1.0000
X/CW										
.081				.0485						
.086			.2253							
.094		.0107								
.113	-.0269									
.150					-.3646	-.4170	-.4134	-.4320		
.157									-.6748	
.163			.0000							
.177				-.2430						
.229		.1061								
.246			-.0880							
.247	.0314									
.250					-.4870	-.6165	-.6540	-.6626		
.274				-.3812						
.345									-.4131	
.362		.0407								
.390			-.3262							
.400					-.2798	-.3727		-.8525		
.402				-.3379						
.418										-.2837
.429	.0978									
.497		-.2414								
.503									-.1965	
.547	-.1019									
.550					-.1131	-.1635				
.565				-.0308						
.600								-.0304		
.633	-.2723									
.637			.0296							
.650							-.0017			
.670									-.0621	
.700		.0414				.0188				
.723										-.2731
.725					.0427					
.727	.0094									
.750							.3068	.1781		
.760				.0307						
.775					.3184	.2081				
.793	.1865									
.798			.0289							
.808				.2820						
.834		.0291								
.839			.2654							
.850					.2035	.1648	.1727			
.857				.1506						
.862									-.0005	

AMES 11-073(OA148) -140A/B/C/R ORB LEFT WING TOP (XEBU65)

ALPHA (2) = .052 BETA (1) = -3.869

SECTION (1)LEFT WING TOP SURF DEPENDENT VARIABLE CP

2Y/BW	.2350	.2990	.3640	.4270	.5340	.6730	.7800	.8870	.9720	1.0000
X/CW										
.865		.2443								
.879			.1775							
.900		.1309			.1278			.1207		
.905				.1263						
.919			.1140							
.950					.0690	.1411	.1110			
.953				.0587						
.955			.0700							
.965		.1079								

ALPHA (2) = .054 BETA (2) = .179 MACH = .90007 Q = 599.62 P = 1057.3 RN/L = 3.5759

SECTION (1)LEFT WING TOP SURF DEPENDEN VARIABLE CP

2Y/BW	.2350	.2990	.3640	.4270	.53	.6730	.7800	.8670	.9720	1.0000
X/CW										
.000	-.4026	.0160	.0950	.3506	.4960	.4121	.3730	.3707	-.3619	
.010		.0020	.1229		.3766	.3857	.3357	.2072		
.020		-.0112		.0000	.2644	.2289	.2035	.1349	-.3481	
.040			.1534	.1458						
.041	-.1997									
.050					.0243	-.0299	-.0558	-.0955		
.069									-.4314	
.080					-.1695					
.081				.0068						
.086			.1808							
.094		-.0122								
.113	-.0348									
.150					-.3624	-.4033	-.4200	-.4539		
.157									-.7119	
.163			.0000							
.177				-.2368						
.229		.0837								
.246			-.1048							
.247	.0148									
.250					-.4792	-.6033	-.6559	-.6866		
.274				-.3558						
.345									-.1537	
.362		.0221								
.390			-.3142							
.400					-.2990	-.4057		-.8612		
.402				-.3517						
.419										-.3147
.429	.0751									

AMES 11-073(OA148) -140A/B/C/R ORB LEFT WING TOP (XE8U65)

ALPHA (2) = .054 BETA (2) = .179

SECTION (1)LEFT WING TOP SURF DEPENDENT VARIABLE CP

2Y/BW	.2370	.2990	.3640	.4270	.5340	.6730	.7800	.8870	.9720	1.0000
X/CW										
.497		-.2417								
.503									-.1651	
.547	-.1193									
.550					-.1381	-.3045				
.565				-.0937						
.610								-.0292		
.633	-.2744									
.637			-.0355							
.650							-.0295			
.670									-.0456	
.700		-.0041				-.0152				
.723										-.2882
.725					-.0137					
.727	-.0392									
.750							.3054	.1777		
.760				-.0365						
.775					.2825	.1763				
.795	.1194									
.799			-.0331							
.806				.2340						
.834		-.0368								
.839			.2078							
.850					.1694	.1291	.1635			
.857				.1401						
.862									.0185	
.865		.1766								
.879			.1284							
.900		.0730			.0971			.1162		
.905				.0880						
.919			.0711							
.950					.0499	.1180	.1015			
.953				.0295						
.955			.0323							
.965		.0695								

AMES 11-073(OA148) -140A/B/C/R ORB LEFT WING TOP (XEBU65)

ALPHA (2) = .050 BETA (3) = 4.252 MACH = .90007 Q = 599.62 P = 1057.3 RN/L = 3.5759

SECTION (1)LEFT WING TOP SURF DEPENDENT VARIABLE CP

2Y/BW	.2350	.2990	.3640	.4270	.5340	.6730	.7800	.8870	.9720	1.0000
X/CW										
.000	-.4445	-.0324	.0556	.3133	.4519	.3648	.3194	.3060	-.3354	
.010		-.0450	.0793		.2905	.2965	.2480	.1112		
.020		-.0461		.0000	.1906	.1476	.1180	.0489	-.3985	
.040			.1195	.0883						
.041	-.3522									
.050					-.0313	-.0866	-.1151	-.1687		
.069									-.4848	
.080					-.2016					
.081				-.0221						
.086			.1475							
.094		-.0229								
.113	-.0456									
.150					-.3690	-.4216	-.4344	-.4832		
.157									-.7463	
.163			.0000							
.177				-.2326						
.229		.0698								
.246			-.1148							
.247	.0061									
.250					-.4844	-.5952	-.6512	-.7067		
.274				-.2990						
.345									-.4449	
.362		.0124								
.390			-.2741							
.400					-.3067	-.4330		-.7678		
.402				-.3584						
.418										-.4745
.429	.0619									
.497		-.2384								
.503									-.1367	
.547	-.1204									
.550					-.2702	-.4342				
.565				-.1523						
.600								-.0358		
.633	-.2582									
.637			-.0985							
.650							-.0805			
.670									-.0262	
.700		-.0627				-.0471				
.723										-.2608
.725					-.0807					
.727	-.0922									
.750							.3104	.1979		
.760				-.1026						
.775					.2414	.1405				

AMES 11-073(OA148) -140A/B/C/R ORB LEFT WING TOP (XEBU65)

ALPHA (2) = .050 BETA (3) = 4.252

SECTION (1)LEFT WING TOP SURF DEPENDENT VARIABLE CP

2Y/BW	.2350	.2990	.3640	.4270	.5340	.6730	.7800	.8870	.9720	1.0000
X/CW										
.793	.0487									
.798			-.1137							
.808				.1864						
.834		-.1412								
.839			.1420							
.850					.1372	.1003	.1603			
.857				.0978						
.862									.0316	
.865		.0907								
.879			.0798							
.900		.0074			.0683			.1240		
.905				.0524						
.919			.0333							
.950					.0347	.1060	.1000			
.953				.0038						
.955			-.0018							
.965		.0312								

ALPHA (3) = 4.021 BETA (1) = -3.873 MACH = .89817 Q = 598.16 P = 1059.3 RN/L = 3.5705

SECTION (1)LEFT WING TOP SURF DEPENDENT VARIABLE CP

2Y/BW	.2350	.2990	.3640	.4270	.5340	.6730	.7800	.8870	.9720	1.0000
X/CW										
.000	-.2934	-.0374	.0534	.4082	.6094	.5735	.5489	.4896	-.1954	
.010		-.0901	.0679		.1696	.2075	.1094	-.1312		
.020		-.0912		.0000	.0344	-.0112	-.0793	-.2117	-.5373	
.040			.0996	-.0440						
.041	-.1834									
.050					-.2447	-.3255	-.3923	-.4835		
.069									-.6335	
.080					-.4679					
.081				-.2205						
.086			.0996							
.094		-.0564								
.113	-.1023									
.150					-.7014	-.7318	-.7301	-.7321		
.157									-.8685	
.153			.0000							
.177				-.4686						
.229		.0506								
.245			-.2682							
.247	-.0746									
.250					-.7579	-.9243	-.9663	-.7749		

AMES 11-073(OA148) -140A/B/C/R ORB LEFT WING TOP (XE8U65)

ALPHA (3) = 4.021 BETA (1) = -3.873

SECTION (1)LEFT WING TOP SURF DEPENDENT VARIABLE CP

2Y/BW	.2350	.2990	.3640	.4270	.5340	.6730	.7900	.8870	.9720	1.0000
X/CW										
.274				-.5990						
.345									-.5487	
.362		-.0671								
.390			-.5421							
.400					-.7064	-.9082		-.5610		
.402				-.7102						
.418										-.7543
.429	.0414									
.497		-.4252								
.503									-.3591	
.547	-.2130									
.550					-.1243	-.2192				
.565				-.0784						
.600								-.4097		
.633	-.5058									
.637			-.0260							
.650							-.3344			
.670									-.2880	
.700		-.0386				-.0364				
.723										-.4831
.725					.0419					
.727	-.0833									
.750							-.1234	-.2489		
.760				.0629						
.775					.1971	.1230				
.793	.1896									
.798			.0564							
.808				.2403						
.834		.0420								
.839			.2490							
.850					.1626	.1075	.0368			
.857				.1773						
.862									-.1548	
.865		.2341								
.879			.1822							
.900		.1307			.1130			-.0899		
.905				.1218						
.919			.1211							
.950					.0702	.1315	.1036			
.953				.0667						
.955			.0782							
.965		.1215								

AMES 11-073(OA148) -140A/B/C/R CRB LEFT WING TOP (XEBU65)

ALPHA (3) = 4.021 BETA (2) = .183 MACH = .89817 Q = 598.16 P = 1059.3 RN/L = 3.5705

SECTION (1)LEFT WING TOP SURF DEPENDENT VARIABLE CP

2Y/BW	.2350	.2990	.3640	.4270	.5340	.6730	.7800	.8870	.9723	1.0000
X/CW										
.000	-.3621	-.1476	-.0582	.3130	.5230	.4806	.4535	.3828	-.3266	
.010		-.1827	-.0257		.0579	.0924	-.0056	-.2264		
.020		-.1557		.0000	-.0648	-.1114	-.1857	-.3104	-.6349	
.040			.0400	-.1107						
.041	-.3875									
.050					-.3059	-.4043	-.4621	-.5543		
.069									-.7054	
.080					-.5073					
.081				-.2681						
.086			.0535							
.094		-.0785								
.113	-.1103									
.150					-.7086	-.7593	-.7631	-.7726		
.157									-.8844	
.163			.0000							
.177				-.4850						
.229		.0273								
.246			-.2855							
.247	-.0332									
.250					-.7470	-.8958	-.9729	-.8148		
.274				-.5895						
.345									-.5331	
.362		-.0866								
.390			-.5344							
.400					-.6644	-.9179		-.5918		
.402				-.6783						
.418										-.9244
.429	.0195									
.497		-.4262								
.503									-.3577	
.547	-.2326									
.550					-.1846	-.1387				
.565				-.1261						
.600								-.4148		
.633	-.5022									
.637			-.0861							
.650							-.2679			
.670									-.2155	
.700		-.0795				-.0643				
.723										-.4250
.725					-.0092					
.727	-.1137									
.750							-.0291	-.2032		
.760				.0113						
.775					.1849	.0993				

AMES 11-073(OA148) -140A/B/C/R ORB LEFT WING TOP (XEBU65)

ALPHA (3) = 4.021 BETA (2) = .183

SECTION (1)LEFT WING TOP SURF DEPENDENT VARIABLE CP

2Y/BW	.2350	.2990	.3640	.4270	.5340	.6730	.7800	.8870	.9720	1.0000
X/CW										
.793	.1325									
.798			-.0119							
.808				.1773						
.834		-.0453								
.839			.1972							
.850					.1425	.1003	.1027			
.857				.1300						
.862									-.0950	
.865		.1505								
.879			.1301							
.900		.0717			.0902			-.0746		
.905				.0792						
.919			.0808							
.950					.0438	.1019	.1239			
.953				.0282						
.955			.0362							
.965		.0785								

ALPHA (3) = 4.023 BETA (3) = 4.246 MACH = .89817 Q = 598.16 P = 1059.3 RN/L = 3.5705

SECTION (1)LEFT WING TOP SURF DEPENDENT VARIABLE CP

2Y/BW	.2350	.2990	.3640	.4270	.5340	.6730	.7800	.8870	.9720	1.0000
X/CW										
.000	-.4240	-.2695	-.1639	.1864	.4243	.3830	.3453	.2561	-.5407	
.010		-.2569	-.0704		-.0719	-.0418	-.1514	-.3803		
.020		-.2022		.0000	-.1718	-.2294	-.3093	-.4710	-.7911	
.040			.0118	-.1707						
.041	-.5038									
.050					-.3791	-.4841	-.5616	-.6594		
.069									-.8108	
.080					-.5430					
.081				-.2941						
.086			.0220							
.094		-.0987								
.113	-.1136									
.150					-.7199	-.7923	-.7982	-.8354		
.157									-.9570	
.163			.0000							
.177				-.4830						
.220		-.0079								
.245			-.2708							
.247	-.0356									
.250					-.7310	-.8470	-.9859	-.8580		

AMES 11-073(OA148) -140A/B/C/R OPS LEFT WING TOP (XEBU65)

ALPHA (3) = 4.023 BETA (3) = 4.246

SECTION (1)LEFT WING TOP SURF DEPENDENT VARIABLE CP

Y/DW :	.2350	.2990	.3040	.4270	.5340	.6730	.7800	.8870	.9720	1.0000
X/CW										
.274				-.5666						
.345									-.5383	
.362		-.0897								
.390			-.5096							
.400					-.5774	-.9134		-.6335		
.402				-.6088						
.415										-1.0200
.429	.0167									
.497		-.4235								
.503									-.3684	
.547	-.2273									
.550					-.2818	-.2542				
.585				-.2098						
.620								-.4311		
.6[illegible]	-.4749									
.637			-.1655							
.650							-.2345			
.670									-.2117	
.700		-.1065				-.0977				
.723										-.4103
.725					-.0564					
.727	-.1487									
.750							.0690	-.1902		
.760				-.0804						
.775					.1062	.0414				
.793	.0456									
.798			-.1058							
.808				.1293						
.834		-.1224								
.839			.1521							
.850					.0918	.0650	.1274			
.857				.0753						
.862									-.0845	
.865		.1032								
.879			.0821							
.900		.0238			.0508			-.0256		
.905				.0345						
.919			.0354							
.950					.0108	.0821	.1145			
.953				-.0063						
.955			.0111							
.965		.0400								

AMES 11-073(OA148) -140A/B/C/R ORB LEFT WING TOP (XEBU65)

ALPHA (4) = 7.876 BETA (1) = -3.866 MACH = .89873 Q = 598.61 P = 1058.8 RN/L = 3.5706

SECTION (1)LEFT WING TOP SURF DEPENDENT VARIABLE CP

2Y/BW	.2350	.2990	.3640	.4270	.5340	.6730	.7800	.8870	.9720	1.0000
X/CW										
.000	-.2608	-.2914	-.2619	.2267	.4910	.4686	.4306	.3022	-.5639	
.010		-.3637	-.2029		-.2507	-.1645	-.3023	-.5569		
.020		-.3052		.0000	-.3618	-.3883	-.4763	-.6672	-1.0283	
.040			-.0945	-.3744						
.041	-.2087									
.050					-.5816	-.6377	-.7385	-.8688		
.059									-1.0158	
.080					-.7638					
.081				-.5350						
.085			-.0687							
.094		-.1415								
.113	-.1725									
.150					-.9700	-1.0335	-.9110	-.8459		
.157									-.9068	
.163			.0000							
.177				-.6607						
.229		-.0053								
.246			-.4249							
.247	-.0690									
.250					-.9965	-1.0292	-.7838	-.6336		
.274				-.7635						
.345									-.4743	
.362		-.1562								
.390			-.6585							
.400					-.7476	-.7112		-.5277		
.402				-.8931						
.418										-.8319
.429	.0022									
.497		-.5288								
.503									-.4149	
.547	-.3255									
.550					-.3242	-.5807				
.565				-.2361						
.600								-.4520		
.633	-.6714									
.637			-.0741							
.650							-.5171			
.670									-.4007	
.700		-.1086				-.4063				
.723										-.4218
.725					-.1035					
.727	-.1347									
.750							-.4245	-.3820		
.769				.0119						
.775					.0213	-.2604				

ORIGINAL PAGE IS OF POOR QUALITY

AMES 11-073(OA148) -140A/B/C/R ORB LEFT WING TOP (XEBOES)

ALPHA (4) = 7.876 BETA (1) = -3.866

SECTION (1)LEFT WING TOP SURF DEPENDENT VARIABLE CP

2Y/BW	.2350	.2990	.3640	.4270	.5340	.6730	.7800	.8870	.9720	1.0000
X/CW										
.793	.1923									
.798			-.0211							
.808				.1852						
.834		-.0114								
.839			.1782							
.850					.1036	-.1688	-.3385			
.857				.1267						
.862									-.3355	
.865		.2155								
.879			.0959							
.900		.1117			.0852			-.3067		
.905				.0801						
.919			.0496							
.950					.0768	-.0158	-.2792			
.953				.0345						
.955			.0318							
.965		.1094								

ALPHA (4) = 7.884 BETA (2) = .183 MACH = .89873 Q = 598.61 P = 1058.8 RN/L = 3.5706

SECTION (1)LEFT WING TOP SURF DEPENDENT VARIABLE CP

2Y/BW	.2350	.2990	.3640	.4270	.5340	.6730	.7800	.8870	.9720	1.0000
X/CW										
.000	-.3501	-.4808	-.3812	.0408	.3564	.3356	.2846	.1543	-.8324	
.010		-.4744	-.1995		-.4035	-.3220	-.4598	-.7108		
.020		-.3625		.0000	-.4085	-.5101	-.5948	-.7866	-1.1173	
.040			-.0795	-.4269						
.041	-.3980									
.050					-.6539	-.7309	-.8302	-.9677		
.059									-1.1431	
.080					-.8083					
.081				-.5712						
.086			-.0668							
.094		-.1837								
.113	-.1967									
.150					-.9530	-1.0702	-.9779	-.8601		
.157									-.8030	
.163			.0000							
.177				-.6535						
.229		-.1100								
.245			-.4128							
.247	- 0659									
.250					-.9777	-1.0711	-.8774	-.6600		

AMES 11-073(OA148) -140A/B/C/R ORB LEFT WING TOP (XE8U65)

ALPHA (4) = 7.884 BETA (2) = .183

SECTION (1)LEFT WING TOP SURF DEPENDENT VARIABLE CP

2Y/BW	.2350	.2990	.3640	.4270	.5340	.6730	.7800	.8870	.9720	1.0000
X/CW										
.274				-.7339						
.345									-.4863	
.352		-.1816								
.390			-.6584							
.400					-.8821	-.7803		-.5806		
.402				-.8679						
.418										-.6580
.429	-.0071									
.497		-.5622								
.503									-.4735	
.547	-.3482									
.550					-.3746	-.5879				
.565				-.2147						
.603								-.4947		
.633	-.6988									
.637			-.1381							
.650							-.5422			
.670									-.4185	
.700		-.1017				-.4075				
.723										-.4180
.725					-.1096					
.727	-.1792									
.750							-.4569	-.4278		
.760				-.0591						
.775					.0447	-.2080				
.793	.0970									
.798			-.1130							
.808				.1366						
.834		-.0813								
.839			.1160							
.850					.0782	-.1133	-.3720			
.857				.0677						
.862									-.3816	
.865		.1326								
.879			.0608							
.900		.0475			.0518			-.3534		
.905				.0289						
.919			.0416							
.950					.0414	-.0107	-.2537			
.953				-.0165						
.955			.0319							
.965		.0779								

AMES 11-073(OA148) -140A/B/C/R ORB LEFT WING TOP (XEBU65)

ALPHA (4) = 7.802 BETA (3) = 4.244 MACH = .89873 Q = 598.61 P = 1058.8 RN/L = 3.5706

SECTION (1)LEFT WING TOP SURF DEPENDENT VARIABLE CP

2Y/BW	.2350	.2990	.3640	.4270	.5340	.6730	.7800	.8870	.9720	1.0000
X/CW										
.000	-.4366	-.5828	-.2385	-.1246	.2008	.1820	.1256	-.0171	-.6660	
.010		-.3782	-.1637		-.5364	-.4858	-.6437	-.8810		
.020		-.3282		.0000	-.6048	-.6418	-.7541	-.9558	-.6435	
.040			-.1460	-.3972						
.041	-.5177									
.050					-.7059	-.8307	-.9420	-1.0760		
.069									-.5803	
.080					-.8315					
.081				-.4733						
.086			-.1555							
.094		-.3104								
.113	-.2086									
.150					-.9137	-1.1088	-1.0306	-1.0076		
.157									-.5264	
.163			.0000							
.177				-.5972						
.229		-.2265								
.246			-.5082							
.247	-.0793									
.250					-.9111	-1.0915	-.8940	-.7617		
.274				-.6959						
.345									-.5058	
.362		-.1143								
.390			-.6969							
.400					-.7938	-.8022		-.5933		
.402				-.8313						
.418										-.4833
.429	-.0271									
.497		-.5385								
.503									-.4898	
.547	-.3495									
.550					-.3476	-.5776				
.565				-.2300						
.600								-.5428		
.633	-.6624									
.637			-.1863							
.650							-.5601			
.676									-.4559	
.700		-.1748				-.3599				
.723										-.4228
.725					-.1106					
.727	-.2181									
.750							-.4675	-.4884		
.760				-.2110						
.775					.1256	-.1561				

AMES 11-073(OA148) -140A/B/C/R ORB LEFT WING TOP (XE8U65)

ALPHA (4) = 7.882 BETA (3) = 4.244

SECTION (1)LEFT WING TOP SURF DEPENDENT VARIABLE CP

2Y/BW	.2350	.2990	.3640	.4270	.5340	.6730	.7800	.8870	.9720	1.0000
X/CW										
.793	.0187									
.799			-.1427							
.808				-.0048						
.834		-.1490								
.839			.1100							
.850					.0589	-.0847	-.3625			
.857				-.0469						
.862									-.4053	
.865		.0673								
.879			.0444							
.900		-.0105			.0120			-.4309		
.905				-.0385						
.919			.0174							
.950					-.0012	.0147	-.2623			
.953				-.0374						
.955			.0162							
.965		.0375								

ALPHA (5) = 11.907 BETA (1) = -3.854 MACH = .89780 Q = 598.05 P = 1060.0 RN/L = 3.5707

SECTION (1)LEFT WING TOP SURF DEPENDENT VARIABLE CP

2Y/BW	.2350	.2990	.3640	.4270	.5340	.6730	.7800	.8870	.9720	1.0000
X/CW										
.000	-.2908	-.6808	-.5577	-.1614	.2359	.2221	.1654	.0194	-.7150	
.010		-.6898	-.2697		-.6908	-.5992	-.7574	-.8427		
.020		-.5919		.0000	-.8163	-.7837	-.8975	-.7074	-.6382	
.040			-.1755	-.6495						
.041	-.2709									
.050					-.9576	-.9975	-1.0598	-.6941		
.069									-.5619	
.080					-1.0495					
.081				-.7409						
.086			-.1722							
.094		-.3389								
.113	-.2524									
.150					-1.1844	-.9763	-1.0207	-.8403		
.157									-.5268	
.163			.0000							
.177				-.7935						
.199		-.2114								
.245			-.5478							
.247	-.1105									
.250					-1.0782	-.8733	-.8432	-.6332		

AMES 11-073(OA148) -140A/B/C/R ORB LEFT WING TOP (XEBU65)

ALPHA (5) = 11.907 BETA (1) = -3.854

SECTION (1)LEFT WING TOP SURF DEPENDENT VARIABLE CP

2Y/BW	.2350	.2990	.3640	.4270	.5340	.6730	.7800	.8870	.9720	1.0000
X/CW										
.274				-.8461						
.345									-.5107	
.362		-.3791								
.390			-.7637							
.400					-.7945	-.7600		-.5870		
.402				-.8379						
.418										-.4876
.429	-.0297									
.497		-.7578								
.503									-.4998	
.547	-.4777									
.550					-.6892	-.6429				
.565				-.4519						
.600								-.5491		
.633	-.8187									
.637			-.3031							
.650							-.6130			
.670									-.4678	
.700		-.1979				-.5736				
.723										-.4409
.725					-.3710					
.727	-.2047									
.750							-.5689	-.5264		
.760				-.2244						
.775					-.3357	-.5040				
.793	.0770									
.798			-.2709							
.808				-.0664						
.834		-.2017								
.839			-.0616							
.850					-.1968	-.4886	-.5402			
.857				-.0878						
.862									-.4358	
.865		.1009								
.879			-.0725							
.900		.0398			-.1785			-.4937		
.905				-.1062						
.919			- 0529							
.950					-.0988	-.3860	-.5047			
.953				-.1354						
.955			-.0103							
.965		.0865								

AMES 11-073(OA148) -140A/B/C/R ORB LEFT WING TOP (XEBU65)

ALPHA (5) = 11.920 BETA (2) = .190 MACH = .89780 Q = 598.05 P = 1060.0 RN/L = 3.5707

SECTION (1)LEFT WING TOP SURF DEPENDENT VARIABLE CP

2Y/BW	.2350	.2990	.3640	.4270	.5340	.6730	.7800	.8870	.9720	1.0000
X/CW										
.000	-.3948	-.7825	-.3357	-.3528	.0551	.0449	-.0153	-.1567	-.6950	
.010		-.5334	-.2775		-.8488	-.7541	-.9032	-.9133		
.020		-.4941		.0000	-.9587	-.9355	-1.0509	-.6599	-.6404	
.040			-.2633	-.5385						
.041	-.4547									
.050					-1.0619	-1.1071	-1.0665	-.6248		
.069									-.5920	
.080					-1.1073					
.081				-.6221						
.086			-.2614							
.094		-.4699								
.113	-.2762									
.150					-1.2111	-.9797	-.9986	-.6319		
.157									-.5716	
.163			.0000							
.177				-.7299						
.229		-.5806								
.246			-.5753							
.247	-.1630									
.250					-.9933	-.9103	-.8899	-.6360		
.274				-.8308						
.345									-.5417	
.362		-.2873								
.390			-.7718							
.400					-.7895	-.7940		-.6182		
.402				-.9468						
.418										-.5340
.429	-.0690									
.497		-.7365								
.503									-.5344	
.547	-.4981									
.550					-.6470	-.6854				
.565				-.3713						
.600								-.5735		
.633	-.8402									
.637			-.3307							
.650							-.6333			
.670									-.5109	
.700		-.2190				-.5839				
.723										-.4845
.725					-.3224					
.727	-.2275									
.750							-.5948	-.5615		
.760				-.2640						
.775					-.2560	-.5004				

AMES 11-073(OA148) -140A/B/C/R ORE LEFT WING TOP (XEBU65)

ALPHA (5) = 11.920 BETA (2) = .190

SECTION (1)LEFT WING TOP SURF DEPENDENT VARIABLE CP

2Y/BW	.2350	.2990	.3640	.4270	.5340	.6730	.7800	.8870	.9720	1.0000
X/CW										
.793	.0487									
.798			-.2829							
.808				-.2039						
.834		-.2468								
.839			-.0568							
.850					-.1936	-.4726	-.5623			
.857				-.2335						
.862									-.4755	
.865		-.0091								
.879			-.0828							
.900		-.0406			-.1795			-.5249		
.905				-.2229						
.919			-.0734							
.950					-.133[illegible]	-.3561	-.5200			
.953				-.2221						
.955			-.0410							
.965		.0293								

ALPHA (5) = 11.907 BETA (3) = 4.258 MACH = .89780 Q = 598.05 P = 1060.0 RN/L = 3.5707

SECTION (1)LEFT WING TOP SURF DEPENDENT VARIABLE CP

2Y/BW	.2350	.2990	.3640	.4270	.5340	.6730	.7800	.8870	.9720	1.0000
X/CW										
.000	-.5079	-.7721	-.3686	-.5210	-.1221	-.1357	-.2023	-.3322	-.7346	
.010		-.6401	-.3332		-.9917	-.9027	-1.0374	-.7588		
.020		-.6427		.0000	-1.0007	-1.0715	-.9598	-.7856	-.6380	
.040			-.3280	-.4610						
.041	-.6216									
.050					-1.1316	-1.1897	-.8429	-.7249		
.069									-.6055	
.080					-1.0991					
.081				-.5661						
.086			-.3071							
.094		-.6059								
.113	-.2454									
.150					-1.0793	-.9849	-.7493	-.6732		
.157									-.6184	
.163			.0000							
.177				-.6698						
.229		-.6693								
.245			-.6037							
.247	-.2544									
.250					-.8815	-.8028	-.7310	-.6672		

AMES 11-073(OA148) -140A/B/C/R ORB LEFT WING TOP (XE8U65)

ALPHA (5) = 11.907 BETA (3) = 4.258

SECTION (1)LEFT WING TOP SURF DEPENDENT VARIABLE CP

2Y/BW	.2350	.2990	.3640	.4270	.5340	.6730	.7800	.8870	.9720	1.0000
X/CW										
.274				-.8088						
.345									-.5891	
.362		-.2980								
.390			-.8102							
.400					-.6432	-.7524		-.6530		
.402				-.9489						
.418										-.5828
.429	-.1042									
.497		-.7222								
.503									-.5856	
.547	-.4749									
.550					-.5585	-.7129				
.565				-.3644						
.600								-.6027		
.633	-.8409									
.637			-.2948							
.650							-.6835			
.670									-.5649	
.700		-.1990				-.6356				
.723										-.5325
.725					-.3343					
.727	-.2206									
.750							-.6296	-.6058		
.760				-.3594						
.775					-.3171	-.5764				
.793	.0201									
.798			-.3341							
.808				-.3305						
.834		-.301[illegible]								
.839			-.1551							
.850					-.3595	-.5315	-.5959			
.857				-.3975						
.862									-.5336	
.865		-.0974								
.879			-.2009							
.900		-.1701			-.3291			-.5557		
.905				-.3043						
.919			-.1551							
.950					-.2352	-.3517	-.5517			
.953				-.2621						
.955			-.1060							
.965		.0092								

AMES 11-073(OA148) -140A/B/C/R ORB LEFT WING TOP (XE8U66) (05 AUG 75)

REFERENCE DATA

SREF = 2690.0000 SQ.FT. XMRP = 1076.6800 IN. XO
LREF = 474.8000 IN. YMRP = .0000 IN. YO
BREF = 936.0680 IN. ZMRP = 375.0000 IN. ZO
SCALE = .0300

PARAMETRIC DATA

RUDDER = 5.000 SPDBRK = 55.000
BDFLAP = 16.300 L-ELVN = -4.000
R-ELVN = -4.000 MACH = .600

ALPHA (1) = -4.037 BETA (1) = -7.846 MACH = .59482 Q = 591.26 P = 2387.4 RN/L = 4.8005

SECTION (1)LEFT WING TOP SURF DEPENDENT VARIABLE CP

2Y/BW	.2350	.2990	.3640	.4270	.5340	.6730	.7800	.8870	.9720	1.0000
X/CW										
.000	-.1496	-.1509	-.3065	-.1364	.0933	-.0005	-.0371	.0450	-1.1049	
.010		-.0108	-.0550		.6034	.5975	.5809	.5279		
.020		.0247		.0000	.5586	.5553	.5327	.4959	-.1497	
.040			.1059	.3762						
.041	.0356									
.050					.3470	.3434	.3206	.2951		
.059									-.1252	
.080					.1582					
.081				.2489						
.086			.2643							
.094		.0576								
.113	.0524									
.150					-.0590	-.0604	-.0562	-.0738		
.157									-.1340	
.163			.0000							
.177				.0047						
.229		.1565								
.245			.0556							
.247	.0828									
.250					-.1914	-.2255	-.2620	-.2904		
.274				-.1053						
.345									-.0972	
.362		.1215								
.390			-.0851							
.400					-.1295	-.1623		-.2435		
.402				-.1016						
.418										-.8038
.429	.1310									
.497		-.0482								
.503									-.1304	
.547	.0250									
.550					-.0319	-.0873				
.565				.0399						
.600								-.0945		
.633	-.0385									
.637			.0771							
.650							-.0288			
.670									-.0128	

DATE 11 FEB 76 TABULATED PRESSURE DATA -.0A148 (AMES 11-073-1)

AMES 11-073(0A148) -140A/B/C/F ORB LEFT WING TOP (XEBUSS)

ALPHA (1) = -4.037 BETA (1) = -7.846

SECTION (1)LEFT WING TOP SURF DEPENDENT VARIABLE CP

2Y/BW	.2350	.2990	.3640	.4270	.5340	.6730	.7800	.8870	.9720	1.0000
X/CW										
.700		.1056				.0024				-1.0978
.723										
.725					.0525					
.727	.0749						.2270	.1327		
.750										
.760				.0373						
.775					.2699	.1790				
.793	.2234									
.798			.0396							
.808				.2423						
.834		.0668								
.839			.2341							
.850					.1723	.1465	.1377			
.857				1566					-.0009	
.862										
.865		.2293								
.879			.1565							
.900		.1252			.1093			.1045		
.905				.1072						
.919			.0950							
.950					.0914	.1388	.1214			
.953				.0778						
.955			.0703							
.965		.0856								

ALPHA (1) = -3.899 BETA (2) = -3.843 MACH = .59482 Q = 591.28 P = 2387.4 RN/L = 4.8005

SECTION (1)LEFT WING TOP SURF DEPENDENT VARIABLE CP

2Y/BW	.2350	.2990	.3640	.4270	.5340	.6730	.7800	.8870	.9720	1.0000
X/CW										
.000	-.1549	-.1008	-.2001	-.0742	.0729	-.0519	-.1009	-.0307	-1.0139	
.010		-.0041	-.0287		.5401	.5287	.5039	.4589		
.020		.0152		.0000	.4937	.4886	.4659	.4263	-.2199	
.040			.0904	.3198						
.041	-.0168									
.050					.2992	.2905	.2791	.2407		
.069									-.1826	
.080					.1209					
.081				.2087						
.086			.2262							
.094		.0269								
.113	.0127									
.150					-.0839	-.0876	-.0720	-.1023		

DATE 11 FEB 76 TABULATED PRESSURE DATA - OA148 (AMES 11-073-1) E 14914

AMES 11-073(OA148) -140A/B/C/R ORB LEFT WI JF (XE8U66)

ALPHA (1) = -3.899 BETA (2) = -3.843

SECTION (1)LEFT WING TOP SURF DEPENDENT VARIABLE CP

2Y/BW	.2350	.2990	.3640	.4270	.5340	.6730	.7800	.8870	.9720	1.0000
X/CW										
.157									-.1771	
.163			.0000							
.177				-.0221						
.229		.1251								
.246			.0250							
.247	.0511									
.250					-.2125	-.2432	-.2707	-.2990		
.274				-.1330						
.345									-.1184	
.362		.0923								
.390			-.1086							
.400					-.1559	-.2022		-.2521		
.402				-.1382						
.418										-.7552
.429	.1011									
.497		-.0810								
.503									-.1344	
.547	-.0049									
.550					-.0682	-.1094				
.565				-.0026						
.600								-.0996		
.633	-.0799									
.637			.0358							
.650							-.0518			
.670									-.0178	
.700		.0615				-.0194				
.723										-1.1317
.725					.0190					
.727	.0359									
.750							.2188	.1245		
.760				.0000						
.775					.2458	.1513				
.793	.1840									
.799			.0061							
.808				.2099						
.934		.0250								
.839			.2051							
.850					.1501	.1218	.1320			
.857				.1349						
.862									-.0052	
.865		.1893								
.879			.1270							
.900		.0878			.0932			.1012		
.905				.0870						
.919			.0704							

AMES 11-073(OA148) -140A/B/C/R ORB LEFT WING TOP (XEBU66)

ALPHA (1) = -3.899 BETA (2) = -3.843

SECTION (1)LEFT WING TOP SURF DEPENDENT VARIABLE CP

2Y/BW	.2350	.2990	.3640	.4270	.5340	.6730	.7800	.8870	.9720	1.0000
X/CW										
.950					.0782	.1273	.1120			
.953				.0633						
.955			.0485							
.965		.0700								

ALPHA (1) = -3.894 BETA (3) = .194 MACH = .59482 Q = 591.26 P = 2387.4 RN/L = 4.8005

SECTION (1)LEFT WING TOP SURF DEPENDENT VARIABLE CP

2Y/BW	.2350	.2990	.3640	.4270	.5340	.6730	.7800	.8870	.9720	1.0000
X/CW										
.000	-.1520	-.0513	-.1147	-.0103	.0668	-.0852	-.1804	-.1295	-.9442	
.010		-.0017	.0035		.4754	.4530	.4302	.3938		
.020		-.0001		.0000	.4351	.4175	.4003	.3653	-.2808	
.040			.0816	.2681						
.041	-.0597									
.050					.2523	.2426	.2307	.2084		
.069									-.2374	
.050					.0904					
.081				.1764						
.086			.1920							
.094		.0030								
.113	-.0221									
.150					-.0953	-.1028	-.0878	-.1183		
.157									-.2102	
.163			.0000							
.177				-.0400						
.229		.0937								
.245			.0082							
.247	.0286									
.250					-.2325	-.2502	-.2750	-.3002		
.274				-.1508						
.345									-.1260	
.352		.0686								
.390			-.1209							
.400					-.1770	-.2203		-.2564		
.402				-.1603						
.418										-.6929
.429	.0785									
.497		-.0979								
.503									-.1418	
.547	-.0304									
.550					-.0958	-.1298				
.565				-.0431						

AMES 11-073(OA148) -140A/B/C/R ORB LEFT WING TOP (XE9066)

ALPHA (1) = -3.894 BETA (3) = .194

SECTION (1)LEFT WING TOP SURF DEPENDENT VARIABLE CP

2Y/BW	.2350	.2990	.3640	.4270	.5340	.6730	.7800	.8870	.9720	1.0000
X/CW										
.500								-.1075		
.633	-.1030									
.637			-.0024							
.650							-.0631			
.675									-.0225	
.700		.0197				-.0393				
.723										-1.1366
.725					-.0048					
.727	-.0035									
.750							.2117	.1209		
.760				-.0353						
.775					.2265	.1299				
.793	.1509									
.798			-.0236							
.808				.1838						
.834		-.0139								
.839			.1753							
.850					.1294	.0988	.1229			
.857				.1102						
.862									-.0044	
.865		.1528								
.879			.1094							
.900		.0550			.0755			.1030		
.905				.0697						
.919			.0509							
.950					.0700	.1162	.1082			
.953				.0508						
.955			.0330							
.965		.0473								

ALPHA (1) = -3.902 BETA (4) = 4.271 MACH = .59482 Q = 591.26 P = 2387.4 RN/L = 4.8005

SECTION (1)LEFT WING TOP SURF DEPENDENT VARIABLE CP

2Y/BW	.2350	.2990	.3640	.4270	.5340	.6730	.7800	.8870	.9720	1.0000
X/CW										
.000	-.1623	-.0276	-.0470	.0535	.0843	-.0695	-.1791	-.1583	-.8000	
.010		-.0036	.0257		.4119	.3858	.3596	.3259		
.020		-.0083		.0000	.3694	.3460	.3282	.2890	-.3097	
.040			.0777	.2237						
.041	-.0904									
.050					.2004	.1798	.1690	.1500		
.069									-.2656	
.080					.0501					

AMES 11-073(OA148) -140A/B/C/R ORB LEFT WING TOP (XEBJ56)

ALPHA (1) = -3.902 BETA (4) = 4.271

SECTION (1)LEFT WING TOP SURF DEPENDENT VARIABLE CP

2Y/BW	.2350	.2990	.3540	.4270	.5340	.6730	.7800	.8970	.9720	1.0000
X/CW										
.081				.1358						
.096			.1697							
.094		-.0122								
.113	-.0420									
.150					-.1178	-.1288	-.1208	-.1500		
.157									-.2378	
.163			.0000							
.177				-.0522						
.229		.0830								
.246			-.0094							
.247	.0111									
.250					-.2388	-.2654	-.2864	-.3144		
.274				-.1589						
.345									-.1423	
.362		.0557								
.390			-.1355							
.400					-.2023	-.2390		-.2599		
.402				-.1871						
.418										-.5449
.429	.0619									
.497		-.1192								
.543									-.1416	
.547	-.0404									
.550					-.1285	-.1498				
.565				-.0785						
.600								-.1083		
.633	-.1279									
.637			-.0371							
.650							-.0720			
.670									-.0302	
.700		-.0150				-.0533				
.723										-1.0228
.725					-.0297					
.727	-.0385									
.750							.2020	.1140		
.760				-.0591						
.775					.2041	.1117				
.793	.1135									
.798			-.0484							
.809				.1595						
.834		-.0438								
.839			.1513							
.850					.1184	.0819	.1221			
.857				.0910						
.862									-.0014	

AMES 11-073(OA148) -140A/B/C/R ORB LEFT WING TOP (XEBJ58)

ALPHA (1) = -3.902 BETA (4) = 4.271

SECTION (1)LEFT WING TOP SURF DEPENDENT VARIABLE CP

2Y/BW	.2350	.2990	.3640	.4270	.5340	.6730	.7800	.8870	.9720	1.0000
X/CW										
.855		.1233								
.879			.0863							
.900		.0302			.0523			.1005		
.905				.0524						
.919			.0313							
.950					.0516	.1083	.1049			
.953				.0354						
.955			.0177							
.965		.0299								

ALPHA (1) = -3.917 BETA (5) = 8.333 MACH = .59482 Q = 591.26 P = 2387.4 RN/L = 4.8005

SECTION (1)LEFT WING TOP SURF DEPENDENT VARIABLE CP

2Y/BW	.2350	.2990	.3640	.4270	.5340	.6730	.7800	.8870	.9720	1.0000
X/CW										
.000	-.1699	-.0228	.0179	.1118	.1246	-.0534	-.1761	-.1591	-.6841	
.010		-.0149	.0507		.3500	.3194	.2909	.2527		
.020		-.0242		.0000	.3025	.2753	.2581	.2241	-.3327	
.040			.0861	.1756						
.041	-.1149									
.050					.1487	.1307	.1240	.0978		
.069									-.2999	
.080					.0130					
.081				.1000						
.086			.1485							
.094		-.0228								
.113	-.0579									
.150					-.1373	-.1473	-.1384	-.1676		
.157									-.2577	
.163			.0000							
.177				-.0619						
.229		.0716								
.246			-.0294							
.247	.0039									
.250					-.2471	-.2755	-.2904	-.3110		
.274				-.1685						
.346									-.1485	
.332		.0427								
.350			-.1524							
.400					-.2178	-.2500		-.2623		
.402				-.2013						
.419										-.4271
.429	.0543									

DATE 11 FEB 75 TABULATED PRESSURE DATA - OA148 (AMES 11-073-1)

AMES 11-073(OA148) -140A/B/C/R ORB LEFT WING TOP (XE8U66)

ALPHA (1) = -3.917 BETA (5) = 8.333

SECTION (1)LEFT WING TOP SURF DEPENDENT VARIABLE CP

2Y/BW	.2350	.2990	.3640	.4270	.5340	.6730	.7800	.8870	.9720	1.0000
X/CW										
.497		-.1371								
.503									-.1312	
.547	-.0543									
.550					-.1532	-.1621				
.565				-.1000						
.600								-.1093		
.633	-.1523									
.637			-.0738							
.650							-.0778			
.670									-.0292	
.700		-.0479				-.0632				
.723										-.8916
.725					-.0422					
.727	-.0749									
.750							.1956	.1135		
.760				-.0735						
.775					.1909	.1009				
.793	.0811									
.798			-.0677							
.808				.1470						
.834		-.0666								
.839			.1338							
.850					.1080	.0736	.1190			
857				.0827						
.862									.0052	
.865		.1022								
.879			.0726							
.900		.0171			.0574			.1020		
.903				.0459						
.919			0210							
.950					.0622	.1071	.1088			
.953				.0349						
.955			.0191							
.965		.0278								

AMES 11-073(OA148) -140A/B/C/R ORB LEFT WING TOP (XEBU66)

ALPHA (2) = .066 BETA (1) = -7.886 MACH = .59550 Q = 592.43 P = 2386.4 RN/L = 4.8075

SECTION (1)LEFT WING TOP SURF DEPENDENT VARIABLE CP

2Y/BW	.2350	.2990	.3640	.4270	.5340	.6730	.7800	.8870	.9720	1.0000
X/CW										
.000	-.0690	.0451	.0511	.2839	.4749	.4444	.4114	.4710	-.2214	
.010		.0726	.1331		.4686	.5097	.4699	.3268		
.020		.0586		.0000	.3375	.3338	.3057	.2492	-.0730	
.040			.1778	.1837						
.041	-.0080									
.050					.0644	.0303	.0074	-.0212		
.069									-.1689	
.080					-.1446					
.081				.0145						
.086			.2068							
.094		.0213								
.113	.0074									
.150					-.3098	-.3450	-.3555	-.3351		
.157									-.2734	
.163			.0000							
.177				-.2164						
.229		.0892								
.246			-.1162							
.247	.0360									
.250					-.3768	-.4379	-.4919	-.5190		
.274				-.2781						
.345									-.2432	
.362		.0004								
.390			-.2113							
.400					-.2205	-.2901		-.3595		
.402				-.2055						
.418										-.1152
.429	.0568									
.497		-.1720								
.503									-.2653	
.547	-.0948									
.550					-.0774	-.1335				
.565				-.0058						
.600								-.1350		
.633	-.1308									
.637			.0513							
.650							-.0805			
.670									-.0758	
.700		.0655				-.0045				
.723										-.2564
.725					.0451					
.727	.0373									
.750							.2082	.1062		
.760				.0339						
.775					.2630	.1786				

AMES 11-073(OA148) -145A/B/C/R ORB LEFT WING TOP (XEBU66)

ALPHA (2) = .066 BETA (1) = -7.886

SECTION (1)LEFT WING TOP SURF DEPENDENT VARIABLE CP

2Y/BW	.2350	.2990	.3640	.4270	.5340	.6730	.7800	.8870	.9720	1.0000
X/CW										
.793	.2032									
.798			.0499							
.808				.2336						
.834		.0669								
.839			.2332							
.850					.1700	.1504	.1341			
.857				.1620						
.862									.0099	
.865		.2263								
.879			.1639							
.900		.1322			.1142			.1083		
.905				.1159						
.919			.1033							
.920					.1017	.1469	.1238			
.953				.0884						
.955			.0726							
.965		.1058								

ALPHA (2) = .075 BETA (2) = -3.862 MACH = .59550 Q = 592.43 P = 2386.4 RN/L = 4.8075

SECTION (1)LEFT WING TOP SURF DEPENDENT VARIABLE CP

2Y/BW	.2350	.2990	.3640	.4270	.5340	.6730	.7800	.8870	.9720	1.0000
X/CW										
.000	-.0986	.0261	.0616	.2835	.4491	.3984	.3735	.4115	-.2215	
.010		.0322	.1107		.3957	.4293	.3805	.2576		
.020		.0192		.0000	.2748	.2615	.2263	.1808	-.1300	
.040			.1428	.1271						
.041	-.0556									
.050					.0220	-.0253	-.0453	-.0699		
.069									-.2063	
.080					-.1697					
.081				-.0224						
.086			.1677							
.094		-.0133								
.113	-.0298									
.150					-.3230	-.3712	-.3705	-.3536		
.157									-.2682	
.163			.0000							
.177				-.2306						
.229		.0633								
.245			-.1369							
.247	.0078									
.250					-.3909	-.4481	-.4896	-.5181		

AMES 11-073(OA148) -140A/B/C/R ORB LEFT WING TOP (XE8U66)

ALPHA (2) = .075 BETA (2) = -3.962

SECTION (1)LEFT WING TOP SURF DEPENDENT VARIABLE CP

2Y/BW	.2350	.2990	.3640	.4270	.5340	.6730	.7800	.8870	.9720	1.0000
X/CW										
.274				-.2948						
.345									-.2298	
.362		-.0268								
.390			-.2377							
.400					-.2418	-.3061		-.3538		
.402				-.2327						
.418										-.1198
.429	.0325									
.497		-.2040								
.503									-.2448	
.547	-.1197									
.550					-.1086	-.1583				
.585				-.0437						
.600								-.1375		
.633	-.1668									
.637			.0005							
.650							-.0684			
.670									-.0601	
.700		.0213				-.0291				
.723										-.2539
.725					.0143					
.727	-.0040									
.750							.2049	.1130		
.760				.0021						
.775					.2385	.1497				
.793	.1570									
.798			.0137							
.808				.2048						
.834		.0287								
.839			.2029							
.850					.1518	.1286	.1284			
.857				.1381						
.862									.0215	
.865		.1812								
.879			.1308							
.900		.0953			.1019			.1137		
.905				.0936						
.919			.0785							
.950					.0878	.1390	.1234			
.953				.0705						
.955			.0608							
.965		.0793								

DATE 11 FEB 78 TABULATED PRESSURE DATA - OA148 (AMES 11-073-1) PAGE 4923

AMES 11-073(OA148) -140A/B/C/R ORB LEFT WING TOP (XEBU66)

ALPHA (2) = .076 BETA (3) = .175 MACH = .59550 Q = 592.43 P = 2386.4 RN/L = 4.8075

SECTION (1)LEFT WING TOP SURF DEPENDENT VARIABLE CP

2Y/BW	.2350	.2930	.3640	.4270	.5340	.6730	.7800	.8870	.9720	1.0000
X/CW										
.000	-.1311	.0012	.0569	.2681	.4187	.3609	.3239	.3396	-.2260	
.010		-.0106	.0849		.3134	.3523	.3067	.1883		
.020		-.0275		.0000	.2065	.1934	.1584	.1204	-.1757	
.040			.1106	.0791						
.041	-.1035									
.050					-.0284	-.0610	-.0915	-.0998		
.069									-.2364	
.080					-.2019					
.081				-.0493						
.086			.1289							
.094		-.0429								
.113	-.0627									
.150					-.3352	-.3663	-.3777	-.3604		
.157									-.2704	
.163			.0000							
.177				-.2399						
.229		.0413								
.246			-.1574							
.247	-.0152									
.250					-.3972	-.4487	-.4853	-.5069		
.274				-.3008						
.345									-.2101	
.362		-.0438								
.390			-.2478							
.400					-.2689	-.3257		-.3521		
.402				-.2543						
.418										-.1225
.429	.0135									
.497		-.2163								
.503									-.2115	
.547	-.1330									
.550					-.1424	-.1780				
.555				-.0786						
.600								-.1329		
.633	-.1945									
.637			-.0373							
.650							-.0847			
.670									-.0427	
.700		-.0142				-.0481				
.723										-.2539
.725					-.0104					
.727	-.0437									
.750							.1975	.1071		
.760				-.0250						
.775					.2099	.1245				

AMES 11-073(OA148) -140A/B/C/R ORB LEFT WING TOP (XEBU66)

ALPHA (2) = .076 BETA (3) = .175

SECTION (1)LEFT WING TOP SURF DEPENDENT VARIABLE CP

2Y/BW	.2350	.2990	.3640	.4270	.5340	.6730	.7800	.8870	.9720	1.0000
X/CW										
.793	.1177									
.798			-.0179							
.808				.1788						
.834		-.0090								
.839			.1624							
.850					.1324	.1028	.1240			
.857				.1131						
.862									.0278	
.865		.1393								
.879			.1016							
.890		.0586			.0781			.1097		
.905				.0697						
.919			.0533							
.950					.0763	.1278	.1185			
.953				.0576						
.955			.0389							
.965		.0543								

ALPHA (2) = .073 BETA (4) = 4.250 MACH = .59550 Q = 592.43 P = 2386.4 RN/L = 4.6075

SECTION (1)LEFT WING TOP SURF DEPENDENT VARIABLE CP

2Y/BW	.2350	.2990	.3640	.4270	.5340	.6730	.7800	.8870	.9720	1.0000
X/CW										
.000	-.1671	-.0456	.0277	.2449	.3829	.3280	.2933	.3049	-.2088	
.010		-.0587	.0513		.2228	.2559	.2122	.0807		
.020		-.0658		.0000	.1284	.1116	.0820	.0211	-.2281	
.040			.0796	.0312						
.041	-.1379									
.050					-.0836	-.1208	-.1439	-.1712		
.069									-.2889	
.080					-.2374					
.091				-.0847						
.086			.0920							
.094		-.0587								
.113	-.0865									
.150					-.3488	-.3906	-.3824	-.3834		
.157									-.2932	
.163			.0000							
.177				-.2452						
.229		.0312								
.245			-.1685							
.247	-.0270									
.250					-.4120	-.4568	-.4894	-.5123		

AMES 11-073(OA148) -140A/B/C/R ORB LEFT WING TOP (XEBU66)

ALPHA (2) = 073 BETA (4) = 4.250

SECTION (1)LEFT WING TOP SURF DEPENDENT VARIABLE CP

2Y/BW	.2350	.2990	.3640	.4270	.5340	.6730	.7800	.8870	.9720	1.0000
X/CW										
.274				-.3095						
.345									-.2034	
.362		-.0463								
.390			-.2562							
.400					-.2933	-.3373		-.3511		
.402				-.2764						
.418										-.1313
.429	.0019									
.497		-.2286								
.503									-.1934	
.547	-.1500									
.550					-.1696	-.1930				
.565				-.1176						
.600								-.1338		
.633	-.2180									
.637			-.0729							
.650							-.0967			
.670									-.0297	
.700		-.0525				-.0629				
.723										-.1964
.725					-.0380					
.727	-.0799									
.750							.1887	.1057		
.760				-.0587						
.775					.1825	.1039				
.793	.0761									
.798			-.0459							
.808				.1432						
.834		-.0442								
.839			.1314							
.850					.1097	.0841	.1172			
.857				.0871						
.862									.0387	
.865		.1027								
.879			.0766							
.890		.0295			.0665			.1105		
.906				.0496						
.919			.0304							
.950					.0670	.1140	.1139			
.953				.0456						
.955			.0257							
.965		.0282								

AMES 11-073(OA148) -140A/B/C/R ORB LEFT WING TOP (XE8U66)

ALPHA (2) = .069 BETA (5) = 8.308 MACH = .59550 Q = 592.43 P = 2386.4 RN/L = 4.8075

SECTION (1)LEFT WING TOP SURF DEPENDENT VARIABLE CP

2Y/BW	.2350	.2990	.3640	.4270	.5340	.6730	.7900	.8870	.9720	1.0000
X/CW										
.000	-.2172	-.1302	-.0343	.1972	.3498	.2885	.2529	.2470	-.2082	
.010		-.1219	.0055		.1272	.1658	.1269	.0063		
.020		-.1112		.0000	.0409	.0287	-.0018	-.0496	-.2655	
.040			.0388	-.0280						
.041	-.1697									
.050					-.1400	-.1702	-.1890	-.2246		
.069									-.3035	
.080					-.2678					
.081				-.1246						
.086			.0548							
.094		-.0745								
.113	-.1014									
.150					-.3535	-.3940	-.3948	-.3942		
.157									-.2869	
.163			.0000							
.177				-.2596						
.229		.0152								
.246			-.1785							
.247	-.0373									
.250					-.4175	-.4584	-.4813	-.5047		
.274				-.3140						
.345									-.1827	
.362		-.0598								
.390			-.2694							
.400					-.3077	-.3434		-.3453		
.402				-.2960						
.418										-.1558
.429	-.0093									
.497		-.2411								
.503									-.1670	
.547	-.1602									
.550					-.1917	-.2051				
.565				-.1480						
.600								-.1271		
.633	-.2447									
.637			-.1105							
.650							-.0947			
.670									-.0141	
.700		-.0907				-.0763				
.723										-.1471
.725					-.0546					
.727	-.1082									
.750							.1825	.1161		
.760				-.0711						
.775					.1687	.0895				

AMES 11-073(OA148) -140A/B/C/R ORB LEFT WING TOP (XE8'66)

ALPHA (2) = .069 BETA (5) = 8.308

SECTION (1)LEFT WING TOP SURF DEPENDENT VARIABLE CP

2Y/BW	.2350	.2990	.3640	.4270	.5340	.6730	.7800	.8870	.9720	1.0000
X/CW										
.793	.0425									
.799			-.0695							
.808				.1143						
.834		-.0681								
.839			.1076							
.850					.0983	.0740	.1147			
.857				.0682						
.862									.0499	
.865		.0730								
.879			.0542							
.900		.0047			.0564			.1088		
.905				.0387						
.919			.0151							
.950					.0644	.1074	.1151			
.953				.0319						
.955			.0120							
.965		.0176								

ALPHA (3) = 4.021 BETA (1) = -7.899 MACH = .59494 Q = 591.36 P = 2385.7 RN/L = 4.8049

SECTION (1)LEFT WING TOP SURF DEPENDENT VARIABLE CP

2Y/BW	.2350	.2990	.3640	.4270	.5340	.6730	.7800	.8870	.9720	1.0000
X/CW										
.000	-.0419	.0484	.1001	.4000	.6054	.5948	.5721	.5287	-.0469	
.010		-.0001	.1032		.1098	.1541	.0307	-.2044		
.020		-.0170		.0000	-.0501	-.1063	-.1757	-.2961	-.3788	
.040			.1056	-.0978						
.041	-.0481									
.050					-.3404	-.4196	-.4773	-.5164		
.069									-.4881	
.080					-.5332					
[illegible]				-.2805						
[illegible]			.0709							
[illegible]		-.0469								
.113	-.0327									
.150					-.5963	-.6837	-.7157	-.6623		
.157									-.5930	
.163			.0000							
.177				-.4478						
.223		.0139								
.245			-.3053							
.247	-.0050									
.250					-.5711	-.6779	-.7346	-.7789		

DATE 11 FEB 76 TABULATED PRESSURE DATA - OA148 (AMES 11-073-1)

AMES 11-073(OA148) -140A/B/C/R ORB LEFT WING TOP (XEBU66)

ALPHA (3) = [illegible]021 BETA (1) = -7.899

SECTION (1)LEFT WING TOP SURF DEPENDENT VARIABLE CP

2Y/BW	.2350	.2990	.3640	.4270	.5340	.6730	.7800	.8870	.9720	1.0000
X/CW										
.274				-.4355						
.345									-.5143	
.362		-.1294								
.390			-.3349							
.400					-.2982	-.3823		-.4648		
.402				-.2843						
.418										-.2843
.429	-.0099									
.497		-.2907								
.503									-.4836	
.547	-.2098									
.550					-.1001	-.1664				
.565				-.0290						
.600								-.1857		
.633	-.2122									
.637			.0232							
.650							-.0758			
.670									-.2420	
.700		.0275				-.0085				
.723										-.2499
.725					.0504					
.727	-.0050									
.750							.1917	.0805		
.760				.0629						
.775					.2466	.1713				
.793	.2080									
.798			.0673							
.808				.2219						
.834		.0772								
.839			.2301							
.850					.1653	.1668	.1280			
.857				.1719						
.862									-.0655	
.865		.2175								
.879			.1742							
.900		.1483			.1278			.1074		
.905				.1244						
.919			.1175							
.950					.1148	.1665	.1356			
.953				.1043						
.955			.0938							
.966		.1167								

AMES 11-073(OA148) -140A/B/C/R ORB LEFT WING TOP (XE8U66)

ALPHA (3) = 4.024 BETA (2) = -3.864 MACH = .59494 Q = 591.36 P = 2386.7 RN/L = 4.8049

SECTION (1)LEFT WING TOP SURF DEPENDENT VARIABLE CP

2Y/EW	.2350	.2990	.3640	.4270	.5340	.6730	.7800	.8870	.9720	1.0000
X/CW										
.000	-.1035	-.0331	.0179	.3166	.5289	.5061	.4862	.4247	-.1429	
.010		-.0814	.0191		-.0111	.0359	-.0735	-.3283		
.020		-.0899		.0000	-.1507	-.1994	-.2663	-.3966	-.4575	
.040			.0355	-.1767						
.041	-.1028									
.050					-.3918	-.4694	-.5477	-.5800		
.069									-.5298	
.080					-.5617					
.081				-.3255						
.085			.0203							
.094		-.0852								
.113	-.0774									
.150					-.6171	-.6916	-.7306	-.6811		
.157									-.5912	
.163			.0000							
.177				-.4693						
.229		-.0091								
.246			-.3322							
.247	-.0368									
.250					-.5813	-.6713	-.7346	-.7654		
.274				-.4582						
.345									-.4910	
.362		-.1546								
.390			-.3648							
.400					-.3327	-.4011		-.4529		
.402				-.3234						
.418										-.4032
.429	-.0413									
.497		-.3297								
.503									-.4508	
.547	-.2490									
.550					-.1370	-.1901				
.565				-.0729						
.600								-.1852		
.633	-.2608									
.637			-.0256							
.650							-.0896			
.670									-.2210	
.700		-.0188				-.0297				
.723										-.2932
.725					.0231					
.727	-.0531									
.750							.1876	.0852		
.750				.0291						
.775					.2121	.1398				

AMES 11-073(OA14B) -140A/B/C/R ORB LEFT WING TOP (XE8U6E)

ALPHA (3) = 4.024 BETA (2) = -3.864

SECTION (1)LEFT WING TOP SURF DEPENDENT VARIABLE CP

2Y/BW	.2350	.2990	.3640	.4270	.5340	.6730	.7800	.8870	.9720	1.0000
X/CW										
.793	.1581									
.798			.0344							
.808				.1831						
.834		.0359								
.839			.1900							
.850					.1494	.1371	.1254			
.857				.1349						
.862									-.0728	
.865		.1686								
.879			.1340							
.900		.1072			.1088			.1085		
.905				.1015						
.919			.0885							
.950					.1008	.1514	.1308			
.953				.0815						
.955			.0671							
.965		.0929								

ALPHA (3) = 4.022 BETA (3) = .186 MACH = .59494 Q = 591.36 P = 2386.7 RN/L = 4.8049

SECTION (1)LEFT WING TOP SURF DEPENDENT VARIABLE CP

2Y/BW	.2350	.2990	.3640	.4270	.5340	.6730	.7800	.8870	.9720	1.0000
X/CW										
.000	-.1676	-.1454	-.0937	.2233	.4436	.4206	.3993	.3299	-.2259	
.010		-.1775	-.0665		-.0918	-.0496	-.1531	-.3650		
.020		-.1656		.0000	-.2094	-.2666	-.3394	-.4431	-.4880	
.040			-.0213	-.7255						
.041	-.1563									
.050					-.4320	-.5090	-.5694	-.5932		
.069									-.5331	
.080					-.5784					
.081				-.3474						
.086			-.0275							
.094		-.1145								
.113	-.1150									
.150					-.5011	-.6788	-.7095	-.6587		
.157									-.5509	
.163			.0000							
.177				-.4720						
.229		-.0323								
.246			-.3423							
.247	-.0598									
.250					-.5820	-.6626	-.7156	-.7389		

AMES 11-073(OA148) -140A/B/C/R ORB LEFT WING TOP (XEBJ68)

ALPHA (3) = 4.022 BETA (3) = .186

SECTION (1)LEFT WING TOP SURF DEPENDENT VARIABLE CP

2Y/BW	.2350	.2990	.3640	.4270	.5340	.6730	.7800	.8870	.9720	1.0000
X/CW										
.274				-.4573						
.345									-.4329	
.352		-.1556								
.390			-.3724							
.400					-.3449	-.4149		-.4445		
.402				-.3408						
.418										-.4832
.429	-.0591									
.497		-.3349								
.503									-.3921	
.547	-.2660									
.550					-.1657	-.2049				
.555				-.1072						
.600								-.1727		
.633	-.2833									
.637			-.0682							
.650							-.0901			
.670									-.1530	
.700		-.0639				-.0461				
.723										-.2838
.725					-.0050					
.727	-.0879									
.750							.1859	.0977		
.760				.0036						
.775					.1844	.1166				
.793	.1156									
.798			-.0052							
.808				.1509						
.834		-.0111								
.839			.1517							
.850					.1255	.1207	.1208			
.857				.1061						
.862									-.0158	
.865		.1241								
.879			.0962							
.900		.0683			.0889			.1135		
.905				.0743						
.919			.0635							
.950					.0889	.1409	.1258			
.953				.0644						
.955			.0491							
.965		.0644								

AMES 11-073(OA148) -140A/B/C/R ORB LEFT WING TOP (XE3U56)

ALPHA (3) = 4.025 BETA (4) = 4.244 MACH = .59494 Q = 591.35 P = 2385.7 RN/L = 4.5249

SECTION (1)LEFT WING TOP SURF DEPENDENT VARIABLE CP

Z/BW	.2350	.2990	.3640	.4270	.5340	.6730	.7800	.8870	.9720	1.0000
X/CW										
.000	-.2323	-.2645	-.2166	.1090	.3409	.3207	.2827	.1939	-.4153	
.010		-.2569	-.1440		-.2161	-.1898	-.3114	-.5368		
.020		-.2255		.0000	-.3099	-.3727	-.4525	-.5897	-.5961	
.040			-.0776	-.2861						
.041	-.1918									
.050					-.4851	-.5813	-.6439	-.6643		
.059									-.5918	
.080					-.6091					
.081				-.3756						
.085			-.0558							
.094		-.1333								
.113	-.1371									
.150					-.6099	-.7019	-.7367	-.6978		
.157									-.5761	
.163			.0000							
.177				-.4682						
.229		-.0482								
.246			-.3391							
.247	-.0783									
.250					-.5829	-.6711	-.7176	-.7423		
.274				-.4568						
.345									-.4090	
.362		-.1796								
.330			-.3654							
.400					-.3694	-.4213		-.4409		
.402				-.3505						
.418										-.7317
.429	-.0766									
.497		-.3539								
.503									-.3708	
.547	-.2769									
.550					-.1941	-.2247				
.555				-.1510						
.600								-.1658		
.633	-.3105									
.637			-.1286							
.650							-.1068			
.670									-.1434	
.700		-.0922				-.0714				
.723										-.3041
.725					-.0286					
.727	-.1089									
.750							.1835	.0970		
.760				-.0402						
.775					.1397	.0881				

A [illegible] -140A/B/C/R ORB LEFT WING TOP (XEBUES)

ALPHA (3) = 4.025 BETA (4) =

SECTION (1)LEFT WING TOP SURF [illegible] NT VARIABLE CP

2Y/BW	.2350	.2990	.3640	.4270	.5340	.6730	.7800	.8870	.9720	1.0000
X/CW										
.793	.0904									
.798			-.0570							
.829				.0907						
.834		-.0560								
.839			.1289							
.850					.0956	.0872	.1141			
.857				.0681						
.862									-.0013	
.865		.0975								
.873			.0826							
.900		.0345			.0715			.1133		
.905				.0448						
.919			.0394							
.950					.0715	.1258	.1233			
.953				.0447						
.955			.0283							
.965		.0314								

ALPHA (3) = 4.031 BETA (5) = 8.294 MACH = .59494 Q = 591.36 P = 2386.7 RN/L = 4.8049

SECTION (1)LEFT WING TOP SURF DEPENDENT VARIABLE CP

2Y/BW	.2350	.2990	.3640	.4270	.5340	.6730	.7800	.8870	.9720	1.0000
X/CW										
.000	-.3068	-.4130	-.2417	-.0568	.2222	.1934	.1612	.0601	-.5914	
.010		-.3277	-.1332		-.3372	-.2969	-.4212	-.6360		
.020		-.2475		.0000	-.4108	-.4609	-.5403	-.6747	-.6630	
.040			-.1094	-.3161						
.041	-.2321									
.050					-.5365	-.6236	-.6741	-.7158		
.069									-.6066	
.080					-.6245					
.081				-.3722						
.086			-.1191							
.094		-.2221								
.113	-.1769									
.150					-.5973	-.6864	-.7133	-.6754		
.157									-.5433	
.163			.0000							
.177				-.4364						
.229		-.0345								
.246			-.4057							
.247	-.0802									
.250					-.5791	-.6527	-.6871	-.7122		

AMES 11-073(OA148) -140A/B/C/R ORB LEFT WING TOP (XE2U65)

ALPHA (3) = 4.031 BETA (5) = 8.294

SECTION (1) LEFT WING TOP SURF DEPENDENT VARIABLE CP

2Y/BW	.2350	.2990	.3640	.4270	.5340	.6730	.7600	.8870	.9720	1.0000
X/CW										
.274				-.4439						
.345									-.3708	
.352		-.1594								
.390			-.3745							
.400					-.3723	-.4325		-.4263		
.402				-.3689						
.418										-.8849
.429	-.0723									
.497		-.3493								
.503									-.3313	
.547	-.2720									
.550					-.2168	-.2380				
.565				-.2142						
.600								-.1574		
.633	-.3198									
.637			-.1316							
.650							-.1148			
.670									-.0950	
.700		-.1220				-.0824				
.723										-.2813
.725					-.0598					
.727	-.1371									
.750							.1671	.0997		
.760				-.1067						
.775					.0686	.0637				
.793	.0344									
.798			-.0674							
.808				.0897						
.819		-.0875								
.849			.1007							
.850					.0791	.0675	.1078			
.857				.0596						
.862									.0238	
.865		.0572								
.879			.0570							
.900		.0066			.0506			.1030		
.905				.0449						
.919			.0205							
.950					.0608	.1050	.1096			
.953				.0448						
.955			.0179							
.955		.0141								

AMES 11-073(OA148) -140A/B/C/R ORB LEFT WING TOP (XE8US6)

ALPHA (4) = 7.859 BETA (1) = -7.898 MACH = .59424 Q = 590.06 P = 2387.2 RN/L = 4.7971

SECTION (1)LEFT WING TOP SURF DEPENDENT VARIABLE CP

2Y/BW	.2350	.2990	.3640	.4270	.5340	.6730	.7800	.8870	.9720	1.0000
X/CW										
.000	-.0641	-.1232	-.1508	.2060	.4254	.3743	.3146	.1188	-.5614	
.010		-.2148	-.1553		-.5068	-.4951	-.7180	-1.1108		
.020		-.1995		.0000	-.6212	-.7546	-.9395	-1.1869	-1.1182	
.040			-.1212	-.5042						
.041	-.0850									
.050					-.8587	-1.0219	-1.1383	-1.2591		
.059										
.080									-1.0871	
.081					-1.0117					
.086				-.6505						
.094			-.1527							
.113	-.0693	-.1382								
.150										
.157					-.9109	-1.0514	-1.1134	-1.0496		
.163									-1.1323	
.177			.0000							
.229				-.6993						
.246		-.0620								
.247	-.0494		-.5063							
.250										
.274					-.7403	-.8505	-.9862	-1.0529		
.345				-.5828						
.362		-.2552							-.9095	
.390			-.4429							
.400					-.3505	-.4631		-.5998		
.402				-.3294						
.418										
.429	-.1002									-1.2182
.497		-.4130								
.503										
.547	-.3450								-.8101	
.550					-.0894	-.1847				
.565				-.0682						
.600										
.633	-.3070							-.2605		
.637			-.0432							
.650										
.670							-.1027			
.700		-.0068							-.5828	
.723						-.0096				
.725										-.9678
.727	-.0139				.0671					
.750										
.760							-.1743	.0334		
.775				.0312						
					.1961	.1543				

AMES 11-073(OA148) -140A/B/C/R ORB LEFT WING TOP (XEBUES)

ALPHA (4) = 7.989 BETA (1) = -7.888

SECTION (1)LEFT WING TOP SURF DEPENDENT VARIABLE CP

2Y/BW	.2350	.2990	.3640	.4270	.5340	.6730	.7800	.8870	.9720	1.0000
X/CW										
.793	.2418									
.798			.0548							
.808				.1537						
.834		.0805								
.839			.2299							
.850					.1708	.1731	.1179			
.857				.1444						
.862									-.3491	
.865		.2002								
.879			.1758							
.900		.1612			.1368			.0758		
.905				.1205						
.919			.1288							
.940					.1234	.1770	.1297			
.953				.1090						
.955			.1094							
.965		.1320								

ALPHA (4) = 7.986 BETA (2) = -3.859 MACH = .59424 Q = 590.06 P = 2387.2 RN/L = 4.7971

SECTION (1)LEFT WING TOP SURF DEPENDENT VARIABLE CP

2Y/BW	.2350	.2990	.3640	.4270	.5340	.6730	.7800	.8870	.9720	1.0000
X/CW										
.000	-.1577	-.2906	-.3556	.0295	.2680	.2243	.1348	-.0613	-.8447	
.010		-.3532	-.3001		-.6616	-.6677	-.9189	-1.3118		
.020		-.2997		.0000	-.7524	-.8905	-1.0720	-1.3580	-1.2496	
.040			-.2093	-.5912						
.041	-.1541									
.050					-.9344	-1.1001	-1 2547	-1.3525		
.069									-1.1516	
.080					-1.0507					
.081				-.6905						
.086			-.2095							
.094		-.1742								
.113	-.1223									
.150					-.9344	-1.0689	-1.1378	-1.0598		
.157									-1.1504	
.163			.0000							
.177				-.7144						
.229		-.0885								
.245			-.5199							
.247	-.0215									
.250					-.7549	-.8744	-.9486	-1.0548		

AMES 11-073(OA149) -140A/B/C/R ORB LEFT WING TOP (XE8J56)

ALPHA (4) = 7.996 BETA (2) = -3.859

SECTION (1)LEFT WING TOP SURF DEPENDENT VARIABLE CP

2Y/BW	.2350	.2930	.3640	.4270	.5340	.6730	.7800	.8870	.9720	1.0000
X/CW										
.274				-.6016						
.345									-.8735	
.362		-.2849								
.390			-.4600							
.400					-.3794	-.4864		-.6073		
.402				-.3649						
.418										-1.5627
.429	-.1223									
.497		-.4639								
.503									-.7666	
.547	-.3709									
.550					-.1269	-.2099				
.555				-.1177						
.600								-.2590		
.633	-.3421									
.637			-.0882							
.650							-.1214			
.670									-.6015	
.700		-.0812				-.0276				
.723										-1.0757
.725					.0402					
.727	-.0594									
.750							.1658	.0353		
.760				-.0051						
.775					.1262	.1112				
.793	.1780									
.799			-.0044							
.803				.1357						
.834		.0457								
.839			.1624							
.850					.1185	.1355	.1055			
.857				.1176						
.860									-.4606	
.865		.1916								
.879			.1247							
.900		.1323			.0824			.0702		
.905				.0930						
.919			.0884							
.950					.0761	.1587	.1194			
.953				.0834						
.955			.0775							
.955		.1061								

AMES 11-073(OA148) -140A/B/C/R CRB LEFT WING TOP (XE8UE5)

ALPHA (4) = 7.991 BETA (3) = .178 MACH = .59424 Q = 590.06 P = 2387.2 RN/L = 4.7971

SECTION (1)LEFT WING TOP SURF DEPENDENT VARIABLE CP

2Y/BW	.2350	.2990	.3640	.4270	.5340	.6730	.7800	.8870	.9720	1.0000
X/CW										
.000	-.2495	-.4694	-.5420	-.1481	.1124	.0670	-.0299	-.2353	-1.1131	
.010		-.4932	-.3983		-.8063	-.8174	-1.0766	-1.4402		
.020		-.3790		.0000	-.8566	-1.0006	-1.1707	-1.4601	-1.3712	
.040			-.2335	-.6371						
.041	-.2108									
.050					-.9663	-1.1482	-1.2913	-1.3684		
.069									-1.1933	
.080					-1.0592					
.081				-.7047						
.098			-.2080							
.094		-.2084								
.113	.1807									
.150					-.9039	-1.0701	-1.1263	-1.0116		
.157									-1.0593	
.163			.0000							
.177				-.6933						
.229		-.1566								
.246			-.5108							
.247	-.0999									
.250					-.7561	-.8660	-.9440	-1.0255		
.274				-.5803						
.345									-.7964	
.362		-.3317								
.390			-.4857							
.400					-.3926	-.4827		-.5883		
.402				-.3943						
.418										-1.8136
.429	-.1249									
.497		-.4889								
.503									-.7027	
.547	-.3919									
.550					-.1760	-.2200				
.565				-.1760						
.600								-.2535		
.633	-.3585									
.637			-.1638							
.650							-.1253			
.670									-.5432	
.700		-.0569				-.0437				
.723										-1.0339
.725					-.0200					
.727	-.1094									
.750							.1653	.0459		
.760				-.0377						
.775					.0510	.0740				

AMES 11-073(OA148) -140A/B/C/R ORB LEFT WING TOP (XEBUGS)

ALPHA (4) = 7.991 BETA (3) = .178

SECTION (1)LEFT WING TOP SURF DEPENDENT VARIABLE CP

2Y/BW	.2350	.2990	.3540	.4270	.5340	.6730	.7800	.8870	.9720	1.0000
X/CW										
.793	.1165									
.799			-.0440							
.808				.1081						
.834		-.0072								
.839			.1740							
.850					.0775	.1130	.1068			
.857				.0603						
.862									-.4438	
.865		.1544								
.879			.1284							
.900		.0844			.0608			.0739		
.905				.0273						
.919			.0841							
.950					.0791	.1470	.1112			
.953				.0250						
.955			.0777							
.965		.0765								

ALPHA (4) = 7.992 BETA (4) = 4.237 MACH = .59424 Q = 590.06 P = 2387.2 RN/L = 4.7971

SECTION (1)LEFT WING TOP SURF DEPENDENT VARIABLE CP

2Y/BW	.2350	.2990	.3540	.4270	.5340	.6730	.7800	.8870	.9720	1.0000
X/CW										
.000	-.3483	-.6283	-.5216	-.3352	-.0510	-.1066	-.2187	-.4760	-1.5233	
.010		-.4950	-.2659		-.9230	-.9622	-1.2384	-1.6356		
.020		-.3555		.0000	-.9182	-1.0965	-1.2998	-1.6406	-1.5118	
.040			-.2283	-.6132						
.041	-.2759									
.050					-.9901	-1.1803	-1.3340	-1.4799		
.069									-1.2203	
.080					-1.0322					
.081				-.6369						
.086			-.2602							
.094		-.3913								
.113	-.2273									
.150					-.8864	-1.0220	-1.0666	-1.0267		
.157									-1.0237	
.163			.0000							
.177				-.6310						
.229		-.2271								
.245			-.6116							
.247	-.1096									
.250					-.7232	-.8486	-.9286	-.9827		

AMES 11-073(OA148) -140A/B/C/R ORB LEFT WING TOP (XE9U66)

ALPHA (4) = 7.992 BETA (4) = 4.237

SECTION (1)LEFT WING TOP SURF DEPENDENT VARIABLE CP

2Y/BW	.2350	.2990	.3640	.4270	.5340	.6730	.7800	.8870	.9720	1.0000
X/CW										
.274				-.5941						
.345									-.7753	
.382		-.2516								
.390			-.6284							
.400					-.4012	-.4877		-.5655		
.402				-.4129						
.418										-2.2233
.429	-.1331									
.497		-.4703								
.503									-.6806	
.547	-.4046									
.550					-.2459	-.2261				
.565				-.2085						
.600								-.2465		
.623	-.3969									
.637			-.1423							
.650							-.1343			
.670									-.5418	
.700		-.1062				-.0712				
.723										-.9514
.725					-.0502					
.727	-.1447									
.750							.1282	.0462		
.760				-.1481						
.775					.1055	.0184				
.793	.0615									
.798			-.0631							
.808				.0374						
.834		-.0543								
.839			.1331							
.850					.1133	.0550	.0805			
.857				.0290						
.862									-.3897	
.869		.0906								
.879			.0659							
.900		.0435			.0720			.0640		
.905				.0245						
.919			.0420							
.950					.0859	.0935	.0910			
.953				.0391						
.956			.0378							
.966		.0385								

AMES 11-073(OA148) -140A/B/C/R ORB LEFT WING TOP (NEBUSS)

ALPHA (4) = 7.989 BETA (5) = 8.293 MACH = .59424 Q = 590.06 P = 2357.2 RN/L = 4.7971

SECTION (1)LEFT WING TOP SURF DEPENDENT VARIABLE CP

2Y/BW	.2350	.2990	.3640	.4270	.5340	.6730	.7800	.8870	9720	1.0000
X/CW										
.000	-.4555	-.7094	-.3645	-.4979	-.2366	-.2978	-.4130	-.6699	-1.8237	
.010		-.4067	-.3092		-1.0244	-1.1014	-1.3734	-1.7279		
.020		-.3959		.0000	-.9789	-1.1947	-1.3705	-1.7346	-1.4585	
.040			-.3097	-.5010						
.041	-.3801									
.070					-.9938	-1.1914	-1.3437	-1.4699		
.069									-1.1695	
.080					-.9874					
.081				-.5518						
.085			-.3483							
.094		-.4164								
.113	-.2171									
.150					-.8035	-.9784	-1.0198	-.9847		
.157									-.9384	
.163			.0000							
.177				-.5867						
.223		-.3115								
.246			-.7678							
.247	-.1397									
.250					-.6488	-.7942	-.8662	-.9121		
.274				-.5836						
.345									-.7230	
.362		-.2216								
.390			-.5135							
.400					-.4505	-.4479		-.5153		
.402				-.5600						
.418										-1.9757
.429	-.1390									
.497		-.4621								
.503									-.6585	
.547	-.3951									
.550					-.2410	-.2372				
.565				-.3281						
.600								-.2157		
.633	-.3861									
.637			-.1557							
.650							-.1162			
.670									-.4183	
.700		-.1400				-.0916				
.723										-.6908
.725					-.0711					
.727	-.1659									
.750							.0851	.0482		
.760				-.1310						
.775					.0364	-.0004				

DATE 11 FEB 76 TABULATED PRESSURE DATA - OA148 (AMES 11-073-1) PAGE 4942

AMES 11-073(OA148) -140A/B/C/R ORB LEFT WING TOP (XEBUSS)

ALPHA (4) = 7.989 BETA (5) = 8.293

SECTION (1)LEFT WING TOP SURF DEPENDENT VARIABLE CP

2Y/BW	.2350	.2990	.3640	.4270	.5340	.6730	.7800	.8870	.9720	1.0000
X/CW										
.793	.0136									
.798			-.0844							
.806				.0885						
.834		-.0875								
.839			.1075							
.850					.0077	.0273	.0799			
.857				.0602						
.862									-.2389	
.865		.0576								
.879			.0570							
.900		.0105			-.0527			.0593		
.905				.0469						
.919			.0226							
.950					-.0413	.1125	.0842			
.953				.0538						
.965			.0226							
.965		.0182								

ALPHA (5) = 12.002 BETA (1) = -7.846 MACH = .59422 Q = 590.06 P = 2327.2 PN/L = 4.7978

SECTION (1)LEFT WING TOP SURF DEPENDENT VARIABLE CP

2Y/BW	.2350	.2990	.3640	.4270	.5340	.6730	.7800	.8870	.9720	1.0000
X/CW										
.000	-.1555	-.5174	-.7652	-.3361	-.0876	-.2114	-.3471	-.6262	-1.7530	
.010		-.6065	-.6488		-1.4791	-1.5298	-1.9695	-2.3902		
.020		-.4817		.0000	-1.4834	-1.7246	-2.0993	-2.5037	-2.6005	
.040			-.4769	-1.0424						
.041	-.1457									
.050					-1.5733	-1.8750	-2.2181	-2.4649		
.059									-2.2629	
.080					-1.6518					
.081				-1.0918						
.095			-.4255							
.094		-.2174								
.113	-.1599									
.150					-1.2070	-1.3407	-1.2726	-1.2672		
.157									-1.7398	
.163			.0000							
.177				-.9210						
.177		-.1957								
.245			-.6581							
.247	-.0890									
.250					-.8820	-1.0588	-1.1562	-1.3321		

AMES 11-073(OA148) -140A/B/C/P OFB LEFT WING TOP

ALPHA (S. = 12.002 BETA (11 = -7.846

SECTION (1)LEFT WING TOP SURF DEPENDENT VARIABLE CP

2Y/BW	.2350	.2990	.3640	.4270	.5340	.6730	.7800	.8870	.9720	1.0000
X/CW										
.274				-.6712						
.345									-1.5557	
.352		-.4722								
.390			-.6023							
.400					-.3351	-.4877		-.7307		
.402				-.4314						
.418										-2.1087
.429	-.1959									
.497		-.7001								
.503									-1.3867	
.547	-.4701									
.550					-.1330	-.1635				
.565				-.1899						
.600								-.3915		
.633	-.3908									
.637			-.0897							
.650							-.1341			
.670									-.9034	
.700		-.0745				-.0196				
.723										-1.4429
.725					-.0010					
.727	-.0292									
.750							.0574	-.1068		
.760				.0026						
.775					.0318	.0566				
.793	.2232									
.795			-.0629							
.809				.1341						
.834		.0903								
.839			.1279							
.850					.0542	.1122	.0619			
.857				.0882						
.862									-.6557	
.865		.2661								
.879			.1298							
.900		.2046			.0343			-.0189		
.905				.0405						
.919			.1215							
.950					.0572	.1562	.0784			
.953				.0186						
.955			.1222							
.965		.1625								

DATE 11 FEB 76 TABULATED PRESSURE DATA - OA148 (AMES 11-073-1)

AMES 11-073(OA148) -140A/B/C/R ORB LEFT WING TOP

ALPHA (3) = 12.020 BETA (2) = -3.839 MACH = .59422 Q = 590.06 P = 2387.2 [illegible] = 4.7378

SECTION (1)LEFT WING TOP SURF DEPENDENT VARIABLE CP

2Y/BW	.2350	.2990	.3640	.4270	.5340	.6730	.7800	.8870	.9720	1.0000
X/CW										
.000	-.2743	-.7213	-.8653	-.5660	-.2879	-.4076	-.5700	-.8481	-2.1827	
.010		-.7213	-.5585		-1.6477	-1.7313	-2.1539	-2.6096		
.020		-.5237		.0000	-1.5815	-1.9007	-2.3107	-2.7086	-2.5353	
.040			-.3365	-1.0230						
.041	-.2348									
.050					-1.6186	-1.9389	-2.3400	-2.5950		
.059									-2.2428	
.060					-1.6282					
.061				-1.0091						
.066			-.3602							
.094		-.3712								
.113	-.2293									
.150					-1.1957	-1.3865	-1.3844	-1.2399		
.157									-1.6664	
.163			.0000							
.177				-.8474						
.229		-.4446								
.245			-.7244							
.247	-.1117									
.250					-.8480	-1.0525	-1.1343	-1.2570		
.274				-.7338						
.345									-1.6291	
.362		-.6146								
.390			-.5935							
.400					-.4111	-.4945		-.7057		
.402				-.5216						
.418										-1.8651
.429	-.1908									
.497		-.6696							-1.5318	
.603										
.647	-.5125									
.660					-.2433	-.1959				
.665				-.1116						
.800								-.3725		
.633	-.4371									
.637			-.2147							
.650							-.1422			
.670									-1.0313	
.700		-.0747				-.0611				
.723										-1.4342
.725					-.0934					
.727	-.1186						.0277	-.1255		
.750				-.0129						
.760					-.0070	.0332				
.775										

AMES 11-0T3(DA148) -140A/B/C/R OFB LEFT WING TOP [illegible]

ALPHA (5) = 12.020 BETA (2) = -3.839

SECTION (1)LEFT WING TOP SURF DEPENDENT VARIABLE CP

2Y/BW	.2350	.2990	.3640	.4270	.5340	.6730	.7800	.8870	.9720	1.0000
X/CW										
.793	.1401									
.799			-.0730							
.809				.1054						
.834		.0204								
.839			.1309							
.850					.0912	.0624	.0419			
.857				.0515						
.862									-.7301	
.865		.1961								
.879			.0912							
.900		.1394			.0899			-.0327		
.905				.0164						
.919			.0560							
.950					.1232	.1017	.0690			
.953				.0106						
.955			.0677							
.965		.1173								

ALPHA (5) = 11.933 BETA (3) = .186 MACH = .59422 Q = 590.06 P = 2337.2 P0/L = 4.7978

SECTION (1)LEFT WING TOP SURF DEPENDENT VARIABLE CP

2Y/BW	.2350	.2990	.3640	.4270	.5340	.6730	.7800	.8870	.9720	1.0000
X/CW										
.000	-.3960	-.8894	-.8676	-.7897	-.4835	-.6108	-.7633	-1.0393	-2.[illegible]	[illegible]
.010		-.6255	-.4300		-1.7590	-1.8983	-2.2911	-2.7241		
.020		-.4769		.0000	-1.6422	-1.9913	-2.4845	-2.8219	-2.0[illegible]	
.040			-.3960	-.9063						
.041	-.3570									
.050					-1.5726	-1.9367	-2.3531	-2.6536		
.069									-1.70[illegible]4	
.080					-1.5332					
.081				-.8494						
.085			-.4481							
.094		-.5224								
.113	-.2287									
.150					-1.1104	-1.3414	-1.3840	-1.3158		
.157									-1.5467	
.163			.0000							
.177				-.8451						
.223		-.6856								
.246			-.7947							
.247	-.1580									
.250					-.7642	-.9881	-1.0796	-1.1378		

AMES 11-073(OA148) -140A/B/C/R ORB LEFT WING TOP (XEBU66)

ALPHA (5) = 11.383 BETA (3) = .186

SECTION (11)LEFT WING TOP SURF DEPENDENT VARIABLE CP

2Y/BW	.2350	.2990	.3040	.4270	.5340	.6730	.7800	.8870	.9720	1.0000
X/CW										
.274				-.7616						
.345									-1.4984	
.362		-.5543								
.390			-.6823							
.400					-.4758	-.4491		-.6549		
.402				-.4777						
.418										-1.6328
.429	-.2382									
.497		-.6632								
.503									-1.3768	
.547	-.5254									
.550					-.3269	-.2285				
.555	/			-.2284						
.600								-.3350		
.633	-.4618									
.637			-.2729							
.650							-.1477			
.670									-.9504	
.700		-.1012				-.1040				
.723										-1.1008
.725					-.0337					
.727	-.1510									
.750							-.0324	-.1396		
.760				-.1746						
.775					.0929	-.0586				
.793	.0922									
.798			-.0825							
.808				-.0612						
.834		-.0202								
.839			.1435							
.850					.0917	-.0363	.0030			
.857				-.0746						
.862									-.6119	
.865		.1501								
.879			.1069							
.900		.1003			.0737			-.0474		
.905				-.0722						
.919			.0756							
.950					.0922	.0343	.0394			
.953				-.0495						
.955			.0777							
.965		.0925								

AMES 11-073(OA148) -140A/B/C/R ORB LEFT WING TOP (XE8U66)

ALPHA (5) = 11.990 BETA (4) = 4.247 MACH = .59422 Q = 590.06 P = 2387.2 RN/L = 4.7978

SECTION (1)LEFT WING TOP SURF DEPENDENT VARIABLE CP

2Y/BW	.2350	.2990	.3640	.4270	.5340	.6730	.7800	.8870	.9720	1.0000
X/CW										
.000	-.5232	-.9917	-.5977	-.8767	-.6566	-.8323	-1.0039	-1.2697	-2.6078	
.010		-.5443	-.4723		-1.8200	-2.0422	-2.4786	-2.6567		
.020		-.5286		.0000	-1.6267	-2.1054	-2.6297	-2.6372	-1.6806	
.040			-.4670	-.7376						
.041	-.5028									
.050					-1.4895	-1.8940	-2.4752	-2.4148		
.069									-1.5736	
.080					-1.3341					
.081				-.7974						
.096			-.5083							
.094		-.5708								
.113	-.2575									
.150					-.9740	-1.2792	-1.3381	-1.5490		
.157									-1.5362	
.163			.0000							
.177				-.8085						
.229		-.7010								
.246			-.8376							
.247	-.1980									
.250					-.7658	-.9033	-1.0185	-1.0239		
.274				-.7360						
.345									-1.3087	
.362		-.4890								
.390			-.8305							
.400					-.5394	-.4715		-.5760		
.402				-.6051						
.418										-1.1614
.429	-.2485									
.497		-.6056								
.503									-1.1789	
.547	-.5228									
.550					-.2748	-.3195				
.555				-.4849						
.600								-.2288		
.633	-.4731									
.637			-.2192							
.650							-.2141			
.670									-.8797	
.700		-.1372				-.1668				
.723										-.6020
.725					-.0842					
.727	-.1740									
.750							-.1122	-.0915		
.760				-.1928						
.775					-.0256	-.0316				

AMES 11-073(OA148) -140A/B/C/R ORB LEFT WING TOP (XEBUSS)

ALPHA (5) = 11.980 BETA (4) = 4.247

SECTION (1)LEFT WING TOP SURF DEPENDENT VARIABLE CP

2Y/BW	.2350	.2990	.3640	.4270	.5340	.6730	.7800	.8870	.9720	1.0000
X/CW										
.793	.0386									
.798			-.0774							
.809				-.0009						
.834		-.0611								
.839			.1342							
.850					-.0399	-.0058	-.0604			
.857				.0127						
.862									-.5548	
.865		.0959								
.879			.0933							
.900		.0520			-.0992			-.0794		
.905				.0213						
.919			.0593							
.950					-.0922	.0763	.0026			
.953				.0488						
.955			.0576							
.965		.0498								

ALPHA (5) = 11.973 BETA (5) = 8.307 MACH = .59422 Q = 590.06 P = 2387.2 RN/L = 4.7978

SECTION (1)LEFT WING TOP SURF DEPENDENT VARIABLE CP

2Y/BW	.2350	.2990	.3640	.4270	.5340	.6730	.7800	.8870	.9720	1.0000
X/CW										
.000	-.6773	-1.0980	-.5654	-.9601	-.6886	-1.0923	-1.2437	-1.5170	-1.9164	
.010		-.5965	-.5065		-1.8466	-2.2420	-2.6920	-2.4844		
.020		-.5930		.0000	-1.6018	-2.2829	-2.7908	-2.3254	-1.3880	
.040			-.5127	-.7239						
.041	-.7029									
.050					-1.3657	-1.7723	-2.6082	-2.1318		
.069									-1.3323	
.080					-1.2268					
.081				-.7705						
.086			-.5544							
.094		-.6275								
.113	-.3340									
.150					-.8927	-1.1802	-1.2764	-1.7533		
.157									-1.1763	
.163			.0000							
.177				-.7794						
.229		-.8436								
.245			-1.0104							
.247	-.2550									
.250					-.7956	-.8039	-.9375	-1.1241		

AMES 11-073(OA148) -140A/B/C/R ORB LEFT WING TOP (XE8U66)

ALPHA (5) = 11.973 BETA (5) = 8.307

SECTION (1)LEFT WING TOP SURF DEPENDENT VARIABLE CP

2Y/BW	.2350	.2990	.3640	.4270	.5340	.6730	.7800	.8870	.9720	1.0000
X/CW										
.274				-.7523						
.345									-1.0383	
.362		-.3955								
.390			-.7203							
.400					-.5125	-.5406		-.5472		
.402				-.7724						
.418										-.9449
.429	-.2374									
.497		-.6001								
.503									-.9625	
.547	-.4933									
.550					-.3678	-.3870				
.565				-.4803						
.600								-.2277		
.633	-.4667									
.637			-.2394							
.650							-.2919			
.670									-.7741	
.700		-.1841				-.2026				
.723										-.4617
.725					-.1872					
.727	-.1970									
.750							-.1467	-.0869		
.760				-.1734						
.775					-.2062	-.0442				
.793	-.0045									
.798			-.1022							
.808				.0235						
.834		-.0998								
.839			.0889							
.850					-.2099	-.0514	-.0652			
.857				.0152						
.862									-.4883	
.865		.0408								
.879			.0528							
.900		.0138			-.2460			-.0881		
.905				.0221						
.919			.0293							
.950					-.1797	.0170	.0082			
.953				.0453						
.955			.0329							
.966		.0245								

AMES 11-073(OA148) -140A/B/C/R ORB LEFT WING TOP (XEBU67) (05 AUG 75)

REFERENCE DATA

SREF = 2690.0000 SQ.FT. XMRP = 1076.6800 IN. XO
LREF = 474.8000 IN. YMRP = .0000 IN. YO
BREF = 936.0680 IN. ZMRP = 375.0000 IN. ZO
SCALE = .0300

PARAMETRIC DATA

RUDDER = .000 SPDBRK = 55.000
BDFLAP = 22.500 L-ELVN = -4.000
R-ELVN = -4.000 MACH = .900

ALPHA (I) = -3.954 BETA (I) = -3.849 MACH = .90057 Q = 600.66 P = 1058.0 RN/L = 3.6340

SECTION (I)LEFT WING TOP SURF DEPENDENT VARIABLE CP

2Y/BW	.2350	.2990	.3640	.4270	.5340	.6730	.7800	.8870	.9720	1.0000
X/CW										
.000	-.4397	-.0414	-.0924	.1528	.4180	.3182	.2576	.2714	-1.0704	
.010		.0400	.0593		.6205	.5837	.5478	.4518		
.020		.0473		.0000	.5541	.4991	.4664	.4102	-.3819	
.040			.1702	.3916						
.041	-.0319									
.050					.3397	.2853	.2581	.2081		
.069									-.4544	
.070					.1469					
.081				.2693						
.086			.2930							
.094		.0585								
.113	.0466									
.150					-.0764	-.1170	-.1222	-.1768		
.157									-.5307	
.163			.0000							
.177				-.0017						
.229		.1673								
.246			.0875							
.247	.0788									
.250					-.2675	-.3138	-.3705	-.4842		
.274				-.1440						
.345									-.0685	
.362		.1628								
.390			-.1206							
.400					-.1757	-.2991		-.6009		
.402				-.1679						
.418										-.5547
.429	.1656									
.497		-.0746								
.503									-.1063	
.547	.0362									
.550					-.0870	-.1813				
.565				.0156						
.600								-.0781		
.633	-.0939									
.637			.0680							
.650							-.0365			
.670									.0314	

AMES 11-073(OA148) -140A/B/C/R ORB LEFT WING TOP (XE8U57)

ALPHA (1) = -3.954 BETA (1) = -3.849

SECTION (1)LEFT WING TOP SURF DEPENDENT VARIABLE CP

2Y/BW	.2350	.2990	.3640	.4270	.5340	.6730	.7800	.8870	.9720	1.0000
X/CW										
.700		.0976				.0010				
.723										-1.0257
.725					.0329					
.727	.0655									
.750							.3330	.2076		
.760				.0066						
.775					.3539	.2187				
.793	.2251									
.799			.0098							
.808				.2951						
.834		.0196								
.839			.2726							
.850					.2139	.1562	.1891			
.857				.1855						
.862									.0484	
.865		.2619								
.879			.1781							
.900		.1284			.1308			.1444		
.905				.1284						
.919			.1111							
.950					.0881	.1524	.1324			
.953				.0695						
.955			.0728							
.965		.1057								

ALPHA (1) = -3.952 BETA (2) = .192 MACH = .90057 Q = 600.66 P = 1058.0 RN/L = 3.6340

SECTION (1)LEFT WING TOP SURF DEPENDENT VARIABLE CP

2Y/BW	.2350	.2990	.3640	.4270	.5340	.6730	.7800	.8870	.9720	1.0000
X/CW										
.000	-.4651	.0021	-.0238	.1691	.3558	.2329	.1525	.1563	-.7845	
.010		.0413	.0717		.5484	.5052	.4631	.3853		
.020		.0364		.0000	.4878	.4362	.4046	.3414	-.4479	
.040			.1504	.3377						
.041	-.1065									
.050					.2933	.2479	.2228	.1688		
.069									-.5083	
.080					.1213					
.081				.2345						
.086			.2518							
.094		.0345								
.113	.0315									
.150					-.0798	-.1156	-.1089	-.1855		

AMES 11-073(OA148) -140A/B/C/R ORB LEFT WING TOP (XE8U67)

ALPHA (1) = -3.952 BETA (2) = .192

SECTION (1)LEFT WING TOP SURF DEPENDENT VARIABLE CP

2Y/BW	.2350	.2990	.3640	.4270	.5340	.6730	.7800	.8870	.9720	1.0000
X/CW										
.157									-.5673	
.163			.0000							
.177				-.0018						
.229		.1402								
.246			.0653							
.247	.0594									
.250					-.2544	-.2966	-.3516	-.4765		
.274				-.1381						
.345									.0252	
.362		.1423								
.390			-.1153							
.400					-.1897	-.3004		-.5780		
.402				-.1740						
.418										-.3525
.429	.1396									
.497		-.0805								
.503									-.1190	
.547	.0162									
.550					-.1470	-.2660				
.565				-.0498						
.600								-.0837		
633	-.1022									
.637			.0105							
.650							-.0692			
.670									-.0007	
.700		.0434				-.0382				
.723										-1.0396
.725					-.0241					
.727	.0204									
.750							.3187	.1993		
.760				-.0642						
.775					.3133	.1839				
.793	.1655									
.798			-.0582							
.809				.2482						
.834		-.0637								
.839			.2232							
.850					.1720	.1164	.1756			
.857				.1378						
.862									.0347	
.865		.2047								
.873			.1309							
.900		.0687			.0981			.1273		
.905				.0848						
.919			.0677							

AMES 11-073(OA148) -140A/B/C/R ORB LEFT WING TOP (XE8U67)

ALPHA (1) = -3.952 BETA (2) = .192

SECTION (1)LEFT WING TOP SURF DEPENDENT VARIABLE CP

2Y/BW	.2350	.2990	.3640	.4270	.5340	.6730	.7800	.8870	.9720	1.0000
X/CW										
.950					.0606	.1273	.1195			
.953				.0383						
.955			.0325							
.965		.0646								

ALPHA (1) = -3.959 BETA (3) = 4.272 MACH = .90057 Q = 600.66 P = 1058.0 RN/L = 3.6340

SECTION (1)LEFT WING TOP SURF DEPENDENT VARIABLE CP

2Y/BW	.2350	.2990	.3640	.4270	.5340	.6730	.7800	.8870	.9720	1.0000
X/CW										
.000	-.4854	.0256	.0330	.1853	.3066	.1653	.0705	.0746	-.6977	
.010		.0375	.0873		.4819	.4281	.3874	.3120		
.020		.0315		.0000	.4261	.3680	.3349	.2775	-.4981	
.040			.1452	.2845						
.041	-.0977									
.050					.2506	.1961	.1710	.1200		
.069									-.5485	
.080					.0920					
.081				.1976						
.085			.2255							
.094		.0242								
.113	.0077									
.150					-.0841	-.1280	-.1211	-.2119		
.157									-.5858	
.163			.0000							
.177				-.0090						
.229		.1254								
.246			.0471							
.247	.0569									
.250					-.2461	-.2954	-.3496	-.4817		
.274				-.1318						
.345									-.3176	
.362		.1271								
.390			-.1142							
.400					-.2063	-.3177		-.5921		
.402				-.1818						
.418										-.3059
.429	.1262									
.497		-.0860								
.503									-.0971	
.547	.0077									
.550					-.2087	-.3600				
.565				-.0959						

AMES 11-073(OA148) -140A/B/C/R ORB LEFT WING TOP (XE8U67)

ALPHA (1) = -3.959 BETA (3) = 4.272

SECTION (1)LEFT WING TOP SURF DEPENDENT VARIABLE CP

2Y/BW	.2350	.2990	.3640	.4270	.5340	.6730	.7800	.8870	.9720	1.0000
X/CW										
.600								-.0874		
.633	-.1126									
.637			-.0521							
.650							-.1050			
.670									-.0088	
.700		-.0058				-.0785				
.723										-.8919
.725					-.0903					
.727	-.0282									
.750							.3096	.2127		
.760				-.1329						
.775					.2763	.1497				
.793	.0970									
.798			-.1383							
.808				.2030						
.834		-.1444								
.839			.1723							
.850					.1381	.0856	.1701			
.857				.0954						
.862									.0274	
.865		.1439								
.879			.0795							
.900		.0233			.0636			.1264		
.905				.0525						
.919			.0320							
.950					.0385	.1105	.1161			
.953				.0111						
.955			.0060							
.965		.0309								

ALPHA (2) = .049 BETA (1) = -3.871 MACH = .90130 Q = 601.04 P = 1056.9 RN/L = 3.515T

SECTION (1)LEFT WING TOP SURF DEPENDENT VARIABLE CP

2Y/BW	.2350	.2990	.3640	.4270	.5340	.6730	.7800	.8870	.9720	1.0000
X/CW										
.000	-.3695	.0477	.1070	.3769	.5492	.4809	.4502	.4531	-.3562	
.010		.0463	.1534		.4620	.4685	.4222	.2754		
.020		.0293		.0000	.3418	.3040	.2768	.2088	-.2845	
.040			.1923	.2057						
.041	-.1344									
.050					.0741	.0176	-.0024	- 0518		
.069									-.3633	
.090					-.1404					

AMES 11-073(OA148) -140A/B/C/R ORB LEFT WING TOP (XE8U57)

ALPHA (2) = .049 BETA (1) = -3.871

SECTION (1)LEFT WING TOP SURF DEPENDENT VARIABLE CP

2Y/BW	.2350	.2990	.3640	.4270	.5340	.6730	.7800	.8870	.9720	1.0000
X/CW										
.081				.0429						
.086			.2252							
.094		.0108								
.113	-.0274									
.150					-.3640	-.4124	-.4116	-.4311		
.157									-.6768	
.163			.0000							
.177				-.2401						
.229		.1084								
.246			-.0893							
.247	.0310									
.250					-.4998	-.6199	-.6531	-.6600		
.274				-.3838						
.345									-.3590	
.362		.0409								
.390			-.3232							
.400					-.2869	-.3720		-.8566		
.402				-.3445						
.418										-.2875
.429	.1013									
.497		-.2470								
.503									-.2160	
.547	-.1019									
.550					-.1187	-.1520				
.565				-.0261						
.600								-.0281		
.633	-.2675									
.647			.0256							
.660							-.0021			
.670									-.0573	
.700		.0459				.0233				
.723										-.2653
.725					.0441					
.727	.0098									
.750							.3096	.1793		
.760				.0292						
.775					.3239	.2142				
.793	.1912									
.798			.0289							
.808				.2860						
.834		.0298								
.839			.2679							
.850					.2074	.1651	.1747			
.857				.1871						
.862									.0108	

AMES 11-073(OA148) -140A/B/C/R ORB LEFT WING TOP (XE2067)

ALPHA (2) = .049 BETA (1) = -3.871

SECTION (1)LEFT WING TOP SURF DEPENDENT VARIABLE CP

2Y/BW	.2350	.2990	.3640	.4270	.5340	.6730	.7800	.8870	.9720	1.0000
X/CW										
.865		.2471								
.879			.1859							
.900		.1396			.1334			.1268		
.905				.1290						
.919			.1178							
.920					.0833	.1481	.1131			
.953				.0705						
.955			.0769							
.985		.1149								

ALPHA (2) = .052 BETA (2) = .177 MACH = .90130 Q = 601.04 P = 1099.9 PN/L = 3.6167

SECTION (1)LEFT WING TOP SURF DEPENDENT VARIABLE CP

2Y/BW	.2350	.2990	.3640	.4270	.5340	.6730	.7800	.8870	.9720	1.0000
X/CW										
.000	-.4045	.0124	.0909	.3530	.4988	.4132	.3808	.3735	-.3614	
.010		.0008	.1182		.3723	.3853	.3417	.2047		
.020		-.0104		.0000	.2657	.2290	.2019	.1380	-.3444	
.040			.1561	.1430						
.041	-.2177									
.050					.0237	-.0319	-.0598	-.0985		
.069									-.4218	
.080					-.1692					
.081				.0042						
.096			.1834							
.094		-.0097								
.113	-.0402									
.150					-.3717	-.4020	-.4175	-.4573		
.157									-.7096	
.163			.0000							
.177				-.2399						
.229		.0945								
.246			-.1055							
.247	.0136									
.260					-.4868	-.6009	-.6563	-.6878		
.274				-.3674						
.345									-.2032	
.362		.0223								
.372			-.3189							
.400					-.2988	-.4072		-.8655		
.402				-.3603						
.418										-.3569
.429	.0788									

AMES 11-073(0A148) -140A/B/C/R 0RB LEFT WING TOP (XEBU37)

ALPHA (2) = .052 BETA (2) = .177

SECTION (1)LEFT WING TOP SURF DEPENDENT VARIABLE CP

2Y/BW	.2350	.2930	.3540	.4270	.5340	.6730	.7800	.8870	.9720	1.0000
X/CW										
.497		-.2499								
.503									-.1542	
.547	-.1137									
.550					-.1974	-.3239				
.565				-.0913						
.600								-.0312		
.633	-.2658									
.637			-.0388							
.650							-.0285			
.670									-.0424	
.700		-.0106				-.0139				
.723										-.2765
.725					-.0044					
.727	-.0424									
.750							.3088	.1799		
.760				-.0278						
.775					.2899	.1807				
.793	.1212									
.799			-.0348							
.808				.2442						
.834		-.0448								
.839			.2110							
.853					.1755	.1345	.1695			
.857				.1430						
.862									.0263	
.865		.1791								
.879			.1328							
.900		.0842			.1023			.1219		
.905				.0889						
.919			.0799							
.950					.0540	.1225	.1037			
.953				.0333						
.955			.0394							
.965		.0719								

AMES 11-073(OA148) -140A/B/C/R CRB LEFT WING TOP "NEWSOT"

ALPHA (2) = .052 BETA (3) = 4.253 MACH = .90130 Q = 601.0+ P = 1055.9 PN/L = 3.5157

SECTION (1)LEFT WING TOP SURF DEPENDENT VARIABLE CP

BY/BW	.2350	.2930	.3540	.4270	.5340	.6730	.7800	.8870	.9720	1.0000
X/CW										
.000	-.4530	-.0313	.0537	.3131	.4520	.3654	.3224	.3082	-.3363	
.010		-.0413	.0854		.2923	.2940	.2436	.1117		
.020		-.0451		.0000	.1888	.1426	.1115	.0466	-.3985	
.040			.1224	.0908						
.041	-.3704									
.050					-.0262	-.0874	-.1291	-.1757		
.069									-.4827	
.080					-.1979					
.081				-.0253						
.086			.1458							
.094		-.0251								
.113	-.0466									
.150					-.3713	-.4[illegible]05	-.4414	-.4971		
.157									-.7462	
.163			.0000							
.177				-.2349						
.229		.0580								
.246			-.1112							
.247	.0055									
.250					-.4826	-.5951	-.6546	-.7139		
.274				-.3113						
.345									-.6355	
.362		.0107								
.390			-.2815							
.400					-.3045	-.4349		-.7651		
.402				-.3607						
.418										-.4735
.429	.0629									
.497		-.2447								
.503									-.1355	
.547	-.1243									
.550					-.2739	-.4444				
.565				-.1521						
.600								-.0404		
.633	-.2683									
.637			-.0961							
.650							-.0571			
.670									-.0202	
.700		-.0547				-.0590				
.723										-.2482
.725					-.0819					
.727	-.0829									
.750							.3101	.1989		
.760				-.1203						
.775					.2445	.1412				

[illegible] (1-0723/C/149 -140A/B/C/R OFB LEFT WING TOP (DEBUG)

ALPHA (2) = .052 BETA (3) = 4.253

SECTION (1)LEFT WING TOP SURF DEPENDENT VARIABLE CP

2Y/BW	.2350	.2990	.3540	.4270	.5340	.6730	.7800	.8870	.9720	1.0000
X/CW										
.793	.0460									
.799			-.1087							
.808				.1800						
.834		-.1475								
.839			.1475							
.850					.1369	.1080	.1714			
.857				.1007						
.862									.0395	
.875		.0910								
.879			.0789							
.900		.0199			.0693			.1271		
.905				.0543						
.919			.0310							
.950					.0290	.1125	.1037			
.953				.0079						
.955			.0048							
.965		.0401								

ALPHA (3) = 4.019 BETA (1) = -3.977 MACH = .89937 Q = 533.87 P = 1059.3 PN/L = 3.5007

SECTION (1)LEFT WING TOP SURF DEPENDENT VARIABLE CP

2Y/BW	.2350	.2990	.3540	.4270	.5340	.6730	.7800	.8870	.9720	1.0000
X/CW										
.000	-.3007	-.0358	.0573	.4096	.6108	.5760	.5464	.4859	-.1959	
.010		-.0875	.0656		.1646	.2056	.1089	-.1345		
.020		-.0303		.0000	.0280	-.0095	-.0759	-.2099	-.5405	
.040			.1015	-.0452						
.041	-.1925									
.050					-.2476	-.3235	-.3904	-.4831		
.069									-.6380	
.080					-.4677					
.081				-.2288						
.085			.0968							
.094		-.0524								
.113	-.1068									
.150					-.7035	-.7340	-.7274	-.7321		
.157									-.8613	
.163			.0000							
.177				-.4691						
.229		.0506								
.245			-.2694							
.247	-.0102									
.250					-.7599	-.9222	-.9649	-.7636		

AMES 11 073(OA148) -140A/B/C/R ORB LEFT WING TOP (XE8U57)

ALPHA (3) = 4.019 BETA (1) = -3.877

SECTION (1)LEFT WING TOP SURF DEPENDENT VARIABLE CP

2Y/BW	.2350	.2990	.3640	.4270	.5340	.6730	.7800	.8870	.9720	1.0000
X/CW										
.274				-.5956						
.345									-.5304	
.362		-.0678								
.390			-.5380							
.400					-.7077	-.8644		-.5518		
.402				-.7092						
.418										-.7478
.429	.0440									
.497		-.4247								
.503									-.3580	
.547	-.2110									
.550					-.1209	-.2294				
.565				-.0826						
.600								-.4032		
.633	-.5124									
.637			-.0233							
.650							-.3238			
.670									-.2781	
.700		-.0430				-.0390				
.723										-.4709
.725					.0408					
.727	-.0852									
.750							-.1136	-.2233		
.760				.0579						
.775					.1993	.1316				
.793	.1955									
.798			.0593							
.808				.2424						
.834		.0399								
.839			.2527							
.850					.1741	.1255	.0397			
.857				.1800						
.862									-.1444	
.865		.2399								
.879			.1843							
.900		.1366			.1239			-.0797		
.905				.1260						
.919			.1183							
.950					.0783	.1456	.0998			
.953				.0730						
.955			.0828							
.965		.1315								

AMES 11-073(OA148) -140A/B/C/R ORB LEFT WING TOP (XEBU57)

ALPHA (3) = 4.018 BETA (2) = .181 MACH = .69387 Q = 599.87 P = 1058.3 RN/L = 3.6007

SECTION (1)LEFT WING TOP SURF DEPENDENT VARIABLE CP

2Y/BW	.2350	.2990	.3540	.4270	.5340	.6730	.7800	.8870	.9720	1.0000
X/CW										
.000	-.3550	-.1474	-.0539	.3138	.5269	.4830	.4564	.3976	-.3233	
.010		-.1820	-.0190		.0548	.0933	-.0075	-.2257		
.020		-.1566		.0000	-.0595	-.1044	-.1800	-.3096	-.6373	
.040			.0430	-.1092						
.041	-.3977									
.050					-.3022	-.3949	-.4594	-.5485		
.069									-.7053	
.080					-.5059					
.081				-.2632						
.080			.0530							
.094		-.0820								
.113	-.1094									
.150					-.7127	-.7585	-.7542	-.7753		
.157									-.8796	
.163			.0000							
.177				-.4786						
.229		.0259								
.246			-.2800							
.247	-.0305									
.250					-.7442	-.9030	-.9736	-.8144		
.274				-.5876						
.345									-.5339	
.362		-.0936								
.390			-.5333							
.400					-.6836	-.9374		-.5995		
.402				-.6811						
.418										-.9155
.429	.0211									
.497		-.4207								
.503									-.3636	
.547	-.2214									
.550					-.1806	-.1323				
.565				-.1293						
.600								-.4029		
.633	-.5038									
.637			-.0831							
.650							-.2603			
.670									-.2204	
.700		-.0770				-.0558				
.723										-.4198
.725					-.0023					
.727	-.1091									
.750							.0034	-.1963		
.760				.0131						
.775					.1913	.0971				

ORIGINAL PAGE IS
OF POOR QUALITY

AMES 11-073(OA148) -140A/B/C/R ORB LEFT WING TOP (XE8U67)

ALPHA (3) = 4.018 BETA (2) = .181

SECTION (1)LEFT WING TOP SURF DEPENDENT VARIABLE CP

2Y/BW	.2350	.2990	.3640	.4270	.5340	.6730	.7800	.8870	.9720	1.0000
X/CW										
.793	.1380									
.798			-.0144							
.808				.1806						
.834		-.0450								
.839			.1998							
.850					.1468	.0985	.1049			
.857				.1334						
.862									-.1004	
.865		.1536								
.879			.1324							
.900		.0780			.0944			-.0426		
.905				.0856						
.919			.0774							
.950					.0505	.1167	.1305			
.953				.0406						
.955			.0439							
.965		.0873								

ALPHA (3) = 4.022 BETA (3) = 4.243 MACH = .89987 Q = 599.87 P = 1058.3 RN/L = 3.5007

SECTION (1)LEFT WING TOP SURF DEPENDENT VARIABLE CP

2Y/BW	.2350	.2990	.3640	.4270	.5340	.6730	.7800	.8870	.9720	1.0000
X/CW										
.000	-.4273	-.2681	-.1672	.1907	.4264	.3842	.3456	.2602	-.5522	
.010		-.2558	-.0688		-.0715	-.0380	-.1515	-.3833		
.020		-.2056		.0000	-.1624	-.2328	-.3122	-.4749	-.7885	
.040			.0074	-.1739						
.041	-.5187									
.050					-.3761	-.4809	-.5608	-.6597		
.069									-.8137	
.080					-.5481					
.081				-.3003						
.086			.0190							
.094		-.0972								
.113	-.1197									
.150					-.7234	-.7921	-.7999	-.8366		
.157									-.9651	
.163			.0000							
.177				-.4843						
.229		-.0041								
.246			-.2717							
.247	-.0359									
.250					-.7279	-.8589	-.9909	-.8612		

AMES 11-073(OA148) -140A/B/C/R ORB LEFT WING TOP (XEBU67)

ALPHA (3) = 4.022 BETA (3) = 4.243

SECTION (1)LEFT WING TOP SURF DEPENDENT VARIABLE CP

2Y/BW	.2350	.2990	.3640	.4270	.5340	.6730	.7800	.8870	.9720	1.0000
X/CW										
.274				-.5729						
.345									-.5472	
.362		-.0898								
.380			-.5063							
.400					-.5936	-.9335		-.6457		
.402				-.5176						
.418										-1.0687
.429	.0145									
.497		-.4246								
.503									-.3983	
.547	-.2217									
.550					-.2804	-.2556				
.555				-.2145						
.600								-.4384		
.633	-.4834									
.637			-.1590							
.650							-.2636			
.670									-.2210	
.700		-.1118				-.1056				
.723										-.4193
.725					-.0547					
.727	-.1538									
.750							.0475	-.2161		
.760				-.0881						
.775					.1040	.0198				
.793	.0480									
.799			-.1060							
.809				.1274						
.834		-.1464								
.839			.1509							
.850					.0948	.0622	.1136			
.857				.0774						
.862									-.1006	
.865		.1084								
.879			.0905							
.900		.0239			.0535			-.0332		
.905				.0402						
.919			.0378							
.950					.0198	.0940	.1185			
[illegible]				.0071						
[illegible]			.0170							
.955		.0483								

AMES 11-073(OA148) -140A/B/C/R ORB LEFT WING TOP (XE8U67)

ALPHA (4) = 7.985 BETA (1) = -3.860 MACH = .90040 Q = 600.32 P = 1057.8 RN/L = 3.5837

SECTION (1)LEFT WING TOP SURF DEPENDENT VARIABLE CP

2Y/BW	.2350	.2990	.3640	.4270	.5340	.6730	.7800	.8870	.9720	1.0000
X/CW										
.000	-.2691	-.2974	-.2790	.2164	.4918	.4673	.4228	.2998	-.5752	
.010		-.3735	-.2069		-.2625	-.1761	-.3120	-.5722		
.020		-.3107		.0000	-.3693	-.3957	-.4834	-.6761	-1.0398	
.040			-.0982	-.3818						
.041	-.2309									
.050					-.5875	-.6439	-.7473	-.8789		
.069									-1.0214	
.080					.7715					
.081				-.5408						
.086			-.0816							
.094		-.1509								
.113	-.1610									
.150					-.9831	-1.0372	-.9088	-.8405		
.157									-.8763	
.163			.0000							
.177				-.6700						
.229		-.0063								
.246			-.4312							
.247	-.0738									
.250					-1.0034	-1.0086	-.7859	-.6250		
.274				-.7656						
.345									-.4818	
.362		-.1599								
.390			-.6592							
.400					-.7639	-.7057		-.5226		
.402				-.8997						
.418										-.8391
.429	-.0029									
.497		-.5373								
.503									-.4223	
.547	-.3328									
.550					-.3668	-.5679				
.565				-.2597						
.600								-.4476		
.633	-.6814									
.637			-.0736							
.650							-.5047			
.670									-.4096	
.700		-.1220				-.4250				
.723										-.4062
.725					-.1006					
.727	-.1480									
.750							-.4201	-.3806		
.760				-.0046						
.775					.0434	-.2965				

AMES 11-073(OA148) -140A/B/C/R ORB LEFT WING TOP (XEBU67)

ALPHA (4) = 7.935 BETA (1) = -3.860

SECTION (1)LEFT WING TOP SURF DEPENDENT VARIABLE CP

2Y/BW	.2350	.2990	.3540	.4270	.5340	.6730	.7800	.8870	.9720	1.0000
X/CW										
.793	.1959									
.798			-.0274							
.808				.1842						
.834		-.0051								
.839			.1743							
.850					.1120	-.1969	-.3401			
.857				.1287						
.862									-.3480	
.865		.2184								
.879			.0955							
.900		.1108			.0978			-.3025		
.905				.0822						
.919			.0479							
.950					.0867	-.0350	-.2768			
.953				.0458						
.955			.0472							
.965		.1190								

ALPHA (4) = 7.993 BETA (2) = .182 MACH = .90040 Q = 600.32 P = 1057.8 RN/L = 3.5837

SECTION (1)LEFT WING TOP SURF DEPENDENT VARIABLE CP

2Y/BW	.2350	.2990	.3540	.4270	.5340	.6730	.7800	.8870	.9720	1.0000
X/CW										
.000	-.3499	-.4932	-.4037	.0267	.3462	.3245	.2801	.1446	-.8449	
.010		-.4941	-.2053		-.4175	-.3323	-.4808	-.7235		
.020		-.3720		.0000	-.4887	-.5196	-.6156	-.8025	-1.1290	
.040			-.0836	-.4423						
.041	-.3986									
.050					-.6641	-.7436	-.8434	-.9782		
.069									-1.1316	
.080					-.8235					
.081				-.5772						
.086			-.0765							
.094		-.2020								
.113	-.1975									
.150					-.9701	-1.0782	-.9780	-.8363		
.157									-.7992	
.163			.0000							
.177				-.6597						
.229		-.1130								
.245			-.4204							
.247	-.0814									
.250					-.9848	-1.0609	-.3730	-.6466		

AMES 11-073(OA148) -140A/B/C/R ORB LEFT WING TOP (XE8U67)

ALPHA (4) = 7.993 BETA (2) = .182

SECTION (1)LEFT WING TOP SURF DEPENDENT VARIABLE CP

2Y/BW	.2350	.2990	.3640	.4270	.5340	.6730	.7800	.8870	.9720	1.0000
X/CW										
.274				-.7346						
.345									-.5036	
.362		-.1874								
.390			-.6602							
.400					-.8677	-.7885		-.5766		
.402				-.8705						
.418										-.6436
.429	-.0066									
.497		-.5651								
.503									-.4698	
.547	-.3435									
.550					-.3983	-.5972				
.555				-.2125						
.600								-.4826		
.633	-.7024									
.637			-.1441							
.650							-.5231			
.670									-.4137	
.700		-.1121				-.4189				
.723										-.4181
.725					-.1145					
.727	-.2079									
.750							-.4616	-.4179		
.760				-.0683						
.775					.0555	-.2361				
.793	.0950									
.798			-.1105							
.808				.1278						
.834		-.0856								
.839			.1297							
.850					.0888	-.1112	-.3639			
.857				.0623						
.862									-.3668	
.865		.1303								
.879			.0793							
.900		.0590			.0524			-.3524		
.905				.0243						
.919			.0469							
.950					.0439	-.0065	-.2787			
.953				-.0067						
.955			.0387							
.965		.0833								

DATE 11 FEB 76 TABULATED PRESSURE DATA - OA148 (AMES 11-073-1)

AMES 11-073(OA148) -140A/B/C/R ORB LEFT WING TOP (XE8U67)

ALPHA (4) = 7.992 BETA (3) = 4.242 MACH = .90040 Q = 600.32 P = 1057.8 RN/L = 3.5837

SECTION (1)LEFT WING TOP SURF DEPENDENT VARIABLE CP

2Y/BW	.2350	.2990	.3640	.4270	.5340	.6730	.7800	.8870	.9720	1.0000
X/CW										
.000	-.4321	-.6079	-.2418	-.1396	.1955	.1678	.1184	-.0229	-.6852	
.010		-.3979	-.1713		-.5490	-.4921	-.6558	-.8933		
.020		-.3475		.0000	-.6187	-.6483	-.7651	-.9621	-.6438	
.040			-.1521	-.4049						
.041	-.5133									
.050					-.7148	-.8420	-.9473	-1.0591		
.059									-.5574	
.080					-.8337					
.081				-.4795						
.086			-.1666							
.094		-.3328								
.113	-.2073									
.150					-.9130	-1.1122	-1.0152	-.9602		
.157									-.5295	
.163			.0000							
.177				-.5924						
.229		-.2409								
.246			-.5303							
.247	-.0927									
.250					-.9089	-1.0921	-.8619	-.7034		
.274				-.6992						
.345									-.5023	
.352		-.1064								
.390			-.7010							
.400					-.7479	-.8084		-.5753		
.402				-.8348						
.418										-.4788
.429	-.0255									
.497		-.5362								
.503									-.4850	
.547	-.3410									
.550					-.3434	-.5878				
.565				-.2240						
.600								-.5387		
.633	-.6697									
.637			-.1902							
.650							-.5735			
.670									-.4434	
.700		-.1701				-.3734				
.723										-.4166
[illegible]					-.1256					
[illegible]	-.2447									
[illegible]							-.5053	-.4965		
[illegible]				-.2183						
[illegible]					.1165	-.1799				

AMES 11-073(OA148) -140A/B/C/R ORB LEFT WING TOP (XE8U67)

ALPHA (4) = 7.992 BETA (3) = 4.242

SECTION (1)LEFT WING TOP SURF DEPENDENT VARIABLE CP

2Y/BW	.2350	.2990	.3640	.4270	.5340	.6730	.7800	.8870	.9720	1.0000
X/CW										
.793	.0172									
.798			-.1552							
.808				-.0137						
.824		-.1493								
.839			.1059							
.850					.0416	-.1060	-.3911			
.857				-.0449						
.862									-.4072	
.865		.0595								
.879			.0444							
.900		-.0015			.0007			-.4549		
.905				-.0489						
.918			.0191							
.950					.0012	-.0015	-.2778			
.953				-.0416						
.955			.0221							
.965		.0474								

ALPHA (5) = 11.353 BETA (1) = -3.856 MACH = .89987 Q = 599.87 P = 1058.3 RN/L = 3.5762

SECTION (1)LEFT WING TOP SURF DEPENDENT VARIABLE CP

2Y/BW	.2350	.2990	.3640	.4270	.5340	.6730	.7800	.8870	.9720	1.0000
X/CW										
.000	-.2778	-.6825	-.5474	-.1631	.2338	.2237	.1641	.0142	-.7256	
.010		-.6933	-.2727		-.6941	-.6011	-.7646	-.8478		
.040		-.6022		.0000	-.8245	-.7876	-.9031	-.6972	-.6483	
.060			-.1778	-.6552						
.041	-.2740									
.070					-.9604	-.9980	-1.0493	-.6849		
.089									-.5555	
.080					-1.0559					
.091				-.7422						
.095			-.1762							
.094		-.3531								
.113	-.2707									
.150					-1.1619	-.9759	-.9990	-.6486		
.157									-.5263	
.153			.0000							
.177				-.7926						
.209		-.2311								
.245			-.5516							
.247	-.1124									
.250					-1.0156	-.8784	-.8331	-.6324		

AMES 11-073(DA148) -140A/B/C/R ORB LEFT WING TOP (XE8067)

ALPHA (B) = 11.953 BETA (D) = -3.856

SECTION (1)LEFT WING TOP SURF DEPENDENT VARIABLE CP

2Y/BW	.2350	.2990	.3640	.4270	.5340	.6730	.7800	.8870	.9720	1.0000
X/CW										
.274				-.8470						
.345									-.5149	
.352		-.3763								
.393			-.7640							
.400					-.7937	-.8039		-.5931		
.402				-.8463						
.419										-.4904
.4[illegible]	-.0290									
.407		-.7578								
.503									-.4983	
.547	-.4759									
.550					-.6885	-.6493				
.555				-.4704						
.600								-.5455		
.633	-.8220									
.637			-.2991							
.650							-.6096			
.670									-.4727	
.700		-.2039				-.5850				
.723										-.4390
.725					-.3886					
.737	-.2111									
.750							-.5809	-.5269		
.760				-.2405						
.775					-.3452	-.5174				
.793	.0739									
.799			-.2804							
.809				-.0635						
.834		-.2245								
.839			-.0733							
.850					-.2143	-.4918	-.5434			
.857				-.0907						
.862									-.4442	
.865		.0917								
.879			-.0821							
.900		.0386			-.1840			-.5005		
.905				-.1014						
.919			-.0613							
.920					-.1204	-.3843	-.5073			
.953				-.1096						
.954			-.0135							
.950		.1108								

AMES 11-073(OA148) -140A/B/C/R ORB LEFT WING TOP (XE8067)

ALPHA (5) = 11.963 BETA (2) = .189 MACH = .89987 Q = 599.87 P = 1059.3 RN/L = 3.5782

SECTION (1)LEFT WING TOP SURF DEPENDENT VARIABLE CP

2Y/BW	.2350	.2990	.3640	.4270	.5340	.6730	.7800	.8870	.9720	1.0000
X/CW										
.000	-.3894	-.7920	-.3383	-.3640	.0564	.0417	-.0104	-.1568	-.7079	
.010		-.5473	-.2803		-.8527	-.7470	-.8995	-.9061		
.020		-.5040		.0000	-.9612	-.9273	-1.0464	-.6634	-.6492	
.040			-.2832	-.5398						
.041	-.4506									
.050					-1.0624	-1.1015	-1.0734	-.6447		
.069									-.5990	
.080					-1.1149					
.081				-.6241						
.086			-.2587							
.094		-.4781								
.113	-.2733									
.150					-1.2057	-.9794	-.9976	-.6511		
.157									-.5658	
.163			.0000							
.177				-.7306						
.239		-.5715								
.246			-.5721							
.247	-.1680									
.250					-.9686	-.8980	-.8867	-.6350		
.274				-.8309						
.315									-.5525	
.332		-.2828								
.340			-.7741							
.400					-.7950	-.7860		-.6239		
.419				-.9374						
.438										-.5430
.479	-.0642									
.497		-.7317								
.503									-.5516	
.547	-.4914									
.550					-.6531	-.6973				
.556				-.3787						
.600								-.5925		
.646	-.6098									
.647			.3281							
.650							-.6437			
.670									-.5047	
.700		-.2257				-.5823				
.723										-.4915
.725					-.3443					
.727	-.2453									
.750							-.5949	-.5749		
.760				-.2622						
.775					-.2641	-.5080				

AMES 11-073.04 48: -14-7A-E/O/R DRS LEFT WING TOP (XEBLET)

ALPHA (5) = 11.953 BETA (2) = .189

SECTION (1)LEFT WING TOP SURF DEPENDENT VARIABLE CP

2Y/BW	.2350	.2990	.3540	.4270	.5340	.6730	.7800	.8870	.9720	1.0000
X/CW										
.793	.0485									
.798			-.2902							
.808				-.1891						
.834		-.2509								
.839			-.0703							
.850					-.1852	-.4909	-.5625			
.857				-.2354						
.862									-.4815	
.865		-.0042								
.879			-.0845							
.900		-.0253			-.1880			-.5226		
.905				-.2224						
.919			-.0653							
.950					-.1374	-.3551	-.5231			
.953				-.2132						
.955			-.0227							
.965		.0424								

ALPHA (5) = 11.953 BETA (3) = 4.261 MACH = .89397 Q = 599.87 P = 1058.3 PN_ = 3.5752

SECTION (1)LEFT WING TOP SURF DEPENDENT VARIABLE CP

2Y/BW	.2350	.2990	.3540	.4270	.5340	.6730	.7800	.8870	.9720	1.0000
X/CW										
.000	-.4967	-.7392	-.3516	-.5206	-.1167	-.1375	-.1939	-.3350	-.7248	
.010		-.6269	-.3338		-.9888	-.9003	-1.0186	-.7574		
.020		-.6221		.0000	-1.0781	-1.0657	-.9538	-.7636	-.6642	
.040			-.3208	-.4504						
.041	-.6071									
.060					-1.1317	-1.1454	-.8374	-.7298		
.063									-.6098	
.080					-1.1029					
.081				-.5591						
.086			-.3179							
.094		-.6177								
.113	-.2350									
.150					-1.0693	-.9785	-.7496	-.6676		
.157									-.5937	
.163			.0000							
.177				-.6632						
.239		-.5547								
.246			-.5959							
.247	-.2350									
.250					-.6953	-.8741	-.7352	-.6624		

AMES 11-073(OA148) -14OA/B/C/R ORB LEFT WING TOP

ALPHA (5) = 11.953 BETA (3) = 4.261

SECTION (11LEFT WING TOP SURF DEPENDENT VARIABLE CP

2Y/BW	.2350	.2990	.3640	.4270	.5340	.6730	.7800	.8870	.9720	1.0000
X/CW										
.274				-.7981						
.345									-.5959	
.362		-.2917								
.390			-.8016							
.400					-.6913	-.7451		-.6657		
.402				-.9008						
.418										-.5334
.429	-.0956									
.497		-.7151								
.503									-.5935	
.547	-.4693									
.560					-.5492	-.7137				
.565				-.3658						
.600								-.6251		
.633	-.8357									
.637			-.2625							
.650							-.6981			
.670									-.5594	
.700		-.1836				-.6427				
.723										-.5345
.725					-.3622					
.727	-.2252									
.750							-.6418	-.6179		
.760				-.3571						
.775					-.3348	-.5743				
.793	.0316									
.799			-.3279							
.809				-.3395						
.834		-.3026								
.839			-.1348							
.850					-.3010	-.5192	-.5975			
.857				-.4384						
.862									-.5422	
.865		-.1455								
.879			-.2007							
.900		-.1678			-.3202			-.5732		
.905				-.3446						
.919			-.1672							
.950					-.2205	-.3579	-.5461			
.953				-.2477						
.955			-.0999							
.965		-.0229								

[illegible] FEB 78 [illegible] PRESSURE [illegible] [illegible] [illegible]

AMES [illegible] [illegible] OFF LEFT WING TOP [illegible] [illegible] 78

REFERENCE DATA

SREF = 2600.0000 SQ.FT. XMRP = 1075.6900 IN. [illegible]
LREF = 474.8000 IN. YMRP = [illegible] IN. [illegible]
BREF = 936.0000 IN. ZMRP = 375.0000 IN. ZO
SCALE = .0300

PARAMETRIC DATA

RUDDER = [illegible] SPOIBRK = 55.000
SDFLAP = 22.500 [illegible] = [illegible]
ELEVN = [illegible] [illegible] = .500

ALPHA ([illegible]) = -3.934 BETA ([illegible]) = -7.0[illegible]5 MACH = .50674 Q = 533.04 P = [illegible] PHI = -.9347

SECTION ([illegible])LEFT WING TOP SURF DEPENDENT VARIABLE [illegible]

Z/BW	.2350	.2990	.3640	.4270	[illegible]	.6731	.7600	.8870	.9720	1.0000
X/CW										
.000	-.1486	-.1446	-.2987	-.1212	.1060	[illegible]135	-.0320	.0542	-[illegible].0530	
.010		-.0109	-.0515		.6027	.5944	.5770	.5255		
.020		.0255		.0000	.5554	.5471	.5235	.4665	-.[illegible]416	
.040			.1045	.3599						
.041	.0312									
.050					.3461	.3319	.3130	.2207		
.069									-.[illegible]169	
.080					.1510					
.091				.2422						
.086			.0519							
.094		.0556								
.113	.0466									
.150					-.0678	-.0743	-.0730	-.0955		
.157									-.1439	
.163			.0000							
.177				-.0080						
.289		.1459								
.2[illegible]5			.0475							
.2[illegible]	.0765									
.[illegible]10					-.1999	-.2337	-.2681	-.2931		
.[illegible]				-.1210						
.3[illegible]5									-.1079	
.3[illegible]		.1123								
.3[illegible]			-.0935							
.4[illegible]					-.1333	-.1954		-.2-66		
.4[illegible]				-.1177						
.4[illegible]										-.7617
.429	.1263									
.497		-.0599								
.503									-.1409	
.547	.0171									
.550					-.0391	-.0915				
.595				.0278						
.600								-.0990		
.623	-.0459									
.637			.0722							
.650							-.0357			
.670									-.0190	

ORIGINAL PAGE IS
OF POOR QUALITY

AMES 11-073(OA148) -140A/B/C/R ORB LEFT WING TOP (XEBU68)

ALPHA (1) = -3.934 BETA (1) = -7.845

SECTION (1)LEFT WING TOP SURF DEPENDENT VARIABLE CP

2Y/BW	.2350	.2990	.3640	.4270	.5340	.6730	.7800	.8870	.9720	1.0000
X/CW										
.700		.0967				-.0035				
.723										-1.0334
.725					.0488					
.727	.0705									
.750							.2249	.1263		
[illegible]				.0275						
.775					.2717	.1723				
.793	.2228									
.799			.0341							
.806				.2333						
.824		.0577								
.832			.2301							
.850					.1674	.1433	.1375			
.857				.1557						
.862									-.0010	
.865		.2216								
.870			.1535							
.900		.1183			.1056			.1039		
.906				.1049						
.919			.0891							
.950					.0917	.1352	.1145			
.953				.0771						
.955			.0643							
.965		.0878								

ALPHA (1) = -3.918 BETA (2) = -3.844 MACH = .59574 Q = 593.04 P = 2387.2 RN/L = [illegible]

SECTION (1)LEFT WING TOP SURF DEPENDENT VARIABLE CP

2Y/BW	.2350	.2990	.3640	.4270	.5340	.6730	.7800	.8870	.9720	1.0000
X/CW										
.000	-.1527	-.0978	-.1924	-.0620	.0799	-.0432	-.0940	-.0215	-1.0103	
.010		-.0072	-.0297		.5426	.5269	.5063	.4604		
.020		.0139		.0000	.4948	.4822	.4613	.4219	-.2121	
.040			.0896	.3188						
.041	-.0092									
.050					.3020	.2836	.2701	.2369		
.059									-.1839	
.080					.1151					
.091				.2064						
.096			.2278							
.094		.0257								
.113	.0145									
.150					-.0833	-.0933	-.0782	-.1041		

DATE 11 FEB 76 TABULATED PRESSURE DATA - OA148 (AMES 11-073-1)

AMES 11-073(OA148) -140A/B/C/R ORB LEFT WING TOP (XE8U69)

ALPHA (1) = -3.918 BETA (2) = -3.844

SECTION (1)LEFT WING TOP SURF DEPENDENT VARIABLE CP

2Y/BW	.2350	.2990	.3640	.4270	.5340	.6730	.7800	.8870	.9720	1.0000
X/CW										
.157									-.1796	
.163			.0000							
.177				-.0221						
.229		.1260								
.246			.0263							
.247	.0497									
.250					-.2167	-.2425	-.2758	-.3038		
.274				-.1338						
.345									-.1251	
.352		.0916								
.390			-.1123							
.400					-.1615	-.2104		-.2588		
.402				-.1435						
.418										-.7193
.429	.0969									
.497		-.0838								
.503									-.1391	
.547	-.0115									
.550					-.0717	-.1155				
.565				-.0091						
.600								-.1076		
.633	-.0846									
.637			.0310							
.650							-.0568			
.670									-.0176	
.700		.0613				-.0253				
.723										-1.0919
.725					.0201					
.727	.0322									
.750							.2173	.1242		
.760				-.0032						
.775					.2462	.1482				
.793	.1839									
.798			.0076							
.808				.2076						
.834		.0200								
.839			.2013							
.850					.1491	.1146	.1285			
.857				.1330						
.862									-.0079	
.865		.1870								
.879			.1303							
.900		.0859			.0889			.1039		
.905				.0852						
.919			.0658							

AMES 11-073(OA148) -140A/B/C/R ORB LEFT WING TOP (XE8U68)

ALPHA (1) = -3.918 BETA (2) = -3.844

SECTION (1)LEFT WING TOP SURF DEPENDENT VARIABLE CP

2Y/BW	.2350	.2990	.3640	.4270	.5340	.6730	.7800	.8870	.9720	1.0000
X/CW										
.950					.0762	.1263	.1143			
.953				.0597						
.955			.0506							
.965		.0643								

ALPHA (1) = -3.895 BETA (3) = .193 MACH = .59574 Q = 593.04 P = 2387.2 RN/L = 4.8347

SECTION (1)LEFT WING TOP SURF DEPENDENT VARIABLE CP

2Y/BW	.2350	.2990	.3640	.4270	.5340	.6730	.7800	.8870	.9720	1.0000
X/CW										
.000	-.1581	-.0452	-.1087	-.0037	.0739	-.0786	-.1682	-.1152	-.9353	
.010		-.0030	.0005		.4765	.4531	.4282	.3923		
.020		.0018		.0000	.4312	.4170	.3969	.3597	-.2797	
.040			.0846	.2689						
.041	-.0597									
.050					.2480	.2398	.2287	.2031		
.069									-.2342	
.080					.0837					
.081				.1667						
.086			.1905							
.094		-.0018								
.113	-.0211									
.150					-.1031	-.1078	-.0944	-.1204		
.157										
.163			.0000						-.2126	
.177				-.0409						
.229		.0988								
.246			.0046							
.247	.0281									
.250					-.2263	-.2569	-.2782	-.3030		
.274				-.1556						
.345									-.1283	
.352		.0720								
.390			-.1283							
.400					-.1819	-.2272		-.2552		
.402				-.1672						
.418										-.6581
.429	.0787									
.477		-.1061								
[illegible]									-.1413	
.547	-.0311									
[illegible]										
.565					-.1008	-.1398				
[illegible]				-.0457						

AMES 11-073(OA148) -140A/B/C/R ORB LEFT WING (XEBU68)

ALPHA (1) = -3.895 BETA (3) = .193

SECTION (1)LEFT WING TOP SURF DEPENDENT VARIABLE CP

2Y/BW	.2350	.2990	.3640	.4270	.5340	.6730	.7800	.8870	.9720	1.0000
X/CW										
.600								-.1109		
.633	-.1098									
.637			-.0075							
.650							-.0666			
.670									-.0245	
.700		.0165				-.0395				
.723										-1.1094
.725					-.0074					
.727	-.0022									
.750							.2060	.1213		
.760				-.0390						
.775					.2261	.1282				
.793	.1455									
.798			-.0290							
.808				.1797						
.834		-.0174								
.839			.1712							
.850					.1300	.0947	.1245			
.857				.1066						
.862									-.0027	
.865		.1519								
.873			.1022							
.880		.0535			.0776			.1005		
.905				.0656						
.919			.0443							
.950					.0685	.1151	.1037			
.953				.0493						
.955			.0322							
.965		.0386								

ALPHA (1) = -3.903 BETA (4) = 4.270 MACH = .59574 Q = 593.04 P = 2387.2 RN/L = 4.8347

SECTION (1)LEFT WING TOP SURF DEPENDENT VARIABLE CP

2Y/BW	.2350	.2990	.3640	.4270	.5340	.6730	.7800	.8870	.9720	1.0000
X/CW										
.000	-.1606	-.0258	-.0410	.0490	.0901	-.0673	-.1639	-.1343	-.7695	
.010		-.0038	.0258		.4122	.3850	.3634	.3201		
.020		-.0123		.0000	.3701	.3476	.3240	.2943	-.3011	
.040			.0776	.2255						
.041	-.0877									
.050					.1982	.1797	.1655	.1444		
.069									-.2620	
.080					.0493					

AMES 11-073(OA148) -140A/B/C/R ORB LEFT WING TOP (XE8UBB)

ALPHA (1) = -3.933 BETA (4) = 4.270

SECTION (1)LEFT WING TOP SURF DEPENDENT VARIABLE CP

2Y/BW	.2350	.2990	.3640	.4270	.5340	.6730	.7800	.6870	.9720	1.0000
X/CW										
.081				.1369						
.086			.1684							
.094		-.0154								
.113	-.0382									
.150					-.1226	-.1359	-.1252	-.1532		
.157									-.2328	
.163			.0000							
.177				-.0490						
.229		.0855								
.246			-.0096							
.247	.0143									
.250					-.2432	-.2707	-.2960	-.3180		
.274				-.1660						
.345									-.1432	
.362		.0613								
.390			-.1442							
.400					-.2064	-.2457		-.2688		
.402				-.1882						
.418										-.5252
.429	.0648									
.497		-.1260								
.503									-.1413	
.547	-.0463									
.550					-.1274	-.1556				
.565				-.0804						
.600								-.1175		
.633	-.1376									
.637			-.0432							
.650							-.0753			
.679									-.0279	
.700		-.0187				-.0505				
.723										-.9754
.725					-.0304					
.727	-.0464									
.750							.1968	.1142		
.760				-.0608						
.775					.2030	.1086				
.793	.1044									
.798			-.0529							
.808				.1544						
.834		-.0491								
.839			.1446							
.850					.1147	.0772	.1158			
.857				.0872						
.952									.0008	

AMES 11-073(OA148) -140A/B/C/R ORB LEFT WING TOP (XE8U58)

ALPHA (1) = -3.903 BETA (4) = 4.270

SECTION (1)LEFT WING TOP SURF DEPENDENT VARIABLE CP

2Y/BW	.2350	.2990	.3640	.4270	.5340	.6730	.7800	.8870	.9720	1.0000
X/CW										
.865		.1210								
.879			.0776							
.900		.0314			.0637			.0979		
.905				.0474						
.919			.0279							
.950					.0618	.1055	.1032			
.953				.0337						
.955			.0179							
.965		.0268								

ALPHA (1) = -3.916 BETA (5) = 8.339 MACH = .59574 Q = 593.04 P = 2387.2 RN/L = 4.8347

SECTION (1)LEFT WING TOP SURF DEPENDENT VARIABLE CP

2Y/BW	.2350	.2990	.3640	.4270	.5340	.6730	.7800	.8870	.9720	1.0000
X/CW										
.000	-.1693	-.0211	.0211	.1155	.1326	-.0464	-.1593	-.1489	-.6493	
.010		-.0136	.0441		.3475	.3176	.2890	.2501		
.020		-.0230		.0000	.3042	.2748	.2582	.2229	-.3297	
.040			.0854	.1731						
.041	-.1123									
.050					.1399	.1265	.1130	.0940		
.069									-.2915	
.080					.0095					
.081				.0910						
.085			.1455							
.094		-.0249								
.113	-.0553									
.150					-.1450	-.1535	-.1452	-.1742		
.157									-.2560	
.163			.0000							
.177				-.0674						
.229		.0720								
.245			-.0303							
.247	.0081									
.250					-.2611	-.2802	-.2972	-.3171		
.274				-.1804						
.345									-.1468	
.362		.0405								
.390			-.1603							
.400					-.2238	-.2548		-.2682		
.402				-.2078						
.419										-.3921
.429	.0547									

AMES 11-073(OA148) -140A/B/C/R ORB LEFT WING TOP (XE8U68)

ALPHA (1) = -3.916 BETA (5) = 8.339

SECTION (1)LEFT WING TOP SURF DEPENDENT VARIABLE CP

2Y/BW	.2350	.2990	.3640	.4270	.5340	.6730	.7800	.8870	.9720	1.0000
X/CW										
.497		-.1416								
.503									-.1311	
.547	-.0648									
.550					-.1539	-.1614				
.565				-.1087						
.600								-.1144		
.633	-.1620									
.637			-.0723							
.650							-.0791			
.670									-.0302	
.700		-.0510				-.0639				
.723										-.8558
.725					-.0467					
.727	-.0780									
.750							.1960	.1136		
.760				-.0808						
.775					.1884	.0984				
.793	.0761									
.798			-.0714							
.808				.1346						
.834		-.0695								
.839			.1257							
.850					.1067	.0689	.1200			
.857				.0780						
.862									.0072	
.865		.1040								
.879			.0664							
.900		.0168			.0589			.1051		
.905				.0444						
.919			.0180							
.950					.0655	.1084	.1102			
.953				.0369						
.955			.0154							
.965		.0238								

AMES 11-073(OA148) -140A/B/C/R ORB LEFT WING TOP (XE8U58)

ALPHA (2) = .067 BETA (1) = -7.888 MACH = .59556 Q = 592.68 P = 2387.2 RN/L = 4.8372

SECTION (1)LEFT WING TOP SURF DEPENDENT VARIABLE CP

2Y/BW	.2350	.2990	.3640	.4270	.5340	.6730	.7800	.8870	.9720	1.0000
X/CW										
.000	-.0675	.0458	.0572	.2858	.4788	.4490	.4163	.4678	-.2144	
.010		.0733	.1385		.4669	.5075	.4649	.3222		
.020		.0596		.0000	.3427	.3320	.2998	.2500	-.0755	
.040			.1765	.1851						
.041	-.0048									
.050					.0619	.0209	-.0020	-.0177		
.069									-.1728	
.080					-.1459					
.081				.0143						
.086			.2083							
.094		.0207								
.113	.0084									
.150					-.3134	-.3522	-.3555	-.3392		
.157									-.2713	
.163			.0000							
.177				-.2221						
.229		.0928								
.246			-.1149							
.247	.0375									
.250					-.3848	-.4462	-.4932	-.5265		
.274				-.2766						
.345									-.2490	
.362		.0010								
.390			-.2145							
.400					-.2208	-.2981		-.3605		
.402				-.2063						
.418										-.1104
.429	.0550									
.497		-.1771								
.503									-.2697	
.547	-.0928									
.550					-.0761	-.1365				
.565				-.0051						
.600								-.1354		
.633	-.1290									
.637			.0437							
.650							-.0588			
.670									-.0805	
.700		.0627				-.0101				
.723										-.2442
.725					.0430					
.727	.0344									
.750							.2069	.1068		
.760				.0388						
.775					.2640	.1747				

AMES 11-073(OA148) -140A/B/C/R ORB LEFT WING TOP (XEBUSS)

ALPHA (2) = .067 BETA (1) = -7.888

SECTION (1)LEFT WING TOP SURF DEPENDENT VARIABLE CP

2Y/BW	.2350	.2990	.3640	.4270	.5340	.6730	.7800	.8870	.9720	1.0000
X/CW										
.793	.2003									
.798			.0479							
.808				.2301						
.834		.0615								
.839			.2309							
.850					.1696	.1523	.1355			
.857				.1636						
.862									.0094	
.865		.2228								
.879			.1654							
.900		.1303			.1109			.1125		
.905				.1162						
.919			.1007							
.950					.1023	.1482	.1251			
.953				.0891						
.955			.0763							
.965		.1027								

ALPHA (2) = .076 BETA (2) = -3.860 MACH = .59556 Q = 592.68 P = 2387.2 RN/L = 4.8372

SECTION (1)LEFT WING TOP SURF DEPENDENT VARIABLE CP

2Y/BW	.2350	.2990	.3640	.4270	.5340	.6730	.7800	.8870	.9720	1.0000
X/CW										
.000	-.0959	.0337	.0679	.2846	.4475	.4073	.3784	.4153	-.2112	
.010		.0315	.1075		.3887	.4229	.3826	.2427		
.020		.0152		.0000	.2671	.2512	.2236	.1748	-.1349	
.040			.1403	.1270						
.041	-.0519									
.050					.0100	-.0266	-.0498	-.0720		
.069									-.2179	
.080					-.1826					
.081				-.0223						
.086			.1615							
.094		-.0112								
.113	-.0323									
.150					-.3294	-.3680	-.3753	-.3578		
.157									-.2830	
.163			.0000							
.177				-.2341						
.229		.0650								
.245			-.1392							
.247	.0049									
.250					-.3964	-.4481	-.4949	-.5306		

AMES 11-073(OA148) -140A/B/C/R ORB LEFT WING TOP (XEBUSB)

ALPHA (2) = .076 BETA (2) = -3.860

SECTION (1)LEFT WING TOP SURF DEPENDENT VARIABLE CP

2Y/BW	.2350	.2990	.3640	.4270	.5340	.6730	.7800	.8870	.9720	1.0000
X/CW										
.274				-.2979						
.345									-.2290	
.362		-.0247								
.390			-.2361							
.400					-.2518	-.3097		-.3627		
.402				-.2389						
.418										-.1197
.429	.0208									
.497		-.2005								
.503									-.2435	
.547	-.1236									
.550					-.1143	-.1565				
.565				-.0516						
.600								-.1408		
.633	-.1686									
.637			.0001							
.650							-.0717			
.670									-.0621	
.700		.0211				-.0326				
.723										-.2419
.725					.0139					
.727	-.0091									
.750							.2005	.1058		
.760				-.0001						
.775					.2354	.1460				
.793	.1544									
.798			.0106							
.808				.2028						
.834		.0213								
.839			.1955							
.850					.1489	.1296	.1257			
.857				.1330						
.862									.0187	
.865		.1810								
.879			.1255							
.900		.0920			.1006			.1094		
.905				.0898						
.919			.0768							
.950					.0931	.1375	.1184			
.953				.0735						
.965			.0583							
.965		.0802								

DATE 11 FEB 78 TABULATED PRESSURE DATA - 04148 (AMES 11-073-1) PAGE [illegible]

AMES 11-073(0A148) -140A/B/C/R ORB LEFT WING TOP [illegible]

ALPHA (2) = .070 BETA (3) = .177 MACH = .59556 Q = 592.65 P = [illegible] RN/L = [illegible]

SECTION (1)LEFT WING TOP SURF DEPENDENT VARIABLE CP

2Y/BW	.2350	.2930	.3640	.4270	.5340	.6730	.7800	.8870	.9720	1.0000
X/CW										
.000	-.1354	-.0021	.0539	.2719	.4183	.3600	.3297	.3459	-.2213	
.010		-.0114	.0814		.3127	.3456	.2924	.1698		
.020		-.0309		.0000	.2018	.1822	.1596	.1066	-.1839	
.040			.1047	.0741						
.041	-.1039									
.050					-.0408	-.0660	-.0939	-.1074		
.069									-.2467	
.080					-.2116					
.081				-.0563						
.096			.1258							
.094		-.0411								
.113	-.0656									
.150					-.3373	-.3710	-.3750	-.3611		
.157									-.2773	
.163			.0000							
.177				-.2454						
.229		.0413								
.246			-.1617							
.247	-.0147									
.250					-.4080	-.4529	-.4894	-.5131		
.274				-.3092						
.345									-.2118	
.362		-.0439								
.390			-.2577							
.400					-.2700	-.3227		-.3583		
.402				-.2551						
.418										-.1251
.449	.0102									
.497		-.2247								
.503									-.2135	
.517	-.1416									
.550					-.1457	-.1806				
.565				-.0880						
.600								-.1409		
.630	-.2000									
.637			-.0429							
.650							-.0892			
.670									-.0425	
.700		-.0237				-.0494				
.723										-.2477
.725					-.0121					
.727	-.0465									
.750							.1969	.1023		
.760				-.0324						
.775					.2096	.1234				

AMES 11-073(OA149) -140A/B/C/R ORB LEFT WING TOP (XE3J33)

ALPHA (2) = .078 BETA (3) = .177

SECTION (1)LEFT WING TOP SURF DEPENDENT VARIABLE CP

2Y/BW	.2350	.2990	.3640	.4270	.5340	.6730	.7800	.8870	.9720	1.0000
X/CW										
.793	.1125									
.798			-.0228							
.808				.1690						
.834		-.0140								
.839			.1580							
.850					.1277	.1018	.1151			
.857				.1049						
.862									.0255	
.865		.1352								
.879			.1021							
.900		.0546			.0832			.1068		
.905				.0693						
.919			.0489							
.950					.0778	.1282	.1129			
.953				.0500						
.955			.0340							
.965		.0483								

ALPHA (2) = .074 BETA (4) = 4.252 MACH = .59556 Q = 592.69 P = 2387.2 RN/L = 4.8372

SECTION (1)LEFT WING TOP SURF DEPENDENT VARIABLE CP

2Y/BW	.2350	.2990	.3640	.4270	.5340	.6730	.7800	.8870	.9720	1.0000
X/CW										
.000	-.1676	-.0446	.0264	.2455	.3864	.3331	.2966	.3054	-.1947	
.010		-.0638	.0516		.2270	.2540	.2060	.0789		
.020		-.0526		.0000	.1230	.1050	.0677	.0148	-.2336	
.040			.0773	.0256						
.041	-.1326									
.050					-.0924	-.1222	-.1539	-.1848		
.069									-.2849	
.080					-.2390					
.081				-.0875						
.086			.0977							
.094		-.0626								
.113	-.0850									
.150					-.3470	-.3923	-.3846	-.3905		
.157									-.2922	
.163			.0000							
.177				-.2533						
.229		.0268								
.245			-.1675							
.247	-.0286									
.250					-.4140	-.4609	-.4931	-.5147		

DATE 1: FEB 73 TABULATED PRESSURE DATA - OA148 (AMES 11-073-1) PAGE 1033

AMES 11-073(OA148) -140A/B/C/R OP3 LEFT WING TOP [illegible]

ALPHA (2) = .074 BETA (4) = 4.252

SECTION (1)LEFT WING TOP SURF DEPENDENT VARIABLE CP

2Y/BW	.2350	.2990	.3640	.4270	.5340	.6730	.7800	.8970	.9720	1.0000
X/CW										
.274				-.3162						
.345									-.2061	
.362		-.0534								
.390			-.2610							
.400					-.2957	-.3418		-.3535		
.402				-.2847						
.418										-.1343
.429	-.0007									
.497		-.2370								
.503									-.1975	
.547	-.1496									
.560					-.1724	-.1972				
.565				-.1194						
.600								-.1350		
.633	-.2247									
.637			-.0795							
.650							-.0921			
.670									-.0274	
.700		-.0576				-.0615				
.723										-.1805
.725					-.0363					
.727	-.0818									
.750							.1902	.1099		
.760				-.0573						
.775					.1841	.1045				
.793	.0762									
.798			-.0535							
.808				.1413						
.834		-.0467								
.839			.1280							
.850					.1126	.0866	.1162			
.857				.0831						
.862									.0405	
.865		.0950								
.879			.0778							
.900		.0256			.0663			.1099		
.905				.0507						
.919			.0274							
.950					.0713	.1202	.1142			
.953				.0452						
.955			.0191							
.905		.0205								

AMES 11-073(OA148) -140A/B/C/R ORB LEFT WING TOP (XEEL38)

ALPHA (2) = .059 BETA (5) = 8.307 MACH = .59556 Q = 592.69 P = 2327.2 RN/L = 4.8372

SECTION (1)LEFT WING TOP SURF DEPENDENT VARIABLE CP

2Y/BW	.2350	.2990	.3640	.4270	.5340	.6730	.7800	.8870	.9720	1.0000
X/CW										
.000	-.2171	-.1276	-.0373	.1968	.3531	.2936	.2573	.2470	-.2044	
.010		-.1288	.0010		.1249	.1696	.1130	-.0094		
.020		-.1122		.0000	.0379	.0223	-.0026	-.0695	-.2735	
.040			.0361	-.0321						
.041	-.1688									
.050					-.1454	-.1776	-.1937	-.2404		
.069									-.3108	
.080					-.2836					
.081				-.1184						
.086			.0528							
.094		-.0719								
.113	-.1070									
.150					-.3694	-.4072	-.3938	-.4001		
.157									-.2975	
.163			.0000							
.177				-.2622						
.229		.0129								
.246			-.1762							
.247	-.0379									
.250					-.4199	-.4671	-.4945	-.5071		
.274				-.3234						
.345									-.1854	
.352		-.0626								
.390			-.2689							
.400					-.3100	-.3485		-.3462		
.402				-.3000						
.418										-.1603
.429	-.0066									
.497		-.2461								
.503									-.1703	
.547	-.1674									
.550					-.1968	-.2109				
.565				-.1495						
.600								-.1277		
.633	-.2455									
.637			-.1128							
.650							-.0958			
.670									-.0139	
.700		- 0946				-.0754				
.723										-.1404
.725					-.0581					
.727	-.1166									
.750							.1864	.1151		
.760				-.0680						
.775					.1638	.0876				

AMES 11-073(OA148) -140A/B/C/R ORB LEFT WING TOP (XE2C33)

ALPHA (2) = .059 BETA (5) = 8.307

SECTION (1)LEFT WING TOP SURF DEPENDENT VARIABLE CP

2Y/BW	.2350	.2990	.3540	.4270	.5340	.6730	.7800	.8870	.9720	1.0000
X/CW										
.793	.0390									
.798			-.0699							
.808				.1127						
.834		-.0764								
.839			.1030							
.850					.0937	.0712	.1151			
.857				.0629						
.862									.0531	
.865		.0720								
.879			.0472							
.900		.0046			.0568			.1149		
.905				.0379						
.919			.0105							
.950					.0643	.1128	.1145			
.953				.0339						
.955			.0053							
.955		.0084								

ALPHA (3) = 4.022 BETA (1) = -7.901 MACH = .59644 Q = 594.20 P = 2386.1 RN/L = 4.8446

SECTION (1)LEFT WING TOP SURF DEPENDENT VARIABLE CP

2Y/BW	.2350	.2990	.3540	.4270	.5340	.6730	.7800	.8870	.9720	1.0000
X/CW										
.000	-.0411	.0547	.1075	.4017	.6061	.5915	.5713	.5232	-.0431	
.010		.0022	.1018		.1050	.1474	.0393	-.2225		
.020		-.0152		.0000	-.0535	-.1055	-.1779	-.2973	-.3993	
.040			.1039	-.1039						
.041	-.0458									
.050					-.3394	-.4353	-.4884	-.5455		
.069									-.4859	
.080					-.5291					
.081				-.2800						
.086			.0696							
.094		-.0453								
.113	-.0293									
.150					-.5937	-.6949	-.7160	-.6666		
.157									-.5869	
.163			.0000							
.177				-.4499						
.229		.0193								
.246			-.3061							
.247	-.0012									
.250					-.5701	-.6669	-.7452	-.7823		

AMES 11-073(OA148) -140A/B/C/R ORB LEFT WING TOP (XE8U58)

ALPHA (3) = 4.022 BETA (1) = -7.901

SECTION (1)LEFT WING TOP SURF DEPENDENT VARIABLE CP

2Y/BW	.2350	.2990	.3640	.4270	.5340	.6730	.7800	.8870	.9720	1.0000
X/CW										
.274				-.4402						
.345									-.5285	
.362		-.1278								
.390			-.3431							
.400					-.2981	-.3867		-.4693		
.402				-.2804						
.418										-.2897
.429	-.0099									
.497		-.2943								
.503									-.4869	
.547	-.2116									
.550					-.1002	-.1684				
.565				-.0268						
.600								-.1894		
.633	-.2156									
.637			.0210							
.650							-.0728			
.670									-.2442	
.700		.0309				-.0085				
.723										-.2511
.725					.0502					
.727	-.0004									
.750							.1954	.0855		
.760				.0648						
.775					.2444	.1730				
.793	.2011									
.798			.0686							
.808				.2229						
.834		.0763								
.839			.2279							
.850					.1744	.1680	.1336			
.857				.1667						
.862									-.0653	
.865		.2198								
.879			.1707							
.900		.1498			.1261			.1105		
.905				.1275						
.919			.1157							
.950					.1184	.1718	.1356			
.953				.1057						
.955			.0917							
.965		.1185								

DATE 11 FEB 76 TABULATED PRESSURE DATA - OA148 (AMES 11-073-1) PAGE -330

AMES 11-073(OA148) -140A/B/C/R ORB LEFT WING TOP (XE8U66)

ALPHA (3) = 4.025 BETA (2) = -3.862 MACH = .59644 Q = 594.20 P = 2386.1 PN/L = 4.2443

SECTION (1)LEFT WING TOP SURF DEPENDENT VARIABLE CP

2Y/BW	.2350	.2990	.3640	.4270	.5340	.6730	.7800	.8870	.9720	1.0000
X/CW										
.000	-.1005	-.0337	.0165	.3187	.5279	.5069	.4837	.4155	-.1481	
.010		-.0870	.0224		-.0023	.0251	-.0872	-.3245		
.020		-.0889		.0000	-.1462	-.1934	-.2707	-.4101	-.4715	
.040			.0359	-.1813						
.041	-.1017									
.050					-.3959	-.4943	-.5545	-.5826		
.069									-.5389	
.080					-.5726					
.081				-.3271						
.086			.0148							
.094		-.0903								
.113	-.0743									
.150					-.6142	-.7058	-.7341	-.6921		
.157									-.5978	
.163			.0000							
.177				-.4708						
.229		-.0084								
.246			-.3315							
.247	-.0370									
.250					-.5863	-.6856	-.7421	-.7792		
.274				-.4625						
.345									-.4942	
.362		-.1571								
.390			-.3719							
.400					-.3370	-.4068		-.4620		
.402				-.3203						
.418										-.4156
.429	-.0424									
.497		-.3256								
.503									-.4620	
.547	-.2504									
.550					-.1349	-.1965				
.565				-.0760						
.600								-.1855		
.633	-.2599									
.637			-.0268							
.650							-.0891			
.670									-.2354	
.700		-.0212				-.0309				
.723										-.2938
.725					.0180					
.727	-.0522									
.750							.1907	.0840		
.760				.0248						
.775					.2122	.1400				

AMES 11-073(OA148) -140A/B/C/R ORB LEFT WING TOP (XE8U68)

ALPHA (3) = 4.025 BETA (2) = -3.862

SECTION (1)LEFT WING TOP SURF DEPENDENT VARIABLE CP

2Y/BW	.2350	.2990	.3640	.4270	.5340	.6730	.7800	.8870	.9720	1.0000
X/CW										
.793	.1557									
.798			.0315							
.808				.1847						
.834		.0326								
.839			.1890							
.850					.1442	.1367	.1263			
.857				.1370						
.862									-.0823	
.865		.1659								
.879			.1373							
.900		.1058			.1073			.1125		
.905				.1001						
.919			.0860							
.950					.0989	.1557	.1292			
.953				.0815						
.955			.0707							
.965		.0945								

ALPHA (3) = 4.023 BETA (3) = .182 MACH = .59644 Q = 594.20 P = 2386.1 RN/L = 4.8446

SECTION (1)LEFT WING TOP SURF DEPENDENT VARIABLE CP

2Y/BW	.2350	.2990	.3640	.4270	.5340	.6730	.7800	.8870	.9720	1.0000
X/CW										
.000	-.1644	-.1401	-.0946	.2248	.4436	.4195	.3941	.3175	-.2402	
.010		-.1794	-.0659		-.0952	-.0523	-.1795	-.3954		
.020		-.1619		.0000	-.2191	-.2726	-.3472	-.4594	-.5241	
.040			-.0213	-.2332						
.041	-.1462									
.050					-.4382	-.5190	-.5803	-.5939		
.069									-.5407	
.080					-.5840					
.081				-.3519						
.086			-.0246							
.094		-.1160								
.113	-.1048									
.150					-.6081	-.6913	-.7210	-.6730		
.157									-.5656	
.163			.0000							
.177				-.4723						
.229		-.0288								
.245			-.3481							
.247	-.0593									
.250					-.5878	-.6751	-.7235	-.7468		

AMES 11-073(OA148) -140A/B/C/R ORB LEFT WING TOP (XESCES)

ALPHA (3) = 4.023 BETA (3) = .182

SECTION (1)LEFT WING TOP SURF DEPENDENT VARIABLE CP

2Y/BW	.2350	.2930	.3640	.4270	.5340	.6730	.7800	.8870	.9720	1.0000
X/CW										
.274				-.4619						
.345										
.362		-.1659							-.4451	
.390			-.3748							
.400					-.3472	-.4216		-.4481		
.402				-.3430						
.418										
.429	-.0614									-.5166
.497		-.3376								
.503										
.547	-.2669								-.4030	
.550										
.565					-.1686	-.2147				
.600				-.1110						
.633	-.2888							-.1764		
.637			-.0718							
.650										
.670							-.1005			
.700		-.0620							-.1604	
.723						-.0483				
.725										-.2991
.727	-.0912				-.0103					
.750										
.760							.1841	.0888		
.775				-.0008						
.793	.1135				.1848	.1152				
.799			-.0105							
.808										
.834		-.0087		.1438						
.839										
.850			.1483							
.857					.1230	.1110	.1201			
.862				.1091						
.865		.1182							-.0262	
.879										
.900		.0678	.1002							
.905					.0859			.1103		
.919				.0749						
.950			.0596							
.953					.0838	.1397	.1288			
.955				.0635						
.965		.0623	.0439							

AMES 11-073(0A148) -140A/B/C/R ORB LEFT WING TOP (XE6J68)

ALPHA (3) = 4.027 BETA (4) = 4.243 MACH = .59544 Q = 594.20 P = 2396.1 RN/L = 4.5446

SECTION (1)LEFT WING TOP SURF DEPENDENT VARIABLE CP

2Y/BW	.2350	.2990	.3640	.4270	.5340	.6730	.7800	.8870	.9720	1.0000
X/CW										
.000	-.2330	-.2644	-.2250	.1044	.3394	.3131	.2780	.1877	-.4252	
.010		-.2715	-.1531		-.2209	-.1903	-.3182	-.5597		
.020		-.2239		.0000	-.3191	-.3787	-.4766	-.6045	-.6134	
.040			-.0739	-.2938						
.041	-.1935									
.050					-.4933	-.5923	-.6523	-.6786		
.069									-.6084	
.080					-.6193					
.081				-.3784						
.086			-.0696							
.094		-.1330								
.113	-.1399									
.150					-.6145	-.7065	-.7386	-.6947		
.157									-.6821	
.163			.0000							
.177				-.4759						
.229		-.0472								
.246			-.3433							
.247	-.0789									
.250					-.5952	-.6747	-.7320	-.7466		
.274				-.4691						
.345									-.4274	
.362		-.1751								
.390			-.3761							
.400					-.3685	-.4293		-.4521		
.402				-.3607						
.418										-.7613
.429	-.0725									
.497		-.3565								
.503									-.3781	
.547	-.2793									
.550					-.1945	-.2247				
.555				-.1541						
.600								-.1723		
.633	-.3131									
.637			-.1336							
.650							-.1064			
.670									-.1415	
.700		-.0996				-.0692				
.723										-.3242
.725					-.0311					
.727	-.1152									
.750							.1777	.0974		
.760				-.0438						
.775					.1395	.0832				

AMES 11-073(OA148) -140A/B/C/R ORB LEFT WING TOP (XEBUSB)

ALPHA (3) = 4.027 BETA (4) = 4.243

SECTION (1)LEFT WING TOP SURF DEPENDENT VARIABLE CP

2Y/BW	.2350	.2990	.3640	.4270	.5340	.6730	.7800	.8870	.9720	1.0000
X/CW										
.793	.0747									
.798			-.0559							
.608				.0867						
.834		-.0581								
.839			.1283							
.850					.0967	.0908	.1131			
.857				.0643						
.852									-.0071	
.855		.0953								
.873			.0747							
.900		.0319			.0710			.1118		
.905				.0396						
.919			.0336							
.950					.0762	.1233	.1211			
.953				.0382						
.955			.0246							
.965		.0273								

ALPHA (3) = 4.033 BETA (5) = 8.290 MACH = .59644 Q = 594.20 P = 2386.1 RN/L = 4.8445

SECTION (1)LEFT WING TOP SURF DEPENDENT VARIABLE CP

2Y/BW	.2350	.2990	.3640	.4270	.5340	.6730	.7800	.8870	.9720	1.0000
X/CW										
.000	-.3134	-.4136	-.2484	-.0551	.2151	.1895	.1474	.0546	-.5998	
.010		-.3296	-.1338		-.3394	-.3279	-.4397	-.6701		
.020		-.2438		.0000	-.4175	-.4680	-.5582	-.6970	-.6575	
.040			-.1153	-.3251						
.041	-.2400									
.050					-.5480	-.6240	-.6925	-.7279		
.069									-.6334	
.080					-.6381					
.091				-.3873						
.086			-.1291							
.094		-.2372								
.113	-.1780									
.150					-.6122	-.6984	-.7127	-.6913		
.157									-.5410	
.163			.0000							
.177				-.4443						
.229		-.0397								
.246			-.4103							
.247	-.0837									
.250					-.5799	-.6566	-.7045	-.7168		

AMES 11-073(OA148) -140A/B/C/R ORB LEFT WING TOP (XE8U58)

ALPHA (3) = 4.033 BETA (5) = 8.290

SECTION (1)LEFT WING TOP SURF DEPENDENT VARIABLE CP

2Y/BW	.2350	.2990	.3640	.4270	.5340	.6730	.7800	.8870	.9720	1.0000
X/CW										
.274				-.4537						
.345										
.362		-.1655							-.3805	
.390			-.3840							
.400										
.402					-.3815	-.4381		-.4354		
.418				-.3739						
.429	-.0752									-.9219
.497		-.3618								
.503										
.547	-.2836								-.3438	
.550										
.565					-.2177	-.2455				
.600				-.2239						
.633	-.3282							-.1627		
.637			-.1341							
.650										
.670							-.1191			
.700		-.1315							-.1037	
.723						-.0830				
.725										-.2982
.727	-.1461				-.0578					
.750										
.760							.1690	.0952		
.775				-.1158						
.793	.0317				.0644	.0585				
.793			-.0702							
.808				.0873						
.834		-.0901								
.839										
.850			.0948							
.857					.0797	.0668	.1048			
.862				.0607						
.865		.0506							.0161	
.879			.0465							
.900		.0059								
.905					.0514			.1052		
.919				.0417						
.950			.0114							
.953					.0612	.1056	.1084			
.955				.0408						
.965			.0092							
		.0076								

DATE 11 FEB 76 TABULATED PRESSURE DATA - OA148 (AMES 11-073-1) PAGE 999

AMES 11-073(OA148) -140A/B/C/R ORB LEFT WING TOP (XE3JBB)

ALPHA (4) = 7.992 BETA (1) = -7.890 MACH = .59642 Q = 594.33 P = 2398.8 RN/L = 4.3439

SECTION (1)LEFT WING TOP SURF DEPENDENT VARIABLE CP

2Y/BW	.2350	.2990	.3640	.4270	.5340	.6730	.7800	.8870	.9720	1.0000
X/CW										
.000	-.0686	-.1319	-.1736	.1876	.4005	.3455	.2682	.0755	-.6185	
.010		-.2285	-.1781		-.5465	-.5489	-.7970	-1.2160		
.020		-.2053		.0000	-.6634	-.7988	-.9702	-1.2616	-1.2095	
.040			-.1406	-.5270						
.041	-.0922									
.050					-.8963	-1.0732	-1.2082	-1.3091		
.069									-1.1549	
.080					-1.0447					
.081				-.6723						
.086			-.1651							
.094		-.1463								
.113	-.0741									
.150					-.9449	-1.0970	-1.1453	-1.0759		
.157									-1.1808	
.163			.0000							
.177				-.7179						
.229		-.0658								
.246			-.5214							
.247	-.0552									
.250					-.7552	-.8683	-.9890	-1.0772		
.274				-.5946						
.345									-.9431	
.362		-.2631								
.390			-.4434							
.400					-.3563	-.4692		-.6202		
.402				-.3383						
.418										-1.3137
.429	-.1023									
.497		-.4292								
.503									-.8356	
.547	-.3472									
.550					-.0904	-.1905				
.565				-.0692						
.600								-.2708		
.633	-.3173									
.637			-.0483							
.650							-.1076			
.670									-.6121	
.700		-.0153				-.0074				
.723										-1.0248
.725					.0653					
.727	-.0149									
.750							.1687	.0235		
.760				.0240						
.775					.1856	.1512				

AMES 11-073(OA148) -140A/B/C/R ORB LEFT WING TOP (XEBU68)

ALPHA (4) = 7.982 BETA (1) = -7.890

SECTION (1)LEFT WING TOP SURF DEPENDENT VARIABLE CP

2Y/BW	.2350	.2990	.3640	.4270	.5340	.6730	.7800	.8870	.9720	1.0000
X/CW										
.793	.2423									
.798			.0566							
.808				.1472						
.834		.0753								
.839			.2283							
.850					.1664	.1713	.1151			
.857				.1406						
.862									-.3818	
.865		.1949								
.879			.1749							
.900		.1647			.1299			.0689		
.905				.1190						
.919			.1238							
.950					.1149	.1774	.1215			
.953				.1068						
.955			.1064							
.965		.1302								

ALPHA (4) = 7.993 BETA (2) = -3.860 MACH = .59642 Q = 594.33 P = 2385.8 RN/L = 4.8439

SECTION (1)LEFT WING TOP SURF DEPENDENT VARIABLE CP

2Y/BW	.2350	.2990	.3640	.4270	.5340	.6730	.7800	.8870	.9720	1.0000
X/CW										
.000	-.1605	-.2991	-.3574	.0162	.2535	.1997	.1119	-.0982	-.8889	
.010		-.3588	-.3182		-.6821	-.7011	-.9641	-1.3883		
.020		-.3087		.0000	-.7623	-.9092	-1.1099	-1.4090	-1.3239	
.040			-.2200	-.6040						
.041	-.1525									
.050					-.9527	-1.1331	-1.2737	-1.3852		
.069									-1.2001	
.080					-1.0705					
.081				-.7047						
.095			-.2235							
.094		-.1849								
.113	-.1294									
.150					-.9380	-1.0991	-1.1517	-1.0807		
.157									-1.1807	
.163			.0000							
.177				-.7252						
.241		-.0982								
.246			-.5320							
.247	-.0895									
.250					-.7699	-.8876	-.9591	-1.0615		

DATE 11 FEB 76 TABULATED PRESSURE DATA - OA148 (AMES 11-073-1) PAGE -888

AMES 11-073(OA148) -140A/B/C/R ORB LEFT WING TOP (XEB068)

ALPHA (4) = 7.993 BETA (2) = -3.860

SECTION (1)LEFT WING TOP SURF DEPENDENT VARIABLE CP

2Y/BW	.2350	.2990	.3640	.4270	.5340	.6730	.7800	.8870	.9720	1.0000
X/CW										
.274				-.6122						
.345										
.362		-.2894							-.8941	
.390			-.4655							
.400					-.3833	-.4897		-.6135		
.402				-.3679						
.418										
.429	-.1258									-1.6122
.497		-.4718								
.503										
.547	-.3711								-.7843	
.550										
.565					-.1270	-.2144				
.600				-.1271						
.633	-.3455							-.2695		
.637			-.0918							
.650										
.670							-.1227			
.700		-.0862							-.6231	
.723						-.0317				
.725										-1.0971
.727	-.0695				.0284					
.750										
.760							.1621	.0275		
.775				-.0155						
.793	.1744				.1098	.1068				
.798			-.0139							
.808				.1318						
.834		.0419								
.839			.1600							
.850										
.857					.1096	.1378	.1037			
.862				.1125						
.865		.1950							-.4662	
.879			.1193							
.900		.1286								
.905					.0790			.0651		
.919				.0865						
.950			.0784							
.953					.0745	.1568	.1172			
.955				.0808						
.965			.0699							
		.1042								

AMES 11-073(OA148) -140A/B/C/R 098 LEFT WING TOP (XERU588)

ALPHA (4) = 7.991 BETA (3) = .185 MACH = .59542 Q = 594.33 P = 2385.8 RN/L = 9.8439

SECTION (1)LEFT WING TOP SURF DEPENDENT VARIABLE CP

2Y/BW	.2350	.2930	.3640	.4270	.5340	.6730	.7800	.8870	.9720	1.0000
X/CW										
.000	-.2492	-.4821	-.5397	-.1675	.1144	.0645	-.0334	-.2432	-1.1107	
.010		-.4847	-.3873		-.7935	-.8161	-1.0792	-1.4552		
.020		-.3742		.0000	-.8476	-.9931	-1.1857	-1.4659	-1.3672	
.040			-.2353	-.6295						
.041	-.2129									
.053					-.9811	-1.1536	-1.3003	-1.3720		
.069									-1.1840	
.080					-1.0600					
.081				-.7005						
.086			-.2121							
.094		-.2097								
.113	-.1865									
.150					-.9067	-1.0655	-1.1289	-1.0137		
.157									-1.0501	
.163			.0000							
.177				-.6979						
.229		-.1683								
.246			-.5176							
.247	-.1042									
.250					-.7503	-.8659	-.9482	-1.0248		
.274				-.5928						
.345									-.7977	
.362		-.3319								
.390			-.4846							
.400					-.3956	-.4906		-.5876		
.402				-.4080						
.418										-1.8451
.429	-.1322									
.497		-.4918								
.503									-.7059	
.547	-.3954									
.550					-.1800	-.2235				
.565				-.1867						
.600								-.2544		
.633	-.3716									
.637			-.1750							
.650							-.1302			
.670									-.5401	
.700		-.0660				-.0457				
.723										-1.0440
.725					-.0211					
.727	-.1163									
.750							.1569	.0401		
.760				-.0464						
.775					.0522	.0712				

AMES 11-073(04148) -140A/B/C/R ORB LEFT WING TOP REDUCED

ALPHA (4) = 7.991 BETA (3) = .185

SECTION (1)LEFT WING TOP SURF DEPENDENT VARIABLE CP

X/CW \ 2Y/BW	.2350	.2990	.3640	.4270	.5340	.6730	.7800	.8870	.9720	1.0000
.793	.1131									
.798			-.0506							
.808				.0963						
.834		-.0154								
.839			.1667							
.850					.0771	.1060	.0989			
.857				.0571						
.862									-.4392	
.865		.1445								
.879			.1189							
.900		.0758			.0560			.0588		
.905				.0213						
.919			.0779							
.950					.0765	.1397	.1057			
.953				.0216						
.955			.0675							
.965		.0664								

ALPHA (4) = 7.992 BETA (4) = 4.234 MACH = .59642 Q = 534.33 P = 2326.8 PN/L = 4.8439

SECTION (1)LEFT WING TOP SURF DEPENDENT VARIABLE CP

X/CW \ 2Y/BW	.2350	.2990	.3640	.4270	.5340	.6730	.7800	.8870	.9720	1.0000
.000	-.3496	-.6268	-.5224	-.3421	-.0497	-.1051	-.2299	-.4631	-1.5165	
.010		-.4987	-.2652		-.9110	-.9617	-1.2447	-1.6512		
.020		-.3508		.0000	-.9172	-1.0975	-1.2904	-1.6564	-1.5227	
.040			-.2413	-.6128						
.041	-.27[illegible]2									
.050					-.9906	-1.1792	-1.3315	-1.4667		
.069									-1.2269	
.080					-1.0436					
.081				-.6356						
.086			-.2572							
.094		-.3922								
.113	-.2230									
.150					-.8819	-1.0284	-1.0685	-1.0281		
.157									-1.0349	
.163			.0000							
.177				-.6272						
.229		-.2107								
.245			-.6136							
.247	-.1104									
.250					-.7294	-.8523	-.9228	-.9857		

AMES 11-073(OA148) -140A/B/C/R ORB LEFT WING TOP (XEB/SB)

ALPHA (4) = 7.932 BETA (4) = 4.234

SECTION (1)LEFT WING TOP SURF DEPENDENT VARIABLE CP

2Y/BW	.2350	.2990	.3640	.4270	.5340	.6730	.7800	.8870	.9720	1.0000
X/CW										
.274				-.5938						
.345									-.7761	
.362		-.2492								
.390			-.6243							
.400					-.4137	-.4872		-.5609		
.402				-.4215						
.418										-2.2363
.429	-.1434									
.497		-.4694								
.503									-.6811	
.547	-.4123									
.550					-.2496	-.2309				
.565				-.2222						
.600								-.2489		
.633	-.3887									
.637			-.1492							
.650							-.1369			
.670									-.5476	
.700		-.1124				-.0735				
.723										-.9717
.725					-.0605					
.727	-.1499									
.750							.1196	.0420		
.760				-.1550						
.775					.0928	.0185				
.793	.0603									
.798			-.0717							
.808				.0330						
.834		-.0573								
.839			.1291							
.850					.1096	.0521	.0811			
.857				.0214						
.862									-.3881	
.865		.0811								
.879			.0772							
.900		.0346			.0746			.0614		
.905				.0193						
.919			.0358							
.950					.0862	.0970	.0900			
.953				.0356						
.955			.0329							
.965		.0278								

AMES 11-073(OA148) -140A/B/C/R ORB LEFT WING TOP (XE8U68)

ALPHA (4) = 7.990 BETA (5) = 8.288 MACH = .59642 Q = 594.33 P = 2386.8 RN/L = 4.8439

SECTION (1)LEFT WING TOP SURF DEPENDENT VARIABLE CP

2Y/BW	.2350	.2990	.3640	.4270	.5340	.6730	.7800	.8870	.9720	1.0000
X/CW										
.000	-.4558	-.7047	-.3681	-.4849	-.2395	-.2995	-.4281	-.6732	-1.8727	
.010		-.4072	-.3120		-1.0344	-1.1087	-1.3979	-1.7399		
.020		-.4006		.0000	-.9977	-1.1733	-1.3733	-1.7492	-1.4625	
.040			-.3257	-.4964						
.041	-.3784									
.050					-.9826	-1.1776	-1.3459	-1.4737		
.069									-1.1808	
.080					-.9906					
.081				-.5724						
.086			-.3506							
.094		-.4134								
.113	-.2232									
.150					-.8193	-.9877	-1.0333	-.9982		
.157									-.9469	
.163			.0000							
.177				-.6004						
.229		-.3139								
.246			-.7778							
.247	-.1416									
.250					-.6589	-.8129	-.8763	-.9237		
.274				-.5913						
.345									-.7371	
.362		-.2264								
.390			-.5240							
.400					-.4587	-.4617		-.5229		
.402				-.5701						
.418										-1.9232
.429	-.1532									
.497		-.4649								
.503									-.6695	
.547	-.4029									
.550					-.2466	-.2438				
.565				-.3437						
.600								-.2226		
.633	-.3963									
.637			-.1596							
.650							-.1248			
.670									-.4278	
.700		-.1480				-.0964				
.723										-.7125
.725					-.0694					
.727	-.1737									
.750							.0773	.0446		
.760				-.1418						
.775					.0404	-.0070				

AMES 11-073(OA148) -140A/B/C/R ORB LEFT WING TOP (XE8U68)

ALPHA (4) = 7.990 BETA (5) = 8.288

SECTION (1)LEFT WING TOP SURF DEPENDENT VARIABLE CP

2Y/BW	.2350	.2990	.3640	.4270	.5340	.6730	.7800	.8870	.9720	1.0000
X/CW										
.793	.0049									
.798			-.0842							
.802				.0827						
.834		-.0950								
.839			.0959							
.850					.0075	.0156	.0761			
.857				.0568						
.862									-.2404	
.865		.0479								
.879			.0502							
.900		-.0005			-.0478			.0564		
.905				.0395						
.919			.0167							
.950					-.0453	.1037	.0768			
.953				.0511						
.955			.0143							
.965		.0124								

ALPHA (5) = 11.959 BETA (1) = -7.852 MACH = .59656 Q = 594.57 P = 2386.7 RN/L = 4.8403

SECTION (1)LEFT WING TOP SURF DEPENDENT VARIABLE CP

2Y/BW	.2350	.2990	.3640	.4270	.5340	.6730	.7800	.8870	.9720	1.0000
X/CW										
.000	-.1562	-.5054	-.7689	-.3424	-.0958	-.2129	-.3480	-.6391	-1.7804	
.010		-.6086	-.6413		-1.4929	-1.5304	-1.9727	-2.4017		
.020		-.4691		.0000	-1.4686	-1.7661	-2.1016	-2.5066	-2.5085	
.040			-.4833	-1.0456						
.041	-.1489									
.050					-1.5887	-1.8847	-2.2412	-2.4410		
.069									-2.3013	
.080					-1.6829					
.081				-1.0929						
.086			-.4301							
.094		-.2223								
.113	-.1647									
.150					-1.2270	-1.3386	-1.2876	-1.2510		
.157									-1.7121	
.163			.0000							
.177				-.9283						
.229		-.1989								
.246			-.6685							
.247	-.0859									
.250					-.8857	-1.0668	-1.1656	-1.3470		

AMES 11-073(OA148) -140A/B/C/R ORB LEFT WING TOP (XEBU29)

ALPHA (5) = 11.959 BETA (1) = -7.852

SECTION (1)LEFT WING TOP SURF DEPENDENT VARIABLE CP

2Y/BW	.2350	.2990	.3640	.4270	.5340	.6730	.7800	.8870	.9720	1.0000
X/CW										
.274				-.6753						
.345									-1.5475	
.362		-.4712								
.390			-.6045							
.400					-.3493	-.4936		-.7456		
.402				-.4357						
.418										-1.8405
.429	-.1875									
.497		-.7029								
.503									-1.3507	
.547	-.4854									
.550					-.1418	-.1695				
.565				-.2002						
.600								-.4157		
.633	-.3977									
.637			-.0833							
.650							-.1418			
.670									-.9069	
.700		-.0796				-.0284				
.723										-1.3645
.725					-.0095					
.727	-.0386									
.750							.0502	-.1378		
.760				.0006						
.775					.0239	.0534				
.793	.2205									
.798			-.0673							
.808				.1335						
.834		.0838								
.839			.1281							
.850					.0489	.1088	.0488			
.857				.0826						
.862									-.6190	
.865		.2642								
.879			.1305							
.900		.1990			.0294			-.0265		
.905				.0429						
.919			.1114							
.950					.0526	.1506	.0772			
.953				.0160						
.955			.1180							
.965		.1558								

DATE 11 FEB 76 TABULATED PRESSURE DATA - OA148 (AMES 11-073-1) PAGE 5005

AMES 11-073(OA148) -140A/B/C/R ORB LEFT WING TOP (XEBU68)

ALPHA (5) = 11.978 BETA (2) = -3.840 MACH = .59656 Q = 594.57 P = 2388.7 RN/L = 4.8403

SECTION (1)LEFT WING TOP SURF DEPENDENT VARIABLE CP

2Y/BW	.2350	.2990	.3640	.4270	.5340	.6730	.7800	.8870	.9720	1.0000
X/CW										
.000	-.2745	-.7263	-.8741	-.5589	-.2967	-.4089	-.5731	-.8528	-2.2218	
.010		-.7166	-.5523		-1.6557	-1.7384	-2.1489	-2.5981		
.020		-.5253		.0000	-1.5911	-1.8961	-2.3160	-2.7022	-2.5039	
.040			.3372	-1.0333						
.041	-.2453									
.050					-1.6209	-1.9447	-2.3174	-2.5898		
.069										
.080					-1.6386				-2.2578	
.081				-1.0242						
.086			-.3691							
.094		-.3844								
.113	-.2321									
.150					-1.2016	-1.3814	-1.3636	-1.3104		
.157										
.163			.0000						-1.7098	
.177				-.8660						
.229		-.4508								
.246			-.7222							
.247	-.1172									
.250					-.8534	-1.0514	-1.1432	-1.2548		
.274				-.7494						
.345										
.362		-.6062							-1.6420	
.390			-.5986							
.400					-.4163	-.4970		-.7157		
.402				-.5256						
.418										
.429	-.1986									-1.8333
.497		-.6709								
.503										
.547	-.5254								-1.5361	
.550										
.565					-.2474	-.2004				
.600				-.1218						
.633	-.4441							-.3842		
.637			-.2257							
.650										
.670							-.1510			
.700		-.0839							-1.0446	
.723						-.0672				
.725										-1.4296
.727	-.1204				-.0925					
.750										
.760							.0274	-.1399		
.775				-.0308						
					-.0044	.0271				

AMES 11-073(OA148) -140A/B/C/R ORB LEFT WING TOP (XE2USS)

ALPHA (5) = 11.978 BETA (2) = -3.840

SECTION (1)LEFT WING TOP SURF DEPENDENT VARIABLE CP

2Y/BW	.2350	.2990	.3640	.4270	.5340	.6730	.7800	.8870	.9720	1.0000
X/CW										
.793	.1321									
.798			-.0829							
.808				.0971						
.834		.0156								
.839			.1198							
.850					.0960	.0532	.0358			
.857				.0424						
.862									-.7373	
.865		.1889								
.879			.0844							
.900		.1279			.0910			-.0349		
.905				.0061						
.919			.0542							
.950					.1253	.0958	.0635			
.953				-.0095						
.955			.0559							
.965		.1073								

ALPHA (5) = 11.991 BETA (3) = .186 MACH = .59656 Q = 594.57 P = 2386.7 RN/L = 4.8403

SECTION (1)LEFT WING TOP SURF DEPENDENT VARIABLE CP

2Y/BW	.2350	.2990	.3640	.4270	.5340	.6730	.7800	.8870	.9720	1.0000
X/CW										
.000	-.4023	-.9019	-.8745	-.7711	-.4828	-.5991	-.7639	-1.0486	-2.4510	
.010		-.6161	-.4320		-1.7502	-1.8929	-2.2782	-2.7161		
.020		-.4764		.0000	-1.6329	-1.9905	-2.4681	-2.8143	-1.9758	
.040			-.3946	-.8979						
.041	-.3584									
.050					-1.5762	-1.9378	-2.3848	-2.6476		
.069									-1.6932	
.080					-1.5345					
.081				-.8498						
.085			-.4591							
.094		-.5230								
.113	-.2244									
.150					-1.1176	-1.3503	-1.3734	-1.3617		
.157									-1.5344	
.163			.0000							
.177				-.8586						
.229		-.6733								
.245			-.8001							
.247	-.1553									
.250					-.7707	-.9907	-1.0860	-1.1312		

AMES 11-073(OA149) -140A/B/C/R ORB LEFT WING TOP (XEBUSB)

ALPHA (5) = 11.991 BETA (3) = .186

SECTION (1)LEFT WING TOP SURF DEPENDENT VARIABLE CP

2Y/BW	.2350	.2930	.3540	.4270	.5340	.6730	.7800	.8870	.9720	1.0000
X/CW										
.274				-.7661						
.345									-1.5094	
.362		-.5516								
.390			-.7069							
.400					-.4859	-.4507		-.6661		
.402				-.4760						
.418										-1.6267
.429	-.2343									
.497		-.6624								
.503									-1.3908	
.547	-.5387									
.550					-.3384	-.2371				
.565				-.2415						
.600								-.3395		
.633	-.4677									
.637			-.2775							
.650							-.1481			
.670									-.9168	
.700		-.1152				-.1045				
.723										-1.1045
.725					-.0380					
.727	-.1558									
.750							-.0338	-.1423		
.760				-.1808						
.775					.0906	-.0627				
.793	.0830									
.798			-.0870							
.808				-.0679						
.834		-.0235								
.839			.1376							
.850					.0951	-.0432	.0C-8			
.857				-.0744						
.862									-.6207	
.865		.1447								
.879			.1013							
.900		.0939			.0740			-.0530		
.905				-.0775						
.919			.0676							
.950					.0853	.0310	.0381			
.953				-.0507						
.955			.0669							
.965		.0823								

AMES 11-073(OA148) -140A/B/C/R ORB LEFT WING TOP (XESLBB)

ALPHA (5) = 11.977 BETA (4) = 4.246 MACH = .59656 Q = 594.57 P = 2386.7 RNL = 4.E-03

SECTION (1)LEFT WING TOP SURF DEPENDENT VARIABLE CP

2Y/BW	.2350	.2990	.3540	.4270	.5340	.6730	.7800	.8870	.9720	1.0000
X/CW										
.000	-.5255	-.9839	-.5955	-.8857	-.6567	-.8200	-1.0004	-1.2796	-2.5890	
.010		-.5394	-.4643		-1.7814	-2.0398	-2.4605	-2.6225		
.020		-.5219		.0000	-1.6168	-2.1138	-2.6250	-2.6254	-1.6723	
.040			-.4678	-.7364						
.041	-.4911									
.050					-1.4904	-1.8946	-2.4724	-2.3946		
.069									-1.5483	
.080					-1.3976					
.081				-.8090						
.085			-.5016							
.094		-.5693								
.113	-.2498									
.150					-.9900	-1.2798	-1.3349	-1.6083		
.157									-1.5376	
.163			.0000							
.177				-.8140						
.229		-.7085								
.246			-.8394							
.247	-.2044									
.250					-.7715	-.9063	-1.0230	-1.0184		
.274				-.7404						
.345									-1.3350	
.362		-.4931								
.390			-.8332							
.400					-.5397	-.4755		-.5757		
.402				-.6125						
.416										-1.1873
.429	-.2481									
.497		-.6210								
.503									-1.1630	
.547	-.5269									
.550					-.2749	-.3227				
.565				-.4921						
.600								-.2378		
.633	-.4826									
.637			-.2228							
.650							-.2147			
.670									-.8811	
.700		-.1434				-.1739				
.723										-.6103
.725					-.0813					
.727	-.1765									
.750							-.1080	-.0853		
.760				-.1947						
.775					-.0314	-.0346				

AMES 11-073(OA146) -140A/B/C/R ORB LEFT WING TOP (XEBUSB)

ALPHA (5) = 11.977 BETA (4) = 4.246

SECTION (1)LEFT WING TOP SURF DEPENDENT VARIABLE CP

2Y/BW	.2350	.2990	.3640	.4270	.5340	.6730	.7800	.8870	.9720	1.0000
X/CW										
.793	.0343									
.798			-.0794							
.808				-.0149						
.834		-.0505								
.839			.1326							
.850					-.0371	-.0083	-.0685			
.857				.0092						
.862									-.5637	
.865		.0895								
.879			.0834							
.900		.0520			-.0968			-.0738		
.905				.0165						
.919			.0535							
.950					-.0913	.0744	-.0016			
.953				.0444						
.955			.0521							
.965		.0511								

ALPHA (5) = 11.969 BETA (5) = 8.308 MACH = .59656 Q = 594.57 P = 2386.7 RN/L = 4.8403

SECTION (1)LEFT WING TOP SURF DEPENDENT VARIABLE CP

2Y/BW	.2350	.2990	.3640	.4270	.5340	.6730	.7800	.8870	.9720	1.0000
X/CW										
.000	-.6682	-1.0730	-.5623	-.9592	-.8953	-1.0821	-1.2356	-1.5016	-1.8503	
.010		-.5940	-.5055		-1.8709	-2.2285	-2.6784	-2.4494		
.020		-.6011		.0000	-1.5919	-2.2425	-2.7892	-2.3327	-1.3885	
.040			-.5147	-.7240						
.041	-.7045									
.050					-1.3781	-1.7701	-2.5657	-2.0584		
.069									-1.3308	
.080					-1.2349					
.081				-.7704						
.085			-.5583							
.094		-.6182								
.113	-.3320									
.150					-.8876	-1.1871	-1.2772	-1.7429		
.157									-1.1700	
.163			.0000							
.177				-.7930						
.229		-.8208								
.245			-1.0106							
.247	-.2491									
.250					-.8063	-.8215	-.9448	-1.1439		

DATE 11 FEB 78 TABULATED PRESSURE DATA - CA148 (AMES 11-073-1) PAGE 0010

AMES 11-073(CA148) -140A/B/C/R ORB LEFT WING TOP (KEELER)

ALPHA (5) = 11.959 BETA (5) = 8.308

SECTION (1)LEFT WING TOP SURF DEPENDENT VARIABLE CP

2Y/BW	.2350	.2990	.3640	.4270	.5340	.6730	.7800	.8870	.9720	1.0000
X/CW										
.274				-.7594						
.345									-1.0243	
.362		-.3969								
.390			-.7211							
.400					-.5221	-.5484		-.5542		
.402				-.7832						
.418										-.9224
.429	-.2371									
.497		-.6002								
.503									-.9674	
.547	-.4998									
.550					-.3569	-.3697				
.565				-.4967						
.600								-.2454		
.633	-.4818									
.637			-.2349							
.650							-.2875			
.670									-.7829	
.700		-.1905				-.2020				
.723										-.4694
.725					-.1860					
.727	-.2037									
.750							-.1598	-.0830		
.760				-.1801						
.775					-.2118	-.0380				
.793	-.0096									
.799			-.1175							
.808				.0094						
.834		-.1105								
.839			.0761							
.850					-.2218	-.0437	-.0793			
.857				.0116						
.862									-.4913	
.865		.0422								
.879			.0445							
.900		.0107			-.2507			-.0830		
.905				.0163						
.919			.0264							
.950					-.1671	.0158	-.0036			
.953				.0437						
.955			.0261							
.955		.0154								

AMES 11-073(OA148) -140A/B/C ORB LEFT WING TOP (XEBUSS) (05 AUG 75)

REFERENCE DATA

SREF = 2690.0000 SQ.FT. XMRP = 1076.6800 IN. XO
LREF = 474.8000 IN. YMRP = .0000 IN. YO
BREF = 936.0680 IN. ZMRP = 375.0000 IN. ZO
SCALE = .0300

PARAMETRIC DATA

RUDDER = .000 SPDBRK = 55.000
BDFLAP = 22.500 L-ELVN = -10.000
R-ELVN = -10.000 MACH = .900

ALPHA (1) = -3.989 BETA (1) = -3.851 MACH = .89987 Q = 599.88 P = 1059.3 RN/L = 3.6263

SECTION (1)LEFT WING TOP SURF DEPENDENT VARIABLE CP

2Y/BW	.2350	.2990	.3640	.4270	.5340	.6730	.7800	.8870	.9720	1.0000
X/CW										
.000	-.4462	-.0394	-.1003	.1464	.4086	.3134	.2446	.2563	-1.0977	
.010		.0390	.0598		.6218	.5908	.5512	.4656		
.020		.0482		.0000	.5569	.5094	.4820	.4396	-.3651	
.040			.1674	.4019						
.041	-.0443									
.050					.3515	.3021	.2766	.2269		
.069									-.4206	
.080					.1638					
.081				.2776						
.086			.2949							
.094		.0610								
.113	.0462									
.150					-.0559	-.0854	-.0831	-.1469		
.157									-.4166	
.163			.0000							
.177				.0128						
.229		.1721								
.246			.0938							
.247	.0808									
.250					-.2294	-.2703	-.3331	-.4312		
.274				-.1231						
.345									-.0642	
.362		.1698								
.390			-.0932							
.400					-.1190	-.2091		-.3160		
.402				-.1181						
.418										-.6020
.429	.1671									
.497		-.0513								
.503									-.0039	
.547	.0436									
.550					.0262	-.0285				
.565				.0980						
.600								.0658		
.633	-.0585									
.637			.1445							
.650							.1260			
.670									.1335	

AMES 11-073(OA148) -140A/B/C ORB LEFT WING TOP (XEEUSS)

ALPHA (1) = -3.989 BETA (1) = -3.851

SECTION (1)LEFT WING TOP SURF DEPENDENT VARIABLE CP

2Y/BW	.2350	.2990	.3643	.4270	.5340	.6730	.7800	.8870	.9720	1.0000
X/CW										
.700		.1555				.1902				
.723										-1.2910
.725					.2363					
.727	.1181									
.750							.5470	.3710		
.760				.2268						
.775					.5772	.4341				
.793	.2975									
.798			.2172							
.808				.5223						
.834		.2001								
.839			.4920							
.850					.3549	.2763	.2901			
.857				.3415						
.862									.0663	
.865		.5214								
.879			.3350							
.900		.2844			.2285			.1947		
.905				.2297						
.919			.2142							
.950					.1288	.1905	.1613			
.953				.1228						
.955			.1287							
.965		.1587								

ALPHA (1) = -3.987 BETA (2) = .189 MACH = .89987 Q = 599.88 P = 1059.3 PN/L = 3.6263

SECTION (1)LEFT WING TOP SURF DEPENDENT VARIABLE CP

2Y/BW	.2350	.2990	.3640	.4270	.5340	.6730	.7800	.8870	.9720	1.0000
X/CW										
.000	-.4643	-.0008	-.0241	.1622	.3523	.2271	.1457	.1440	-.7672	
.010		.0392	.0773		.5565	.5103	.4741	.3975		
.020		.0369		.0000	.5006	.4471	.4197	.3804	-.4303	
.040			.1544	.3433						
.041	-.0782									
.050					.3075	.2653	.2437	.1947		
.059									-.4673	
.080					.1322					
.081				.2398						
.096			.2605							
.094		.0357								
.113	.0330									
.150					-.0603	-.0886	-.0755	-.1506		

DATE 11 FEB 76 TABULATED PRESSURE DATA - OA148 (AMES 11-073-1)

AMES 11-073:OA148) -140A/B/C 093 LEFT WING TOP

ALPHA (1) = -3.987 BETA (2) = .189

SECTION (1)LEFT WING TOP SURF DEPENDENT VARIABLE CP

2Y/BW	.2350	.2990	.3640	.4270	.5340	.6730	.7800	.8870	.9720	1.0000
X/CW										
.157									-.3957	
.163			.0000							
.177				.0157						
.229		.1440								
.246			.0762							
.247	.0638				- 2247	-.2585	-.2998	-.4217		
.250										
.274				-.1175					-.0742	
.345										
.362		.1464								
.390			-.0920							
.400					-.1425	-.2246		-.3100		
.402				-.1267						-.6259
.418										
.429	.1472									
.497		-.0615							-.0258	
.503										
.547	.0332									
.550					-.0301	-.0656				
.565				.0427						
.600								.0486		
633	-.0644									
.637			.0849							
.650							.1020			
.670									.1021	
.700		.1094				.1608				
.723										-1.3485
.725					.1970					
.727	.0735									
.750							.5244	.3619		
.760				.1828						
.775					.5558	.4113				
.793	.2424									
.798			.1673							
.809				.4923						
.834		.1452								
.839			.4540							
.850					.3273	.2444	.2912			
.857				.3052						
.862									.0352	
.865		.4912								
.879			.2917							
.900		.2405			.2027			.1802		
.905				.1931						
.919			.1747							

AMES [illegible]-073(DATAB) -140A/B/C GRE LEFT WING TOP DEGREES

ALPHA (1) = -3.337 BETA (2) = .189

SECTION (1)LEFT WING TOP SURF DEPENDENT VARIABLE CP

2Y/BW	.2350	.2930	.3640	.4270	.5340	.6730	.7800	.8370	.9720	1.0000
X/CW										
.950					.1095	.1710	.1544			
.953				.0960						
.955			.0946							
.965		.1229								

ALPHA (1) = -3.931 BETA (3) = 4.272 MACH = .89987 Q = 599.88 P = 1858.3 RNYL = 3.5263

SECTION (1)LEFT WING TOP SURF DEPENDENT VARIABLE CP

2Y/BW	.2350	.2930	.3640	.4270	.5340	.6730	.7800	.8370	.9720	1.0000
X/CW										
.000	-.4987	.0238	.0297	.1859	.3035	.1582	.0669	.0505	-.6359	
.010		.0399	.0916		.4877	.4353	.3935	.3313		
.020		.0316		.0000	.4310	.3783	.3462	.3071	-.4547	
.040			.1449	.2873						
.041	-.1059									
.050					.2615	.2134	.1834	.1452		
.059									-.4929	
.080					.1035					
.081				.2055						
.086			.2257							
.094		.0288								
.113	.0068									
.150					-.0688	-.0993	-.1002	-.1844		
.157									-.4258	
.163			.0000							
.177				.0022						
.229		.1254								
.245			.0554							
.247	.0547									
.250					-.2210	-.2552	-.3066	-.4429		
.274				-.1201						
.345									-.1058	
.362		.1285								
.390			-.0967							
.400					-.1700	-.2628		-.3465		
.402				-.1482						
.418										-.5373
.429	.1238									
.497		-.0736								
.503									-.0487	
.547	.0199									
.550					-.0955	-.1299				
.565				-.0205						

AMES 11-073(OA149) -140A/B/C OF3 LEFT WING TOP (XEBUS)

ALPHA (1) = -3.991 BETA (3) = 4.272

SECTION (1)LEFT WING TOP SURF DEPENDENT VARIABLE CP

2Y/BW	.2350	.2990	.3640	.4270	.5340	.6730	.7800	.8870	.9720	1.0000
X/CW										
.600								.0328		
.633	-.0895									
.637			.0231							
.650							.0721			
.670									.0705	
.700		.0482				.1281				
.723										-1.2644
.725					.1552					
.727	.0173									
.750							.4955	.3455		
.760				.1327						
.775					.5305	.3769				
.793	.1840									
.799			.1189							
.809				.4549						
.834		.0863								
.839			.4158							
.850					.2958	.2056	.2629			
.857				.2700						
.862									.0012	
.865		.4503								
.879			.2589							
.900		.1963			.1695			.1590		
.905				.1633						
.919			.1426							
.950					.0823	.1451	.1404			
.953				.0681						
.955			.0638							
.965		.0915								

ALPHA (2) = .009 BETA (1) = -3.868 MACH = .90190 Q = 601.65 P = 1056.6 PN/L = 3.6047

SECTION (1)LEFT WING TOP SURF DEPENDENT VARIABLE CP

2Y/BW	.2350	.2990	.3640	.4270	.5340	.6730	.7800	.8870	.9720	1.0000
X/CW										
.000	-.3678	.0495	.1076	.3775	.5470	.4800	.4460	.4508	-.3625	
.010		.0520	.1556		.4684	.4768	.4328	.2880		
.020		.0284		.0000	.3517	.3129	.2855	.2338	-.2357	
.040			.1940	.2108						
.041	-.1265									
.050					.0889	.0323	.0086	-.0319		
.069									-.3471	
.080					-.1331					

AMES 11-073(OA148) -140A/B/C ORB LEFT WING TOP (XEBU69)

ALPHA (2) = .008 BETA (1) = -3.868 .

SECTION (1)LEFT WING TOP SURF DEPENDENT VARIABLE CP

2Y/BW	.2350	.2990	.3640	.4270	.5340	.6730	.7800	.8870	.9720	1.0000
X/CW										
.081				.0436						
.086			.2261							
.094		.0118								
.113	-.0233									
.150					-.3490	-.3889	-.3897	-.4071		
.157									-.6551	
.163			.0000							
.177				-.2229						
.229		.1086								
.246			-.0842							
.247	.0332									
.250					-.4807	-.5958	-.6378	-.6488		
.274				-.3441						
.345									-.1340	
.362		.0487								
.380			-.2791							
.400					-.2182	-.3216		-.5314		
.402				-.2654						
.418										-.0648
.425	.1021									
.497		-.2271								
.503									-.1207	
.547	-.0976									
.550					-.0014	-.0313				
.565				.0543						
.600								.0693		
.633	-.2299									
.637			.1030							
.650							.1355			
.670									.0465	
.700		.1119				.1890				
.723										-.5809
.725					.2349					
.727	.0675									
.750							.5132	.3197		
.760				.2323						
.775					.5082	.4066				
.793	.2621									
.798			.2248							
.808				.4904						
.830		.2086								
.833			.4720							
.850					.3471	.2789	.2683			
.857				.3449						
.862									.0292	

AMES 11-073(OA148) -140A/B/C ORB LEFT WING TOP (XE8U69)

ALPHA (2) = .008 BETA (1) = -3.868

SECTION (1)LEFT WING TOP SURF DEPENDENT VARIABLE CP

2Y/BW	.2350	.2990	.3640	.4270	.5340	.6730	.7800	.8870	.9720	1.0000
X/CW										
.865		.4788								
.879			.3402							
.900		.3026			.2245			.1574		
.905				.2334						
.919			.2218							
.950					.1179	.1853	.1423			
.953				.1208						
.955			.1307							
.965		.1695								

ALPHA (2) = .010 BETA (2) = .177 MACH = .90190 Q = 601.65 P = 1056.6 RN/L = 3.6047

SECTION (1)LEFT WING TOP SURF DEPENDENT VARIABLE CP

2Y/BW	.2350	.2990	.3640	.4270	.5340	.6730	.7800	.8870	.9720	1.0000
X/CW										
.000	-.4057	.0167	.0934	.3485	.4952	.4125	.3673	.3674	-.3671	
.010		.0022	.1260		.3849	.3939	.3484	.2210		
.020		.0091		.0000	.2765	.2463	.2165	.1685	-.3209	
.040			.1570	.1558						
.041	-.1934									
.050					.0337	-.0123	-.0329	-.0747		
.069									-.4014	
.080					-.1579					
.081				.0167						
.086			.1793							
.094		-.0105								
.113	-.0345									
.150					-.3517	-.3933	-.3859	-.4189		
.157									-.6779	
.163			.0000							
.177				-.2278						
.229		.0891								
.246			-.0984							
.247	.0145									
.250					-.4775	-.5786	-.6218	-.6564		
.274				-.2942						
.345									-.1173	
.362		.0287								
.390			-.2572							
.400					-.2478	-.3571		-.4492		
.402				-.2777						
.418										-.0850
.429	.0784									

AMES 11-073(OA148) -140A/B/C ORB LEFT WING TOP (XE8U69)

ALPHA (2) = .010 BETA (2) = .177

SECTION (1)LEFT WING TOP SURF DEPENDENT VARIABLE CP

2Y/BW	.2350	.2990	.3640	.4270	.5340	.6730	.7800	.8870	.9720	1.0000
X/CW										
.497		-.2306								
.503									-.0898	
.547	-.1117									
.550					-.0642	-.0743				
.565				-.0098						
.600								.0524		
.633	-.2348									
.637			.0439							
.650							.1095			
.670									.0487	
.700		.0560				.1635				
.723										-.6644
.725					.1940					
.727	.0182									
.750							.5041	.3245		
.760				.1848						
.775					.4848	.3778				
.793	.2055									
.798			.1745							
.808				.4572						
.834		.1547								
.839			.4238							
.850					.3219	.2572	.2615			
.857				.3058						
.862									.0127	
.865		.4197								
.879			.3001							
.900		.2479			.2013			.1538		
.905				.1996						
.919			.1839							
.950					.1034	.1654	.1357			
.953				.0952						
.955			.0993							
.965		.1294								

AMES 11-073(OA148) -140A/B/C ORB LEFT WING TOP (XE8U69)

ALPHA (2) = .007 BETA (3) = 4.253 MACH = .90190 Q = 601.65 P = 1056.6 RN/L = 3.6047

SECTION (1)LEFT WING TOP SURF DEPENDENT VARIABLE CP

2Y/BW	.2350	.2990	.3640	.4270	.5340	.6730	.7800	.8870	.9720	1.0000
X/CW										
.000	-.4439	-.0311	.0609	.3145	.4515	.3305	.3122	.3033	-.3240	
.010		-.0400	.0847		.3022	.3111	.2583	.1199		
.020		-.0396		.0000	.1999	.1665	.1325	.0781	-.3744	
.040			.1261	.1016						
.041	-.2801									
.050					-.0182	-.0712	-.0978	-.1405		
.063									-.4692	
.080					-.1803					
.081				-.0155						
.085			.1510							
.094		-.0188								
.113	-.0431									
.150					-.3374	-.4048	-.4115	-.4582		
.157									-.7108	
.163			.0000							
.177				-.2181						
.229		.0754								
.246			-.1079							
.247	.0085									
.250					-.4604	-.5700	-.6110	-.6808		
.274				-.2865						
.345									-.0926	
.362		.0205								
.390			-.2482							
.400					-.2667	-.3951		-.6553		
.402				-.2964						
.418										-.0978
.429	.0691									
.497		-.2240								
.503									-.0718	
.547	-.1098									
.550					-.1335	-.1428				
.565				-.0745						
.600								.0518		
.633	-.2352									
.637			-.0222							
.650							.0914			
.670									.0349	
.700		-.0008				.1289				
.723										-.6572
.725					.1496					
.727	-.0337									
.750							.4659	.3198		
.760				.1379						
.775					.4551	.3449				

AMES 11-073(OA148) -140A/B/C ORB LEFT WING TOP (XE8U89)

ALPHA (3) = .007 BETA (3) = 4.253

SECTION (1)LEFT WING TOP SURF DEPENDENT VARIABLE CP

2Y/BW	.2350	.2990	.3640	.4270	.5340	.6730	.7800	.8870	.9720	1.0000
X/CW										
.793	.1439									
.738			.1242							
.809				.4165						
.834		.0884								
.839			.3743							
.850					.2925	.2280	.2590			
.857				.2705						
.862									-.0037	
.865		.3663								
.879			.2490							
.900		.1967			.1719			.1475		
.905				.1670						
.919			.1471							
.950					.0820	.1483	.1253			
.953				.0693						
.955			.0681							
.965		.0910								

ALPHA (3) = 4.005 BETA (1) = -3.869 MACH = .90083 Q = 600.73 P = 1057.6 RN/L = 3.5915

SECTION (1)LEFT WING TOP SURF DEPENDENT VARIABLE CP

2Y/BW	.2350	.2990	.3640	.4270	.5340	.6730	.7800	.8870	.9720	1.0000
X/CW										
.000	-.2990	-.0393	.0614	.4092	.6092	.5751	.5474	.4886	-.1787	
.010		-.0877	.0737		.1696	.2175	.1110	-.1224		
.020		-.0980		.0000	.0381	-.0056	-.0747	-.1941	-.5296	
.040			.1039	-.0387						
.041	-.1787									
.050					-.2351	-.3210	-.3858	-.4683		
.069									-.6276	
.090					-.4641					
.091				-.2181						
.096			.0992							
.094		-.0563								
.113	-.0943									
.150					-.6956	-.7327	-.7211	-.7268		
.157									-.9016	
.163			.0000							
.177				-.4565						
.229		.0518								
.245			-.2621							
.247	-.0099									
.250					-.7481	-.9144	-.9290	-.8051		

AMES 11-073(OA148) -140A/B/C CR3 LEFT WING TOP (XESUS9)

ALPHA (S) = 4.005 BETA (I) = -3.869

SECTION (1)LEFT WING TOP SURF DEPENDENT VARIABLE CP

2Y/BW	.2350	.2930	.3640	.4270	.5340	.6730	.7800	.8870	.9720	1.0000
X/CW										
.274				-.5860						
.345									-.4383	
.362		-.0681								
.390			-.5337							
.400					-.3500	-.6366		-.4239		
.402				-.6226						
.418										-.7104
.423	.0452									
.497		-.4214								
.503									-.2644	
.547	-.2129									
.550					-.0292	-.1199				
.565				.0014						
.600								-.1939		
.633	-.4912									
.637			.0383							
.650							-.1769			
.670									-.1536	
.700		.0279				.0945				
.723										-.3613
.725					.1901					
.727	-.0156									
.750							.0390	-.0185		
.760				.2254						
.775					.3487	.2864				
.793	.2547									
.799			.2219							
.808				.3956						
.834		.2031								
.839			.4219							
.850					.2841	.2111	.1413			
.857				.3162						
.862									-.0419	
.865		.4864								
.879			.3293							
.900		.2904			.1934			.0362		
.905				.2205						
.919			.2181							
.950					.0936	.1626	.1211			
.953				.1088						
.955			.1269							
.965		.1709								

DATE 11 DEC 76 TABULATED PRESSURE DATA - OA148 (AMES 11-073-1) PAGE [illegible]

AMES 11-073(OA148) -140A/B/C OFB LEFT WING TOP (XEBU69)

ALPHA (3) = 4.002 BETA (2) = .179 MACH = .90083 Q = 600.78 P = 1057.6 PV/L = 3.5915

SECTION (1)LEFT WING TOP SURF DEPENDENT VARIABLE CP

2Y/BW	.2350	.2930	3640	.4270	.5340	.6730	.7800	.8870	.9720	1.0000
X/CW										
.000	-.3591	-.1492	-.0461	.3132	.5271	.4848	.4573	.3869	-.3124	
.010		-.1743	-.0153		.0652	.1010	.0027	-.2215		
.020		-.1511		.0000	-.0551	-.0995	-.1693	-.2872	-.6151	
.040			.0456	-.1023						
.041	-.3839									
.050					-.0999	-.3865	-.4426	-.5299		
.069									-.6922	
.080					-.4971					
.081				-.2500						
.086			.0608							
.094		-.0911								
.113	1057									
.150					-.7035	-.7478	-.7450	-.7580		
.157									-.9268	
.163			.0000							
.177				-.4752						
.229		.0317								
.246			-.2733							
.247	-.0289									
.250					-.7396	-.8887	-.9501	-.8378		
.274				-.5732						
.345									-.3425	
.362		-.0780								
.380			-.5253							
.400					-.4103	-.7019		-.4283		
.402				-.6020						
.418										-.7584
.429	.0276									
.497		-.4171								
.503									-.2427	
.547	-.2267									
.550					-.0738	-.0782				
.555				-.0378						
.600								-.1742		
.653	-.4862									
.637			-.0100							
.650							-.0834			
.670									-.0954	
.700		-.0085				.0972				
.723										-.4350
.725					.1573					
.727	-.0440									
.750							.1636	.0376		
.760				.1890						
.775					.3302	.2556				

AMES 11-0.3(OA148) -140A/B/C ORB LEFT WING TOP (XE8U59)

ALPHA (3) = 4.002 BETA (2) = .179

SECTION (1)LEFT WING TOP SURF DEPENDENT VARIABLE CP

2Y/BW	.2350	.2990	.3040	.4270	.5340	.6730	.7800	.8870	.9720	1.0000
X/CW										
.793	.2074									
.798			.1698							
.808				.3389						
.834		.1322								
.839			.3941							
.850					.2766	.1963	.2121			
.857				.2810						
.862									-.0273	
.865		.4493								
.879			.2825							
.890		.2415			.1853			.0586		
.905				.1894						
.913			.1800							
.950					.0854	.1272	.1422			
.953				.0804						
.965			.0975							
.965		.1352								

ALPHA (3) = 4.006 BETA (3) = 4.240 MACH = .90083 Q = 600.78 P = 1057.6 RN/L = 3.5915

SECTION (1)LEFT WING TOP SURF DEPENDENT VARIABLE CP

2Y/BW	.2350	.2990	.3640	.4270	.5340	.6730	.7800	.8870	.9720	1.0000
X/CW										
.000	-.4203	-.2634	-.1548	.1929	.4315	.3867	.3489	.2655	-.5108	
.010		-.2538	-.0591		-.0619	-.0256	-.1350	-.3692		
.020		-.1950		.0000	-.1588	-.2161	-.3022	-.4382	-.7684	
.040			.0101	-.1630						
.041	-.4978									
.050					-.3699	-.4700	-.5447	-.6382		
.069									-.7854	
.080					-.5424					
.081				-.2893						
.085			.0236							
.094		-.0938								
.113	-.1079									
.150					-.7064	-.7793	-.7875	-.8173		
.157									-.9809	
.163			.0000							
.177				-.4708						
.209		-.0014								
.245			-.2518							
.247	-.0321									
.250					-.7136	-.8197	-.9703	-.8575		

AMES 11-073(OA148) -140A/B/C ORB LEFT WING TOP (XEBUSS)

ALPHA (3) = 4.005 BETA (3) = 4.240

SECTION (1)LEFT WING TOP SURF DEPENDENT VARIABLE CP

2Y/BW	.2350	.2990	.3640	.4270	.5340	.6730	.7800	.8870	.9720	1.0000
X/CW										
.274				-.5539						
.345									-.2631	
.362		-.0858								
.390			-.4922							
.400					-.3917	-.6247		-.5179		
.402				-.5317						
.419										-.7027
.429	.0185									
.437		-.4170								
.503									-.2017	
.547	-.2289									
.560					-.1244	-.1052				
.585				-.1291						
.600								-.1798		
.633	-.4500									
.637			-.0808							
.650							.0019			
.670									-.0882	
.700		-.0373				.0735				
.723										-.5102
.725					.1220					
.727	-.0863									
.750							.3586	.0514		
.769				.1228						
.775					.2474	.1685				
.793	.1333									
.798			.1020							
.808				.3407						
.834		.0794								
.839			.3897							
.860					.2434	.1924	.2253			
.857				.2356						
.872									-.0273	
.865		.4222								
.879			.2591							
.900		.2010			.1628			.0748		
.905				.1506						
.919			.1495							
.950					.0628	.1352	.1326			
.953				.0560						
.955			.0749							
.965		.1032								

AMES 11-073(OA148) -140A/B/C ORB LEFT WING TOP (XE8U89)

ALPHA (4) = 7.976 BETA (1) = -3.869 MACH = .89993 Q = 600.24 P = 1059.3 RN/L = 3.5857

SECTION (1)LEFT WING TOP SURF DEPENDENT VARIABLE CP

2Y/BW	.2350	.2990	.3640	.4270	.5340	.6730	.7800	.8870	.9720	1.0000
X/CW										
.000	-.2643	-.2936	-.2797	.2095	.4849	.4646	.4275	.2948	-.5753	
.010		-.3732	-.2107		-.2681	-.1779	-.3176	-.5695		
.020		-.3165		.0000	-.3733	-.3971	-.4837	-.5535	-1.0970	
.040			-.0943	-.3949						
.041	-.2051									
.050					-.5878	-.6448	-.7431	-.8740		
.059									-1.0717	
.080					-.7702					
.081				-.5336						
.085			-.0707							
.094		-.1523								
.113	-.1583									
.150					-.9844	-1.0330	-.8738	-.8901		
.157									-1.1164	
.163			.0000							
.177				-.6618						
.229		-.0101								
.246			-.4319							
.247	-.0686									
.250					-1.0026	-.9784	-.7252	-.5046		
.274				-.7573						
.345									-.8387	
.362		-.1613								
.390			-.6530							
.400					-.6740	-.6491		-.4403		
.402				-.8869						
.418										-.9104
.429	.0051									
.497		-.5336								
.503									-.5607	
.547	-.3260									
.550					-.3245	-.5101				
.565				-.1768						
.600								-.3491		
.633	-.6693									
.637			-.0261							
.650							-.4442			
.670									-.4290	
.700		-.0606				-.3678				
.723										-.4820
.725					.0300					
.727	-.0639									
.750							-.3757	-.2605		
.760				.1911						
.775					.2254	-.1770				

AMES 11-073(OA148) -140A/B/C ORB LEFT WING TOP (E3.33)

ALPHA (4) = 7.976 BETA (1) = -3.869

SECTION (1)LEFT WING TOP SURF DEPENDENT VARIABLE CP

2Y/BW	.2350	.2990	.3640	.4270	.5340	.6730	.7800	.8870	.9720	1.0000
X/CW										
.793	.2498									
.798			.1396							
.808				.3804						
.834		.1596								
.839			.3593							
.850					.2802	-.0819	-.3223			
.857				.2703						
.862									-.2649	
.865		.5723								
.879			.2309							
.900		.2791			.2143			-.1887		
.905				.1750						
.919			.1448							
.950					.1326	.0519	-.2557			
.953				.0823						
.955			.0834							
.955		.1630								

ALPHA (4) = 7.978 BETA (2) = .182 MACH = .89993 Q = 600.24 P = 1059.5 PT/L = 3.5857

SECTION (1)LEFT WING TOP SURF DEPENDENT VARIABLE CP

2Y/BW	.2350	.2990	.3640	.4270	.5340	.6730	.7800	.8870	.9720	1.0000
X/CW										
.000	-.3478	-.4851	-.4022	.0369	.3509	.3319	.2851	.1488	-.8416	
.010		-.4858	-.1944		-.4060	-.3228	-.4694	-.7074		
.020		-.3709		.0000	-.4805	-.5126	-.6031	-.6719	-1.2200	
.040			-.0783	-.4317						
.041	-.4123									
.050					-.6584	-.7355	-.8324	-.9730		
.069									-1.2072	
.080					-.8186					
.091				-.5689						
.096			-.0703							
.094		-.1864								
.113	-.1927									
.150					-.9533	-1.0766	-.9418	-.8649		
.157									-1.1895	
.163			.0000							
.177				-.6522						
.189		-.1046								
.243			-.4154							
.247	-.0772									
.250					-.9770	-1.0496	-.7945	-.5579		

AMES 11-073(OA148) -140A/B/C ORB LEFT WING TOP [redacted]

ALPHA (4) = 7.978 BETA (2) = .182

SECTION (1)LEFT WING TOP SURF DEPENDENT VARIABLE CP

2Y/BW	.2350	.2990	.3640	.4270	.5340	.6730	.7800	.8370	.9720	1.0000
X/CW										
.274				-.7290						
.345									-.8335	
.362		-.1773								
.390			-.6524							
.400					-.5851	-.7055		-.4909		
.402				-.8560						
.418										-.7542
.429	-.0055									
.497		-.5593								
.503									-.6415	
.547	-.3478									
.550					-.3176	-.5249				
.565				-.1421						
.600								-.3822		
.633	-.6907									
.637			-.0946							
.650							-.4793			
.670									-.4165	
.700		-.0606				-.3311				
.723										-.4955
.725					.0516					
.727	-.1143									
.750							-.3910	-.2870		
.760				.1231						
.775					.2762	-.0246				
.793	.1478									
.799			.0623							
.809				.3384						
.834		.0812								
.839			.3433							
.850					.2439	.0306	-.3216			
.857				.1987						
.862									-.2366	
.865		.4546								
.875			.2359							
.900		.2277			.1550			-.2176		
.905				.1109						
.919			.1513							
.950					.0786	.0798	-.2255			
.953				.0089						
.955			.0880							
.955		.1282								

[illegible] FEB 78 TABULATED PRESSURE DATA - OA148 (AMES 11-073-1) [illegible]

AMES 11-073(OA148) -14-04/B/C ORB LEFT WING TOP INSIDE

ALPHA (4) = 7.979 BETA (3) = 4.241 MACH = .39993 Q = [illegible] = [illegible] [illegible] = 3.[illegible]

SECTION (11)LEFT WING TOP SURF DEPENDENT VARIABLE CP

2Y/BW	.2350	.2990	.3640	.4270	.5340	.6730	.7800	.8870	.9720	1.0000
X/CW										
.000	-.4380	-.5890	-.2415	-.1317	.2028	.1821	.1328	-.0122	-1.0791	
.010		-.3813	-.1689		-.5334	-.4780	-.6321	-.8747		
.020		-.3350		.0000	-.5986	-.6318	-.7422	-.8274	-1.2165	
.040			-.1462	-.3980						
.041	-.5193									
.050					-.7004	-.8220	-.9321	-1.0517		
.059									-1.1903	
.080					-.8277					
.081				-.4748						
.086			-.1542							
.094		-.3279								
.113	-.2048									
.150					-.9049	-1.0983	-1.0059	-.7754		
.157									-1.1159	
.163			.0000							
.177				-.5920						
.229		-.2214								
.246			-.5160							
.247	-.0887									
.250					-.9068	-1.0755	-.8721	-.6455		
.274				-.6882						
.345									-.7[illegible]	
.362		-.1062								
.390			-.6948							
.400					-.6355	-.7415		-.5698		
.402				-.8165						
.418										-.5593
.479	-.0199									
.497		-.5379								
.503									-.5594	
.547	-.3469									
.550					-.2872	-.5322				
.565				-.1726						
.600								-.4193		
.633	-.6555									
.637			-.1369							
.650							-.5023			
.670									-.4028	
.700		-.1329				-.2296				
.723										-.4767
.725					.1087					
.727	-.1749									
.750							-.3769	-.3261		
.760				-.0157						
.775					.3944	.0527				

AMES 11-0T3:OA148' -140A/B/C ORB LEFT WING TOP [illegible]

ALPHA (4) = 7.979 BETA (3) = 4.241

SECTION (1)LEFT WING TOP SURF DEPENDENT VARIABLE CP

2Y/BW	.2350	.2990	.3640	.4270	.5340	.6730	.7800	.8870	.9720	1.0000
X CW										
.793	.0767									
.798			.0683							
.808				.2404						
.834		.0348								
.839			.3438							
.850					.2031	.0806	-.2562			
.857				.1199						
.862									-.3022	
.865		.3781								
.879			.2230							
.900		.2025			.0956			-.2719		
.905				.0723						
.919			.1412							
.950					0241	.1153	-.1450			
.953				.0133						
.955			.0804							
.963		.1079								

ALPHA (5) = 11.950 BETA (1) = -3.853 MACH = .90010 Q = 600.36 P = 1088.5 RN/L = 3.5793

SECTION (1)LEFT WING TOP SURF DEPENDENT VARIABLE CP

2Y/BW	.2350	.2990	.3640	.4270	.5340	.6730	.7800	.8870	.9720	1.0000
X/CW										
.000	-.2793	-.6930	-.5509	-.1868	.2309	.2129	.1637	.0150	-.7285	
.010		-.6797	-.2643		-.7028	-.6037	-.7626	-.8647		
.020		-.5917		.0000	-.8222	-.7868	-.9037	-.7355	-.6284	
.040			-.1797	-.6492						
.041	-.2697									
.050					-.9589	-.9990	-1.0175	-.7769		
.063									-.5132	
.080					-1.0583					
.081				-.7361						
.086			-.1738							
.094		-.3429								
.113	-.2571									
.150					-1.1577	-.9298	-.9722	-.6728		
.157									-.5953	
.163			.0000							
.177				-.7865						
.229		-.2268								
.245			-.5569							
.247	-.1050									
.250					-1.0260	-.8610	-.8333	-.6325		

DATE 11 FEB 76 TABULATED PRESSURE DATA 148 (AMES 11-073-1) PAGE 5030

AMES 11-07[illegible] [illegible] -140A/B/C ORB LEFT WING TOP (XE8U89)

ALPHA (5) = 11.950 BETA (1) = -3.853

SECTION (1)LEFT WING TOP SURF DEPE[illegible] [illegible]E CP

2Y/BW	.2350	.2990	.3640	.4270	.5[illegible]	[illegible]	.7800	.8870	.9720	1.0000
X/CW										
.274				-.8433						
.345									-.8484	
.362		-.3777								
.390			-.7631							
.400					-.7[illegible]	-.7439		-.5744		
.402				-.8246						
.418										-.4453
.429	-.0289									
.497		-.7558								
.503									-.4495	
.547	-.4809									
.550					-.6896	-.6523				
.565				-.4507						
.600								-.5264		
.633	-.8188									
.637			-.2853							
.650							-.6095			
.670									-.4158	
.700		-.1887				-.5641				
.723										-.4252
.725					-.3208					
.727	-.2012									
.750							-.5677	-.5128		
.760				-.0825						
.775					-.1915	-.4567				
.793	.0988									
.798			-.1244							
.808				.1283						
.834		-.0227								
.839			.1709							
.850					-.0919	-.4565	-.5376			
.857				.0271						
.862									-.4037	
.865		.4169								
.879			.0933							
.900		.2450			-.0677			-.4844		
.905				-.0303						
.919			.0803							
.950					-.0233	-.3547	-.4746			
.953				-.1017						
.955			.0817							
.965		.1748								

AMES 11-073(OA148) -140A/B/C ORB LEFT WING TOP (XEBU69)

ALPHA (5) = 11.955 BETA (2) = .189 MACH = .90010 Q = 600.36 P = 1058.5 RN/L = 3.5793

SECTION ( )LEFT WING TOP SURF DEPENDENT VARIABLE CP

2Y/BW	.2350	.2990	.3640	.4270	.5340	.6730	.7800	.8870	.9720	1.0000
X/CW										
.000	-.3942	-.7800	-.3399	-.3607	.0575	.0438	-.0085	-.1572	-.6865	
.010		-.5412	-.2788		-.8451	-.7466	-.8971	-.9022		
.020		-.5065		.0000	-.9514	-.9277	-1.0382	-.6957	-.6420	
.040			-.2663	-.5386						
.041	-.4581									
.050					-1.0551	-1.0941	-1.0832	-.6586		
.069									-.5729	
.080					-1.0996					
.081				-.6223						
.086			-.2558							
.094		-.4785								
.113	-.2690									
.150					-1.2071	-1.0117	-1.0112	-.6699		
.157									-.5440	
.163			.0000							
.177				-.7273						
.229		-.5767								
.246			-.5713							
.247	-.1688									
.250					-.9905	-.9076	-.8749	-.6548		
.274				-.8282						
.345									-.5078	
.362		-.2800								
.390			-.7670							
.400					-.7897	-.8091		-.6172		
.402				-.5472						
.418										-.4868
.429	-.0623									
.497		-.7289								
.503									-.4820	
.547	-.4905									
.550					-.6424	-.6898				
.565				-.3534						
.600								-.5778		
.633	-.8349									
.637			-.3146							
.650							-.6330			
.670									-.4375	
.700		-.2251				-.5577				
.723										-.4669
.725					-.2331					
.727	-.2470									
.750							-.5800	-.5548		
.760				-.1323						
.775					-.0451	-.4053				

AMES 11-073(OA148) -140A/B/C ORB LEFT WING TOP (XEBU69)

ALPHA (5) = 11.955 BETA (2) = .189

SECTION (1)LEFT WING TOP SURF DEPENDENT VARIABLE CP

2Y/BW	.2350	.2990	.3640	.4270	.5340	.6730	.7800	.8870	.9720	1.0000
X/CW										
.793	.0733									
.798			-.1120							
.808				.0408						
.834		-.0523								
.839			.2139							
.850					-.0221	-.4081	-.5319			
.857				-.0661						
.862									-.4351	
.865		.2974								
.879			.1250							
.900		.2054			-.0610			-.5082		
.905				-.1249						
.919			.0895							
.950					-.0539	-.2630	-.4849			
.953				-.1680						
.955			.0632							
.965		.1396								

ALPHA (5) = 11.948 BETA (3) = 4.260 MACH = .90010 Q = 600.36 P = 1058.5 RN/L = 3.5793

SECTION (1)LEFT WING TOP SURF DEPENDENT VARIABLE CP

2Y/BW	.2350	.2990	.3640	.4270	.5340	.6730	.7800	.8870	.9720	1.0000
X/CW										
.000	-.4978	-.7404	-.3621	-.5197	-.1127	-.1322	-.1896	-.3493	-.7001	
.016		-.6229	-.3375		-.9836	-.8983	-1.0422	-.9611		
.020		-.6331		.0000	-1.0730	-1.0843	-1.1218	-.7625	-.6403	
.040			-.3280	-.4440						
.041	-.6168									
.050					-1.1193	-1.1981	-1.0339	-.6914		
.059									-.5843	
.080					-1.0941					
.081				-.5540						
.086			-.3081							
.094		-.6125								
.113	-.2322									
.150					-1.0718	-1.2201	-.8916	-.6729		
.157									-.5690	
.163			.0000							
.177				-.6649						
.229		-.6537								
.245			-.5993							
.247	-.2469									
.250					-1.0049	-1.0058	-.8387	-.6802		

AMES 11-073(0A148) -140A/B/C ORB LEFT WING TOP (XEBU69)

ALPHA (5) = 11.948 BETA (3) = 4.260

SECTION (1)LEFT WING TOP SURF DEPENDENT VARIABLE CP

2Y/BW	.2350	.2990	.3640	.4270	.5340	.6730	.7800	.8870	.9720	1.0000
X/CW										
.274				-.8021						
.345									-.5455	
.362		-.2914								
.390			-.8023							
.400					-.6486	-.8229		-.6631		
.402				-.9611						
.418										-.5284
.429	-.0990									
.497		-.7153								
.503									-.5305	
.547	-.4692									
.550					-.5210	-.6904				
.565				-.3555						
.600								-.6315		
.633	-.8310									
.637			-.2764							
.650							-.8710			
.670									-.5213	
.700		-.2419				-.5522				
.723										-.4883
.725					-.1346					
.727	-.2536									
.750							-.6239	-.6155		
.760				-.1942						
.775					.0239	-.3684				
.793	.0589									
.798			-.0959							
.808				.0142						
.834		-.0593								
.839			.2170							
.850					-.0639	-.3368	-.5601			
.857				-.0615						
.862									-.5071	
.865		.2272								
.879			.1337							
.900		.1567			-.1526			-.5515		
.905				-.0896						
.919			.0888							
.950					-.1621	-.2365	-.4691			
.953				-.1199						
.955			.0528							
.965		.1174								

AMES 11-073(OA148) -140A/B/C ORB LEFT WING TOP (XEBU70) (05 AUG 75)

REFERENCE DATA

SREF = 2690.0000 SQ.FT. XMRP = 1076.6800 IN. XO
LREF = 474.8000 IN. YMRP = .0000 IN. YO
BREF = 936.0680 IN. ZMRP = 375.0000 IN. ZO
SCALE = .0300

PARAMETRIC DATA

RUDDER = .000 SPDBRK = 55.000
BDFLAP = 22.500 L-ELVN = -10.000
R-ELVN = -10.000 MACH = .600

ALPHA (1) = -3.949 BETA (1) = -7.852 MACH = .59668 Q = 594.81 P = 2387.0 RN/L = 4.8517

SECTION (1)LEFT WING TOP SURF DEPENDENT VARIABLE CP

2Y/BW	.2350	.2990	.3640	.4270	.5340	.6730	.7800	.8870	.9720	1.0000
X/CW										
.000	-.1594	-.1456	-.3189	-.1488	.0713	-.0115	-.0708	.0041	-1.2404	
.010		-.0106	-.0594		.6110	.5999	.5821	.5375		
.020		.0275		.0000	.5653	.5681	.5436	.5014	-.1809	
.040			.0997	.3792						
.041	.0380									
.050					.3633	.3611	.3446	.3193		
.069									-.1334	
.080					.1752					
.081				.2571						
.086			.2645							
.094		.0623								
.113	.0533									
.150					-.0363	-.0375	-.0224	-.0367		
.157									-.1218	
.163			.0000							
.177				.0184						
.229		.1584								
.246			.0697							
.247	.0814									
.250					-.1655	-.1877	-.2148	-.2402		
.274				-.0867						
.345									-.0547	
.362		.1269								
.390			-.0666							
.400					-.0897	-.1296		-.1796		
.402				-.0757						
.418										-1.0455
.429	.1296									
.497		-.0371								
.503									-.0442	
.547	.0347									
.550					.0327	-.0081				
.565				.0864						
.600								.0205		
.633	-.0189									
.637			.1324							
.650							.0795			
.670									.0666	

AMES 11-073(OA148) -140A/B/C ORB LEFT WING TOP (XEBU70)

ALPHA (1) = -3.949 BETA (1) = -7.852

SECTION (1)LEFT WING TOP SURF DEPENDENT VARIABLE CP

2Y/BW	.2350	.2990	.3640	.4270	.5340	.6730	.7800	.8870	.9720	1.0000
X/CW										
.700		.1503				.1308				
.723										-2.0475
.725					.1854					
.727	.1174									
.750							.4390	.2660		
.760				.1772						
.775					.5064	.3575				
.793	.2771									
.798			.1777							
.808				.4300						
.834		.1860								
.839			.4102							
.850					.2733	.2310	.2141			
.857				.2683						
.862									.0016	
.865		.4536								
.879			.2657							
.900		.2350			.1658			.1391		
.905				.1720						
.919			.1600							
.950					.1012	.1630	.1356			
.953				.0958						
.955			.0924							
.965		.1231								

ALPHA (1) = -3.933 BETA (2) = -3.843 MACH = .59668 Q = 594.81 P = 2387.0 RN/L = 4.8517

SECTION (1)LEFT WING TOP SURF DEPENDENT VARIABLE CP

2Y/BW	.2350	.2990	.3640	.4270	.5340	.6730	.7800	.8870	.9720	1.0000
X/CW										
.000	-.1592	-.0948	-.2125	-.0877	.0471	-.0743	-.1411	-.0780	-1.1393	
.010		-.0056	-.0355		.5439	.5281	.5051	.4670		
.020		.0083		.0000	.5072	.4983	.4758	.4366	-.2619	
.040			.0877	.3296						
.041	-.0138									
.050					.3175	.3169	.3053	.2751		
.069									-.2002	
.080					.1491					
.081				.2184						
.086			.2289							
.094		.0277								
.113	.0171									
.150					-.0521	-.0511	-.0406	-.0582		

AMES 11-073(OA148) -140A/B/C ORB LEFT WING TOP (XEBU70)

ALPHA (1) = -3.933 BETA (2) = -3.843

SECTION (1)LEFT WING TOP SURF DEPENDENT VARIABLE CP

2Y/BW	.2350	.2990	.3640	.4270	.5340	.6730	.7800	.8870	.9720	1.0000
X/CW										
.157									-.1681	
.163			.0000							
.177				.0017						
.229		.1258								
.245			.0412							
.247	.0550									
.250					-.1810	-.1960	-.2223	-.2461		
.274				-.1063						
.345									-.0703	
.362		.1025								
.390			-.0810							
.400					-.1128	-.1529		-.1855		
.402				-.1016						
.418										-.9718
.429	.1064									
.497		-.0653								
.503									-.0613	
.547	.0088									
.550					-.0024	-.0336				
.565				.0522						
.600								.0101		
.633	-.0501									
.637			.0893							
.650							.0659			
.670									.0429	
.700		.1080				.1076				
.723										-2.1567
.725					.1594					
.727	.0752									
.750							.4288	.2624		
.760				.1489						
.775					.4866	.3361				
.793	.2363									
.798			.1491							
.808				.4047						
.834		.1489								
.839			.3833							
.850					.2548	.2085	.2098			
.857				.2443						
.862									-.0069	
.865		.4279								
.879			.2410							
.900		.2027			.1450			.1348		
.905				.1473						
.919			.1371							

AMES 11-073(OA148) -140A/B/C ORB LEFT WING TOP (XE8U70)

ALPHA (1) = -3.933 BETA (2) = -3.843

SECTION (1)LEFT WING TOP SURF DEPENDENT VARIABLE CP

2Y/BW	.2350	.2990	.3640	.4270	.5340	.6730	.7800	.8870	.9720	1.0000
X/CW										
.950					.0745	.1448	.1309			
.953				.0752						
.955			.0698							
.965		.0969								

ALPHA (1) = -3.929 BETA (3) = .189 MACH = .59666 Q = 594.81 P = 2387.0 RN/L = 4.8517

SECTION (1)LEFT WING TOP SURF DEPENDENT VARIABLE CP

2Y/BW	.2350	.2990	.3640	.4270	.5340	.6730	.7800	.8870	.9720	1.0000
X/CW										
.000	-.1536	-.0480	-.1178	-.0299	.0450	-.1280	-.2149	-.1716	-1.1008	
.010		-.0052	-.0051		.4838	.4529	.4263	.4020		
.020		-.0017		.0000	.4460	.4266	.4155	.3746	-.3233	
.040			.0781	.2740						
.041	-.0534									
.050					.2696	.2622	.2593	.2376		
.069									-.2550	
.080					.1120					
.081				.1837						
.086			.1953							
.094		.0023								
.113	-.0211									
.150					-.0698	-.0738	-.0569	-.0740		
.157									-.2042	
.163			.0000							
.177				-.0137						
.229		.1001								
.246			.0217							
.247	.0287									
.250					-.1897	-.2071	-.2248	-.2440		
.274				-.1260						
.345									-.0941	
.362		.0798								
.390			-.0979							
.400					-.1339	-.1610		-.1912		
.402				-.1238						
.418										-.8967
.429	.0846									
.497		-.0784								
.503									-.0752	
.547	-.0112									
.550					-.0321	-.0527				
.565				.0122						

AMES 11-073(OA148) -140A/B/C ORB LEFT WING TOP (XEBU70)

ALPHA (1) = -3.929 BETA (3) = .189

SECTION (1)LEFT WING TOP SURF DEPENDENT VARIABLE CP

2Y/BW	.2350	.2990	.3640	.4270	.5340	.6730	.7800	.8870	.9720	1.0000
X/CW										
.600								-.0005		
.633	-.0772									
.637			.0537							
.650							.0518			
.670									.0217	
.700		.0685				.0898				
.723										-2.1396
.725					.1355					
.727	.0395									
.750							.4204	.2548		
.760				.1184						
.775					.4656	.3139				
.793	.2001									
.798			.1194							
.808				.3811						
.834		.1091								
.839			.3563							
.850					.2363	.1803	.2037			
.857				.2240						
.862									-.0162	
.865		.4061								
.879			.2160							
.900		.1691			.1289			.1329		
.905				.1297						
.919			.1107							
.950					.0644	.1280	.1253			
.953				.0585						
.955			.0532							
.965		.0774								

ALPHA (1) = -3.935 BETA (4) = 4.269 MACH = .59666 Q = 594.81 P = 2387.0 RN/L = 4.8517

SECTION (1)LEFT WING TOP SURF DEPENDENT VARIABLE CP

2Y/BW	.2350	.2990	.3640	.4270	.5340	.6730	.7800	.8870	.9720	1.0000
X/CW										
.000	-.1649	-.0283	-.0513	.0289	.0591	-.1169	-.2403	-.2104	-.9680	
.010		-.0075	.0202		.4166	.3814	.3590	.3300		
.020		-.0127		.0000	.3811	.3571	.3440	.3050	-.3525	
.040			.0753	.2307						
.041	-.0838									
.050					.2225	.2066	.1969	.1842		
.069									-.2861	
.080					.0725					

AMES 11-073(OA148) -140A/B/C ORB LEFT WING TOP (XEBU7C)

ALPHA (11) = -3.935 BETA (4) = 4.269

SECTION (1)LEFT WING TOP SURF DEPENDENT VARIABLE CP

2Y/BW	.2350	.2390	.3640	.4270	.5340	.6730	.7800	.8870	.9720	1.0000
X/CW										
.081				.1525						
.086			.1721							
.094		-.0132								
.113	-.0395									
.150					-.0956	-.0984	-.0826	-.1101		
.157									-.2320	
.163			.0000							
.177				-.0264						
.229		.0884								
.246			.0045							
.247	.0162									
.250					-.2088	-.2201	-.2344	-.2573		
.274				-.1340						
.345									-.1118	
.362		.0691								
.390			-.1123							
.400					-.1585	-.1791		-.1935		
.402				-.1455						
.418										-.7485
.429	.0725									
.457		-.1018								
.503									-.0875	
.547	-.0298									
.550					-.0592	-.0717				
.565				-.0186						
.600								.0024		
.633	-.1043									
.637			.0138							
.550							.0425			
.670									.0042	
.700		.0343				.0764				
.723										-1.8996
.725					.1137					
.727	.0037									
.750							.4062	.2440		
.750				.0958						
.775					.4478	.2955				
.793	.1700									
.798			.0927							
.808				.3649						
.834		.0783								
.839			.3367							
.850					.2221	.1604	.1922			
.857				.2088						
.862									-.0220	

AMES 11-073(OA148) -140A/B/C ORB LEFT WING . (XEBU7D)

ALPHA (1) = -3.935 BETA (4) = 4.269

SECTION (1)LEFT WING TOP SURF DEPENDENT VARIABLE CP

2Y/BW	.2350	.2990	.3640	.4270	.5340	.6730	.7800	.8870	.9720	1.0000
X/CW										
.865		.3919								
.879			.2028							
.900		.1470			.1176			.1222		
.905				.1139						
.919			.0939							
.950					.0574	.1162	.1121			
.953				.0469						
.955			.0392							
.965		.0615								

ALPHA (1) = +3.949 BETA (5) = 8.334 MACH = .59666 Q = 594.81 P = 2387.0 RN/L = 4.8517

SECTION (1)LEFT WING TOP SURF DEPENDENT VARIABLE CP

2Y/BW	.2350	.2990	.3640	.4270	.5340	.6730	.7800	.8870	.9720	1.0000
X/CW										
.000	-.1746	-.0214	.0093	.1052	.0982	-.1012	-.2543	-.2318	-.8345	
.010		-.0138	.0491		.3574	.3155	.2935	.2613		
.020		-.0217		.0000	.3112	.2874	.2697	.2383	-.3841	
.040			.0821	.1843						
.041	-.1149									
.050					.1648	.1500	.1474	.1203		
.069									-.3198	
.080					.0325					
.081				.1089						
.086			.1468							
.094		-.0235								
.113	-.0571	-.								
.150					-.1166	-.1188	-.1046	-.1318		
.157									-.2631	
.163			.0000							
.177				-.0489						
.229		.0739								
.246			-.0181							
.247	.0076									
.250					-.2225	-.2298	-.2376	-.2631		
.274				-.1482						
.345									-.1332	
.[illegible]		.0552								
.390			-.1289							
.400					-.1788	-.1870		-.1981		
.402				-.1673						
.419										-.8130
.429	.0614									

AMES 11-073(OA148) -140A/B/C ORB LEFT WING TOP (XE8U7D)

ALPHA (1) = -3.949 BETA (5) = 8.334

SECTION (1)LEFT WING TOP SURF DEPENDENT VARIABLE CP

2Y/BW	.2350	.2990	.3640	.4270	.5340	.6730	.7800	.8870	.9720	1.0000
X/CW										
.497		-.1253								
.503										
.547	-.0488								-.0929	
.550					-.0882	-.0893				
.565				-.0493						
.600								-.0047		
.633	-.1345									
.637			-.0135							
.650							.0344			
.670										
.700		.0006							-.0152	
.723						.0655				
.725										-1.8610
.727	-.0376				.0993					
.750										
.760							.3969	.2407		
.775				.0788						
.793	.1411				.4386	.2843				
.798										
.808			.0783							
.834				.3508						
.839		.0602								
.850			.3225							
.857					.2144	.1478	.1879			
.862				.1950						
.865									-.0245	
.879		.3671								
.900			.1858							
.905		.1333			.1076			.1212		
.919				.1071						
.950			.0845							
.953					.0502	.1055	.1194			
.955				.0447						
.965			.0313							
		.0565								

DATE 11 FEB 76 TABULATED PRESSURE DATA - OA148 (AMES 11-073-1) PAGE 5242

AMES 11-073(OA148) -140A/B/C ORB LEFT WING TOP (XEBU70)

ALPHA (2) = .049 BETA (1) = -7.898 MACH = .59628 Q = 593.97 P = 2386.4 RN/L = .8452

SECTION (1)LEFT WING TOP SURF DEPENDENT VARIABLE CP

2Y/BW	.2350	.2990	.3640	.4270	.5340	.6730	.7800	.8870	.9720	1.0000
X/CW										
.000	-.0663	.0408	.0500	.2682	.4553	.4196	.3750	.4333	-.3003	
.010		.0728	.1325		.4878	.5258	.4942	.3646		
.020		.0616		.0000	.3636	.3592	.3341	.3030	-.0457	
.040			1792	.2025						
.041	-.0035									
.050					.0877	.0642	.0480	.0328		
.069									-.1249	
.080					-.1157					
.081				.0319						
.086			.2151							
.094		.0240								
.113	.0131									
.150					-.2764	-.3076	-.3005	-.2888		
.157									-.1914	
.163			.0000							
.177				-.1945						
.229		.1000								
.246			-.0963							
.247	.0400									
.250					-.3368	-.3788	-.4253	-.4455		
.274				-.2454						
.345									-.1630	
.362		.0093								
.390			-.1875							
.400					-.1739	-.2302		-.2794		
.402				-.1606						
.418										-.1768
.429	.0610									
.487		-.1474								
.503									-.1625	
.547	-.0720									
.550					-.0054	-.0565				
.565				.0489						
.600								-.0194		
.633	-.0989									
.637			.1015							
.650							.0593			
.670									.0	
.700		.1154				.1193				
.723										-.7475
.725					.1765					
.727	.0803									
.750							.4147	.2396		
.760				.1825						
.775					.4748	.3533				

AMES 11-073(OA148) -140A/B/C ORB LEFT WING TOP (XEB 70)

ALPHA (2) = .049 BETA (1) = -7.888

SECTION (1)LEFT WING TOP SURF DEPENDENT VARIABLE CP

2Y/BW	.2350	.2990	.3640	.4270	.5340	.6730	.7800	.8870	.9720	1.0000
X/CW										
.793	.2556									
.798			.1834							
.808				.4170						
.834		.1831								
.839			.4044							
.850					.2726	.2384	.2036			
.857				.2714						
.862									.0194	
.865		.4374								
.879			.2687							
.900		.2463			.1692			.1355		
.905				.1780						
.919			.1662							
.950					.1023	.1649	.1285			
.953				.1037						
.955			.1001							
.965		.1338								

ALPHA (2) = .056 BETA (2) = -3.864 MACH = .59628 Q = 593.97 P = 2386.4 RN/L = 4.8452

SECTION (1)LEFT WING TOP SURF DEPENDENT VARIABLE CP

2Y/BW	.2350	.2990	.3640	.4270	.5340	.6730	.7800	.8870	.9720	1.0000
X/CW										
.000	-.1013	.0267	.0608	.2778	.4357	.3789	.3411	.3749	-.2941	
.010		.0338	.1075		.4073	.4487	.4163	.2881		
.020		.0182		.0000	.2910	.2797	.2624	.2286	-.1020	
.040			.1404	.1389						
.041	-.0544									
.050					.0345	.0140	-.0041	-.0084		
.069									-.1692	
.080					-.1508					
.081				-.0057						
.086			.1752							
.094		-.0119								
.113	-.0317									
.150					-.2879	-.3104	-.3134	-.3003		
.157									-.2151	
.163			.0200							
.177				-.2036						
.279		.0695								
.245			-.1194							
.247	.0112									
.250					-.3566	-.3914	-.4280	-.4502		

AMES 11-073(OA148) -140A/B/C ORB LEFT WING TOP (XE8U70)

ALPHA (2) = .056 BETA (2) = -3.864

SECTION (1)LEFT WING TOP SURF DEPENDENT VARIABLE CP

2Y/BW	.2350	.2990	.3640	.4270	.5340	.6730	.7800	.8870	.9720	1.0000
X/CW										
.274				-.2671						
.345									-.1538	
.362		-.0182								
.390			-.2061							
.400					-.2003	-.2461		-.2812		
.402				-.1959						
.418										-.1727
.429	.0363									
.497		-.1800								
.503									-.1418	
.547	-.1025									
.550					-.0412	-.0745				
.565				.0077						
.600								-.0208		
.633	-.1330									
.637			.0581							
.650							.0431			
.670									.0259	
.700		.0711				.0993				
.723										-.7540
.725					.1502					
.727	.0346									
.750							.4057	.2376		
.760				.1499						
.775					.4502	.3231				
.793	.2099									
.798			.1477							
.808				.3871						
.834		.1449								
.839			.3712							
.850					.2520	.2107	.1963			
.857				.2445						
.862									.0155	
.865		.3967								
.879			.2446							
.900		.2087			.1511			.1290		
.905				.1533						
.919			.1383							
.950					.0865	.1484	.1223			
.953				.0806						
.955			.0789							
.965		.1133								

AMES 11-073(OA148) -140A/B/C ORB LEFT WING TOP (XE8U70)

ALPHA (2) = .058 BETA (3) = .180 MACH = .59628 Q = 593.97 P = 2386.4 RN/L = 4.8452

SECTION (1)LEFT WING TOP SURF DEPENDENT VARIABLE CP

2Y/BW	.2350	.2990	.3640	.4270	.5340	.6730	.7800	.8870	.9720	1.0000
X/CW										
.000	-.1305	-.0025	.0565	.2691	.4056	.3342	.2925	.3078	-.2985	
.010		-.0089	.0854		.3274	.3631	.3297	.2230		
.020		-.0214		.0000	.2217	.2206	.2003	.1599	-.1534	
.040			.1060	.0905						
.041	-.0986									
.050					-.0141	-.0298	-.0420	-.0441		
.069									-.2071	
.080					-.1800					
.081				-.0378						
.086			.1323							
.094		-.0375								
.113	-.0829									
.150					-.3052	-.3193	-.3118	-.3032		
.157									-.2272	
.163			.0000							
.177				-.2170						
.229		.0449								
.246			-.1374							
.247	-.0138									
.250					-.3657	-.3993	-.4207	-.4385		
.274				-.2730						
.345									-.1411	
.362		-.0332								
.390			-.2194							
.400					-.2240	-.2600		-.2779		
.402				-.2215						
.418										-.1647
.429	.0189									
.497		-.1961								
.503									-.1158	
.547	-.1194									
.550					-.0707	-.0891				
.565				-.0261						
.600								-.0242		
.633	-.1614									
.637			.0193							
.650							.0352			
.670									.0243	
.700		.0321				.0849				
.723										-.7831
.725					.1255					
.727	.0012									
.750							.4050	.2388		
.760				.1213						
.775					.4325	.3868				

AMES 11-073(OA148) -140A/B/C ORB LEFT WING TOP (XEBU7D)

ALPHA (2) = .058 BETA (3) = .180

SECTION (1)LEFT WING TOP SURF DEPENDENT VARIABLE CP

2Y/BW	.2350	.2990	.3640	.4270	.5340	.6730	.7800	.8870	.9720	1.0000
X/CW										
.793	.1656									
.798			.1192							
.808				.3642						
.834		.1102								
.839			.3409							
.850					.2281	.1919	.1937			
.857				.2191						
.862									.0175	
.865		.3569								
.879			.2198							
.900		.1708			.1305			.1316		
.905				.1319						
.919			.1175							
.950					.0755	.1426	.1213			
.953				.0646						
.955			.0571							
.965		.0826								

ALPHA (2) = .056 BETA (4) = 4.251 MACH = .59628 Q = 593.97 P = 2386.4 RN/L = 4.8452

SECTION (1)LEFT WING TOP SURF DEPENDENT VARIABLE CP

2Y/BW	.2350	.2990	.3640	.4270	.5340	.6730	.7800	.8870	.9720	1.0000
X/CW										
.000	-.1638	-.0456	.0323	.2462	.3798	.3114	.2723	.2813	-.2514	
.010		-.0560	.0537		.2486	.2797	.2440	.1285		
.020		-.0593		.0000	.1488	.1398	.1151	.0693	-.1948	
.040			.0793	.0468						
.041	-.1350									
.050					-.0589	-.0803	-.1024	-.1253		
.069									-.2464	
.080					-.2114					
.081				-.0676						
.086			.1023							
.094		-.0562								
.113	-.0833									
.150					-.3144	-.3449	-.3339	-.3351		
.157									-.2433	
.163			.0000							
.177				-.2247						
.229		.0337								
.245			-.1488							
.247	-.0266									
.250					-.3724	-.4064	-.4257	-.4496		

AMES 11-073(OA148) -140A/B/C ORB LEFT WING TOP (XE8U70)

ALPHA (2) = .056 BETA (4) = 4.251

SECTION (1)LEFT WING TOP SURF DEPENDENT VARIABLE CP

2Y/BW	.2350	.2990	.3640	.4270	.5340	.6730	.7800	.8870	.9720	1.0000
X/CW										
.274				-.2743						
.345									-.1373	
.382		-.0368								
.390			-.2251							
.400					-.2404	-.2751		-.2739		
.402				-.2374						
.418										-.1355
.429	.0059									
.497		-.2051								
.503									-.1032	
.547	-.1315									
.550					-.1000	-.1107				
.565				-.0620						
.600								-.0237		
.633	-.1842									
.637			-.0162							
.650							.0259			
.670									.0264	
.700		-.0044				.0700				
.723										-.6748
.725					.1045					
.727	-.0342									
.750							.3939	.2384		
.760				.0963						
.775					.4109	.2811				
.793	.1360									
.798			.0931							
.808				.3402						
.834		.0806								
.832			.3125							
.850					.2171	.1712	.1939			
.857				.1985						
.862									.0280	
.865		.3249								
.879			.1901							
.900		.1426			.1173			.1383		
.905				.1155						
.910			.0956							
.950					.0625	.1294	.1214			
.953				.0517						
.955			.0416							
.965		.0598								

DATE 11 FEB 76 TABULATED PRESSURE DATA - OA148 (AMES 11-073-1)

AMES 11-073(OA148) -140A/B/C ORB LEFT WING TOP (XEBU70)

ALPHA (2) = .051 BETA (5) = 8.306 MACH = .59628 Q = 593.97 P = 2386.4 RN/L = 4.8452

SECTION (1)LEFT WING TOP SURF DEPENDENT VARIABLE CP

2Y/BW	.2350	.2990	.3640	.4270	.5340	.6730	.7800	.8870	.9720	1.0000
X/CW										
.000	-.2114	-.1287	-.0311	.1986	.3489	.2764	.2363	.2322	-.2255	
.010		-.1204	.0076		.1433	.1910	.1617	.0468		
.020		-.1112		.0000	.0656	.0583	.0420	.0010	-.2276	
.040			.0446	-.0181						
.041	-.1695									
.050					-.1118	-.1263	-.1423	-.1655		
.069									-.2600	
.080					-.2489					
.081				-.1059						
.086			.0620							
.094		-.0730								
.113	-.1021									
.150					-.3346	-.3520	-.3401	-.3372		
.157									-.2425	
.163			.0000							
.177				-.2415						
.229		.0204								
.246			-.1645							
.247	-.0344									
.250					-.3779	-.4061	-.4245	-.4272		
.274				-.2920						
.345									-.1220	
.362		-.0502								
.390			-.2417							
.400					-.2571	-.2827		-.2734		
.402				-.2521						
.418										-.1330
.429	.0011									
.497		-.2205								
.503									-.0832	
.547	-.1430									
.550					-.1212	-.1227				
.565				-.0854						
.600								-.0193		
.633	-.2083									
.637			-.0533							
.650							.0216			
.670									.0342	
.700		-.0398				.0571				
.723										-.5671
.725					.0868					
.727	-.0662									
.750							.3837	.2421		
.760				.0887						
.775					.3932	.2667				

AMES 11-073(OA148) -140A/B/C ORB LEFT WING TOP (XE8U7D)

ALPHA (2) = .051 BETA (5) = 8.306

SECTION (1)LEFT WING TOP SURF DEPENDENT VARIABLE CP

2Y/BW	.2350	.2990	.3640	.4270	.5340	.6730	.7800	.8870	.9720	1.0000
X/CW										
.793	.1005									
.798			.0696							
.808				.3014						
.834		.0500								
.839			.2801							
.850					.2033	.1540	.1897			
.857				.1837						
.862									.0276	
.865		.3044								
.879			.1652							
.900		.1245			.1046			.1375		
.905				.1005						
.919			.0779							
.950					.0537	.1158	.1301			
.953				.0396						
.955			.0294							
.965		.0424								

ALPHA (3) = 4.000 BETA (1) = -7.698 MACH = .59578 Q = 593.03 P = 2388.8 RN/L = 4.8456

SECTION : 1)LEFT WING TOP SURF DEPENDENT VARIABLE CP

2Y/BW	.2350	.2990	.3640	.4270	.5340	.6730	.7800	.8870	.9720	1.0000
X/CW										
.000	-.0381	.0533	.1070	.4015	.6099	.5962	.5845	.5462	-.0248	
.010		.0096	.0973		.1384	.1917	.0921	-.1283		
.020		-.0127		.0000	-.0223	-.0578	-.1267	-.2101	-.3045	
.040			.1082	-.0837						
.041	-.0423									
.050					-.3008	-.3731	-.4092	-.4494		
.069									-.4048	
.080					-.4911					
.081				-.2551						
.086			.0783							
.094		-.0412								
.113	-.0329									
.150					-.5588	-.6245	-.8448	-.5960		
.157									-.5002	
.163			.0000							
.177				-.4215						
.229		.0253								
.246			-.2843							
.247	.0008									
.250					-.5261	-.6097	-.6658	-.7000		

AMES 11-073(OA148) -140A/B/C ORB LEFT WING TOP (XEBU70)

ALPHA (3) = 4.000 BETA (1) = -7.898

SECTION (1)LEFT WING TOP SURF DEPENDENT VARIABLE CP

2Y/BW	.2350	.2990	.3640	.4270	.5340	.6730	.7800	.8870	.9720	1.0000
X/CW										
.274				-.4085						
.345									-.3991	
.362		-.1162								
.390			-.3054							
.400					-.2477	-.3216		-.3818		
.402				-.2369						
.418										-.1579
.429	-.0049									
.497		-.2666								
.503									-.3601	
.547	-.1863									
.550					-.0275	-.0838				
.565				.0278						
.600								-.0819		
.633	-.1863									
.637			.0803							
.650							.0404			
.670									-.0649	
.700		.0794				.1176				
.723										-.1657
.725					.1815					
.727	.0449									
.750							.3990	.2169		
.760				.1923						
.775					.4143	.3445				
.793	.2555									
.798			.1981							
.808				.3710						
.834		.1867								
.839			.3796							
.850					.2655	.2483	.2059			
.857				.2744						
.862									.0198	
.865		.4375								
.879			.2767							
.900		.2602			.1776			.1451		
.905				.1908						
.919			.1832							
.950					.1185	.1886	.1493			
.953				.1165						
.955			.1172							
.965		.1493								

DATE 11 FEB 76 TABULATED PRESSURE DATA - OA148 (AMES 11-073-1) PAGE 505!

AMES 11-073(OA148) -140A/B/C ORB LEFT WING TOP (XEBU70)

ALPHA (3) = 4.002 BETA (2) = -3.861 MACH = .59578 Q = 593.03 P = 2386.8 RN/L = 4.8458

SECTION (1)LEFT WING TOP SURF DEPENDENT VARIABLE CP

2Y/BW	.2350	.2990	.3640	.4270	.5340	.6730	.7800	.8870	.9720	1.0000
X/CW										
.000	-.0953	-.0302	.0243	.3315	.5309	.5136	.4988	.4477	-.1060	
.010		-.0797	.0322		.0303	.0804	-.0251	-.2411		
.020		-.0809		.0000	-.1045	-.1473	-.2043	-.3085	-.3807	
.040			.0424	-.1556						
.041	-.1019									
.050					-.3580	-.4259	-.4739	-.4806		
.069									-.4490	
.080					-.5260					
.081				-.3038						
.086			.0281							
.094		-.0821								
.113	-.0686									
.150					-.5762	-.6445	-.6575	-.6177		
.157									-.4958	
.163			.0000							
.177				-.4487						
.229		-.0023								
.246			-.3129							
.247	-.0320									
.250					-.5429	-.6159	-.6597	-.6922		
.274				-.4214						
.345									-.3670	
.362		-.1439								
.390			-.3299							
.400					-.2798	-.3357		-.3738		
.402				-.2739						
.418										-.2773
.429	-.0346									
.437		-.2959								
.503									-.3252	
.547	-.2245									
.550					-.0659	-.1057				
.565				-.0126						
.600								-.0607		
.633	-.2267									
.637			.0314							
.650							.0322			
.570									-.0469	
.700		.0273				.0968				
.723										-.1592
.725					.1480					
.727	-.0077									
.750							.3941	.2224		
.760				.1506						
.775					.3823	.3178				

AMES 11-073(OA148) -140A/B/C ORB LEFT WING TOP (XEBU70)

ALPHA (3) = 4.002 BETA (2) = -3.861

SECTION (1)LEFT WING TOP SURF DEPENDENT VARIABLE CP

2Y/BW	.2350	.2990	.3640	.4270	.5340	.6730	.7800	.8870	.9720	1.0000
X/CW										
.793	.2122									
.798			.1620							
.808				.3418						
.834		.1525								
.839			.3442							
.850					.2454	.2241	.1972			
.857				.2489						
.862									.0297	
.865		.3839								
.879			.2450							
.900		.2193			.1597			.1421		
.905				.1604						
.919			.1549							
.950					.0968	.1693	.1473			
.953				.0941						
.955			.0909							
.965		.1290								

ALPHA (3) = 4.000 BETA (3) = .182 MACH = .59578 Q = 593.03 P = 2388.8 RN/L = 4.8458

SECTION (1)LEFT WING TOP SURF DEPENDENT VARIABLE CP

2Y/BW	.2350	.2990	.3640	.4270	.5340	.6730	.7800	.8870	.9720	1.0000
X/CW										
.000	-.1638	-.1414	-.0751	.2382	.4564	.4293	.4096	.3595	-.1763	
.010		-.1718	-.0487		-.0637	-.0063	-.0954	-.3031		
.020		-.1559		.0000	-.1820	-.2149	-.2705	-.3593	-.4049	
.040			-.0116	-.2127						
.041	-.1515									
.050					-.3937	-.4668	-.4996	-.5021		
.069									-.4575	
.080					-.5414					
.081				-.3223						
.085			-.0216							
.094		-.1131								
.113	-.1094									
.150					-.5695	-.6451	-.6433	-.5944		
.157									-.4701	
.163			.0000							
.177				-.4446						
.229		-.0244								
.245			-.3188							
.247	-.0584									
.250					-.5437	-.6035	-.6523	-.6605		

AMES 11-073(OA148) -140A/B/C ORB LEFT WING TOP (XEBU70)

ALPHA (3) = 4.000 BETA (3) = .182

SECTION (1)LEFT WING TOP SURF DEPENDENT VARIABLE CP

2Y/BW	.2350	.2990	.3640	.4270	.5340	.6730	.7800	.8870	.9720	1.0000
X/CW										
.274				-.4309						
.345									-.3208	
.362		-.1583								
.390			-.3422							
.400					-.3041	-.3472		-.3709		
.402				-.2975						
.418										-.3351
.429	-.0522									
.497		-.3145								
.503									-.2727	
.547	-.2451									
.550					-.0964	-.1239				
.565				-.0495						
.600								-.0485		
.633	-.2560									
.637			-.0134							
.650							.0228			
.670									-.0169	
.700		-.0149				.0809				
.723										-.1593
.725					.1217					
.727	-.0422									
.750							.3947	.2278		
.760				.1314						
.775					.3568	.2845				
.793	.1744									
.798			.1223							
.808				.3026						
.834		.1067								
.839			.3096							
.850					.2246	.2009	.1948			
.857				.2209						
.862									.0443	
.865		.3574								
.879			.2163							
.900		.1848			.1416			.1428		
.905				.1398						
.919			.1218							
.950					.0851	.1587	.1393			
.953				.0710						
.955			.0708							
.965		.0990								

AMES 11-073(OA148) -140A/B/C ORB LEFT WING TOP (XEBU70)

ALPHA (3) = 4.003 BETA (4) = 4.239 MACH = .59578 Q = 593.03 P = 2386.8 RN/L = 4.8456

SECTION (1)LEFT WING TOP SURF DEPENDENT VARIABLE CP

2Y/BW	.2350	.2990	.3640	.4270	.5340	.6730	.7800	.8870	.9720	1.0000
X/CW										
.000	-.2278	-.2560	-.2079	.1263	.3585	.3324	.3069	.2342	-.3188	
.010		-.2582	-.1333		-.1864	-.1322	-.2380	-.4492		
.020		-.2153		.0000	-.2741	-.3180	-.3872	-.4932	-.5104	
.040			-.0637	-.2597						
.041	-.1907									
.050					-.4547	-.5323	-.5826	-.5770		
.069									-.5168	
.080					-.5689					
.081				-.3552						
.086			-.0542							
.094		-.1273								
.113	-.1347									
.150					-.5801	-.6429	-.6618	-.6182		
.157									-.4800	
.163			.0000							
.177				-.4463						
.229		-.0417								
.246			-.3232							
.247	-.0781									
.250					-.5474	-.6017	-.6451	-.6553		
.274				-.4262						
.345									-.2979	
.362		-.1593								
.390			-.3351							
.400					-.3148	-.3544		-.3650		
.402				-.3097						
.418										-.5174
.429	-.0699									
.497		-.3298								
.503									-.2509	
.547	-.2550									
.550					-.1105	-.1405				
.565				-.0884						
.600								-.0444		
.633	-.2744									
.637			-.0892							
.650							.0156			
.670									.0044	
.700		-.0448				.0819				
.723										-.1499
.725					.1004					
.727	-.0658									
.750							.3882	.2380		
.760				.0907						
.775					.2934	.2498				

AMES 11-073(OA148) -140A/B/C ORB LEFT WING TOP (XEBU7D)

ALPHA (3) = 4.003 BETA (4) = 4.239

SECTION (1)LEFT WING TOP SURF DEPENDENT VARIABLE CP

2Y/BW	.2350	.2990	.3640	.4270	.5340	.6730	.7800	.8870	.9720	1.0000
X/CW										
.793	.1380									
.798			.0781							
.808				.2398						
.834		.0656								
.835			.3046							
.850					.2025	.1765	.1928			
.857				.1772						
.862									.0540	
.865		.3684								
.879			.1913							
.900		.1441			.1287			.1450		
.905				.1069						
.919			.0991							
.950					.0700	.1382	.1423			
.953				.0580						
.955			.0460							
.985		.0663								

ALPHA (3) = 4.009 BETA (5) = 8.292 MACH = .59573 Q = 593.03 P = 2386.8 RN/L = 4.8458

SECTION (1)LEFT WING TOP SURF DEPENDENT VARIABLE CP

2Y/BW	.2350	.2990	.3640	.4270	.5340	.6730	.7800	.8870	.9720	1.0000
X/CW										
.000	-.3134	-.4048	-.2322	-.0360	.2334	.2127	.1934	.1199	-.4503	
.010		-.3305	-.1272		-.3037	-.2562	-.3476	-.5287		
.020		-.2511		.0000	-.3722	-.3989	-.4646	-.5680	-.5515	
.040			-.1035	-.3064						
.041	-.2322									
.050					-.5028	-.5579	-.6079	-.6233		
.069									-.5186	
.080					-.5912					
.081				-.3569						
.086			-.1189							
.094		-.2231								
.113	-.1664									
.150					-.5800	-.6316	-.6493	-.6049		
.157									-.4548	
.163			.0000							
.177				-.4164						
.229		-.0338								
.245			-.3810							
.247	-.0811									
.250					-.5366	-.5890	-.6276	-.6358		

AMES 11-073(OA148) -140A/B/C ORB LEFT WING TOP (XEBU70)

ALPHA (3) = 4.009 BETA (5) = 8.292

SECTION (1)LEFT WING TOP SURF DEPENDENT VARIABLE CP

2Y/DW	.2350	.2990	.3640	.4270	.5340	.6730	.7800	.8870	.9720	1.0000
X/CW										
.274				-.4150						
.345									-.2658	
.362		-.1548								
.390			-.3458							
.400					-.3209	-.3637		-.3514		
.402				-.3281						
.418										-.6348
.429	-.0717									
.497		-.3341								
.503									-.1981	
.547	-.2597									
.550					-.1392	-.1483				
.565				-.1547						
.600								-.0411		
.633	-.2874									
.637			-.0729							
.650							.0041			
.670									.0189	
.700		-.0712				.0438				
.723										-.1573
.725					.0690					
.727	-.0946									
.750							.3574	.2355		
.760				.0153						
.775					.2514	.1945				
.793	.0884									
.798			.0681							
.808				.2840						
.814		.0331								
.818			.2718							
.850					.1786	.1545	.1854			
.857				.1756						
.862									.0639	
.865		.3193								
.879			.1628							
.900		.1204			.1049			.1405		
.905				.1079						
.919			.0811							
.950					.0585	.1246	.1277			
.953				.0614						
.955			.0383							
.965		.0519								

AMES 11-073(OA148) -140A/B/C ORB LEFT WING TOP (XEBU70)

ALPHA (4) = 7.945 BETA (1) = -7.890 MACH = .59630 Q = 593.97 P = 2386.4 RN/L = 4.8482

SECTION (1)LEFT WING TOP SURF DEPENDENT VARIABLE CP

2Y/BW	.2350	.2990	.3640	.4270	.5340	.6730	.7800	.8870	.9720	1.0000
X/CW										
.000	-.0731	-.1298	-.1606	.2041	.4249	.3948	.3325	.1626	-.4449	
.010		-.2169	-.1633		-.4822	-.4697	-.6707	-1.0474		
.020		-.2006		.0000	-.6132	-.7328	-.8746	-1.1020	-1.0053	
.040			-.1293	-.5001						
.041	-.0908									
.050					-.8393	-.9890	-1.0909	-1.1766		
.069									-.9939	
.080					-.9889					
.081				-.6355						
.086			-.1486							
.094		-.1371								
.113	-.0771									
.150					-.8856	-1.0102	-1.0575	-.9837		
.157									-1.0263	
.163			.0000							
.177				-.6789						
.229		-.0597								
.246			-.4966							
.247	-.0506									
.250					-.6995	-.8034	-.9071	-.9728		
.274				-.5533						
.345									-.7722	
.362		-.2480								
.390			-.4142							
.400					-.3014	-.3942		-.5160		
.402				-.2920						
.418										-1.0233
.429	-.1014									
.497		-.3955								
.503									-.6699	
.547	-.3202									
.550					-.0117	-.1007				
.565				-.0119						
.600								-.1318		
.633	-.2805									
.637			.0098							
.650							.0140			
.670									-.3341	
.700		.0356				.1090				
.723										-.4440
.725					.1671					
.727	.0265									
.750							.3697	.1782		
.760				.1386						
.775					.2748	.2914				

ORIGINAL PAGE IS OF POOR QUALITY

AMES 11-073(OA148) -140A/B/C ORB LEFT WING TOP (XE8U70)

ALPHA (4) = 7.945 BETA (1) = -7.890

SECTION (1)LEFT WING TOP SURF DEPENDENT VARIABLE CP

2Y/BW	.2350	.2990	.3640	.4270	.5340	.6730	.7800	.8870	.9720	1.0000
X/CW										
.793	.2883									
.798			.1786							
.808				.2684						
.834		.1924								
.839			.3703							
.850					.2449	.2522	.1901			
.857				.2342						
.862									-.1688	
.865		.4376								
.879			.2775							
.900		.2618			.1796			.1217		
.905				.1790						
.919			.1904							
.950					.1201	.1986	.1428			
.953				.1281						
.955			.1314							
.965		.1656								

ALPHA (4) = 7.956 BETA (2) = -3.860 MACH = .59630 Q = 593.97 P = 2388.4 RN/L = 4.8482

SECTION (1)LEFT WING TOP SURF DEPENDENT VARIABLE CP

2Y/BW	.2350	.2990	.3640	.4270	.5340	.6730	.7800	.8870	.9720	1.0000
X/CW										
.000	-.1508	-.2824	-.3450	.0353	.2884	.2469	.1753	.0003	-.6824	
.010		-.3517	-.2635		-.6185	-.6237	-.8338	-1.2010		
.020		-.2959		.0000	-.7221	-.8324	-.9926	-1.2172	-1.1079	
.040			-.2132	-.5719						
.041	-.1551									
.050					-.8916	-1.0449	-1.1765	-1.2367		
.069									-1.0371	
.080					-1.0206					
.081				-.6681						
.086			-.2047							
.094		-.1775								
.113	-.1246									
.150					-.8886	-1.0213	-1.0648	-.9867		
.157									-1.0090	
.163			.0000							
.177				-.6895						
.229		-.0856								
.245			-.5053							
.247	-.0869									
.250					-.7164	-.8090	-.8740	-.9605		

AMES 11-073(OA148) -140A/B/C ORB LEFT WING TOP (XEBU70)

ALPHA (4) = 7.956 BETA (2) = -3.860

SECTION (1)LEFT WING TOP SURF DEPENDENT VARIABLE CP

2Y/BW	.2350	.2990	.3640	.4270	.5340	.6730	.7800	.8870	.9720	1.0000
X/CW										
.274				-.5696						
.345									-.7189	
.362		-.2739								
.390			-.4265							
.400					-.3211	-.4134		-.5147		
.402				-.3160						
.418										-1.2872
.429	-.1211									
.497		-.4391								
.503									-.6088	
.547	-.3478									
.550					-.0413	-.1191				
.565				-.0611						
.600								-.1252		
.633	-.3110									
.637			-.0313							
.650							.0039			
.670									-.2909	
.700		-.0334				.0849				
.723										-.4683
.725					.1282					
.727	-.0224									
.750							.3624	.1875		
.760				.1078						
.775					.1962	.2413				
.793	.2306									
.798			.1255							
.808				.2743						
.834		.1592								
.839			.3137							
.850					.1950	.2297	.1818			
.857				.2176						
.862									-.1650	
.865		.4799								
.879			.2253							
.900		.2360			.1314			.1169		
.905				.1570						
.919			.1425							
.950					.0830	.1851	.1354			
.953				.1046						
.955			.1003							
.965		.1437								

AMES 11-073(OA148) -140A/B/C ORB LEFT WING TOP (XEBU7D)

ALPHA (4) = 7.955 BETA (3) = .181 MACH = .59630 Q = 593.97 P = 2388.4 RN/L = 4.8482

SECTION (1)LEFT WING TOP SURF DEPENDENT VARIABLE CP

2Y/BW	.2350	.2990	.3640	.4270	.5340	.6730	.7800	.8870	.9720	1.0000
X/CW										
.000	-.2517	-.4725	-.5142	-.1296	.1603	.1037	.0354	-.1380	-.8741	
.010		-.4696	-.3702		-.7216	-.7295	-.9408	-1.2652		
.020		-.3816		.0000	-.7817	-.9135	-1.0531	-1.2556	-1.1337	
.040			-.2306	-.6061						
.041	-.2106									
.050					-.9023	-1.0576	-1.1686	-1.2264		
.069									-1.0090	
.080					-.9950					
.081				-.6709						
.086			-.2033							
.094		-.2042								
.113	-.1799									
.150					-.8549	-.9924	-1.0243	-.9493		
.157									-.8996	
.163			.0000							
.177				-.6596						
.229		-.1555								
.246			-.4917							
.247	-.1003									
.250					-.7002	-.7975	-.8480	-.9100		
.274				-.5486						
.345									-.6272	
.362		-.3274								
.390			-.4542							
.400					-.3365	-.4071		-.4846		
.402				-.3531						
.418										-1.4507
.419	-.1237									
.497		-.4656								
.503									-.5226	
.547	-.3729									
.550					-.0995	-.1245				
.565				-.1200						
.600								-.1129		
.633	-.3344									
.637			-.1100							
.650							-.0012			
.670									-.2003	
.700		-.0130				.0723				
.723										-.3790
.725					.0836					
.727	-.0631									
.750							.3580	.2031		
.760				.0788						
.775					.1815	.1849				

AMES 11-073(OA148) -140A/B/C ORB LEFT WING TOP (XEBU70)

ALPHA (4) = 7.955 BETA (3) = .181

SECTION (1)LEFT WING TOP SURF DEPENDENT VARIABLE CP

2Y/BW	.2350	.2990	.3640	.4270	.5340	.6730	.7800	.8870	.9720	1.0000
X/CW										
.793	.1649									
.798			.0782							
.808				.2585						
.834		.1038								
.839			.3428							
.850					.1661	.2003	.1830			
.857				.1613						
.862									-.0614	
.865		.4066								
.879			.2354							
.900		.1883			.1198			.1255		
.905				.0914						
.919			.1457							
.950					.0932	.1662	.1382			
.953				.0375						
.955			.0987							
.965		.1120								

ALPHA (4) = 7.955 BETA (4) = 4.234 MACH = .59630 Q = 593.97 P = 2386.4 RN/L = 4.8482

SECTION (1)LEFT WING TOP SURF DEPENDENT VARIABLE CP

2Y/BW	.2350	.2990	.3640	.4270	.5340	.6730	.7800	.8870	.9720	1.0000
X/CW										
.000	-.3417	-.6119	-.5067	-.2981	-.0014	-.0605	-.1449	-.3671	-1.2282	
.010		-.4891	-.2572		-.8373	-.8499	-1.1036	-1.4373		
.020		-.3509		.0000	-.8636	-1.0056	-1.1761	-1.4337	-1.2786	
.040			-.2246	-.5843						
.041	-.2737									
.050					-.9311	-1.0847	-1.2249	-1.3068		
.069									-1.0596	
.080					-.9844					
.081				-.6024						
.086			-.2461							
.094		-.3731								
.113	-.2242									
.150					-.8290	-.9513	-.9851	-.9311		
.157									-.8726	
.163			.0000							
.177				-.5947						
.229		-.2007								
.246			-.5785							
.247	-.1079									
.250					-.6793	-.7755	-.8303	-.8776		

AMES 11-073(OA148) -140A/B/C ORB LEFT WING TOP (XEBU70)

ALPHA (4) = 7.955 BETA (4) = 4.234

SECTION (1)LEFT WING TOP SURF DEPENDENT VARIABLE CP

2Y/BW	.2350	.2990	.3640	.4270	.5340	.6730	.7800	.8870	.9720	1.0000
X/CW										
.274				-.5530						
.345									-.5928	
.362		-.2347								
.390			-.5864							
.400					-.3441	-.4095		-.4578		
.402				-.3698						
.418										-1.7967
.429	-.1296									
.497		-.4367								
.503									-.4874	
.547	-.3813									
.550					-.1732	-.1313				
.565				-.1489						
.600								-.1102		
.633	-.3502									
.637			-.0858							
.650							-.0085			
.670									-.2390	
.700		-.0601				.0353				
.723										-.3710
.725					.0707					
.727	-.0877									
.750							.2636	.2074		
.760				-.0226						
.775					.3202	.1373				
.793	.1137									
.798			.0636							
.808				.2225						
.834		.0677								
.839			.3184							
.850					.2032	.1339	.1685			
.857				.1359						
.862									-.0573	
.865		.3405								
.879			.1999							
.900		.1548			.1315			.1119		
.905				.0914						
.919			.1122							
.950					.0948	.1259	.1115			
.953				.0591						
.955			.0653							
.965		.0814								

AMES 11-073(OA148) -140A/B/C ORB LEFT WING TOP (XEBU70)

ALPHA (4) = 7.954 BETA (5) = 8.280 MACH = .59630 Q = 593.97 P = 2386.4 RN/L = 4.8482

SECTION (1)LEFT WING TOP SURF DEPENDENT VARIABLE CP

2Y/BW	.2350	.2990	.3640	.4270	.5340	.6730	.7800	.8870	.9720	1.0000
X/CW										
.000	-.4553	-.7024	-.3547	-.4710	-.1971	-.2342	-.3170	-.5400	-1.5121	
.010		-.4061	-.3017		-.9681	-1.0143	-1.2374	-1.5121		
.020		-.3864		.0000	-.9220	-1.0861	-1.2257	-1.5200	-1.2590	
.040			-.3057	-.4797						
.041	-.3778									
.050					-.9268	-1.1023	-1.2231	-1.3095		
.069									-1.0314	
.080					-.9420					
.081				-.5428						
.086			-.3373							
.094		-.4078								
.113	-.2217									
.150					-.7657	-.9155	-.9516	-.8967		
.157									-.7958	
.163			.0000							
.177				-.5641						
.229		-.2935								
.246			-.7443							
.247	-.1376									
.250					-.6065	-.7340	-.7895	-.8154		
.274				-.5544						
.345									-.5392	
.362		-.2097								
.390			-.4838							
.400					-.3968	-.3741		-.4124		
.402				-.5187						
.418										-1.8440
.429	-.1418									
.497		-.4399								
.503									-.4871	
.547	-.3795									
.550					-.1649	-.1492				
.565				-.2628						
.600								-.0768		
.633	-.3605									
.637			-.1018							
.650							-.0050			
.670									-.0907	
.700		-.0956				-.0010				
.723										-.3337
.725					.0555					
.727	-.1193									
.750							.1529	.1906		
.760				-.0076						
.775					.1973	.1251				

AMES 11-073(OA148) -140A/B/C ORB LEFT WING TOP (XE8U70)

ALPHA (4) = 7.954 BETA (5) = 8.280

SECTION (1)LEFT WING TOP SURF DEPENDENT VARIABLE CP

2Y/BW	.2350	.2990	.3640	.4270	.5340	.6730	.7800	.8870	.9720	1.0000
X/CW										
.793	.0664									
.798			.0443							
.808				.2956						
.834		.0260								
.839			.2926							
.850					.0830	.1139	.1539			
.857				.1821						
.862									-.0031	
.865		.2954								
.879			.1778							
.900		.1310			-.0143			.1167		
.905				.1199						
.919			.0973							
.950					-.0438	.1434	.0951			
.953				.0836						
.955			.0542							
.965		.0655								

ALPHA (5) = 11.925 BETA (1) = -7.848 MACH = .59584 Q = 593.15 P = 2386.7 RN/L = 4.8434

SECTION (1)LEFT WING TOP SURF DEPENDENT VARIABLE CP

2Y/BW	.2350	.2990	.3640	.4270	.5340	.6730	.7800	.8870	.9720	1.0000
X/CW										
.000	-.1465	-.4804	-.7254	-.2960	-.2515	-.1495	-.4928	-.7568	-1.9333	
.010		-.5867	-.6152		-1.5582	-1.6175	-2.0491	-2.4699		
.020		-.4672		.0000	-1.5211	-1.7750	-2.1519	-2.5700	-2.4233	
.040			-.4595	-1.0036						
.041	-.1506									
.050					-1.5501	-1.8697	-2.1844	-2.4370		
.069									-1.8366	
.080					-1.5585					
.081				-1.0451						
.086			-.4177							
.094		-.2157								
.113	-.1577									
.150					-1.1460	-1.3115	-1.3431	-1.2383		
.157									-1.4323	
.163			.0000							
.177				-.8875						
.229		-.1785								
.245			-.6870							
.247	-.0864									
.250					-.7910	-.9737	-1.0388	-1.1499		

AMES 11-073(OA148) -140A/B/C ORB LEFT WING TOP (XEBU70)

ALPHA (5) = 11.925 BETA (1) = -7.848

SECTION (1)LEFT WING TOP SURF DEPENDENT VARIABLE CP

2Y/BW	.2350	.2990	.3640	.4270	.5340	.6730	.7800	.8870	.9720	1.0000
X/CW										
.274				-.6242						
.345									-1.1658	
.362		-.4411								
.390			-.5463							
.400					-.3556	-.4090		-.5709		
.402				-.3806						
.418										-1.8405
.429	-.1697									
.497		-.6372								
.503									-1.0693	
.547	-.4533									
.550					-.1674	-.1069				
.565				-.1275						
.600								-.2460		
.633	-.3605									
.637			-.0204							
.650							-.0453			
.670									-.7128	
.700		-.0338				.0177				
.723										-.6689
.725					.0227					
.727	-.0679									
.750							.0998	.0520		
.760				.1161						
.775					.1931	.1409				
.793	.2812									
.798			.0653							
.808				.2848						
.834		.1989								
.839			.2866							
.850					.1885	.1397	.1168			
.857				.1860						
.862									-.4773	
.865		.5390								
.879			.2374							
.900		.3208			.1570			.0503		
.905				.0618						
.919			.1874							
.950					.1428	.1421	.1122			
.953				.0588						
.955			.1571							
.965		.2067								

AMES 11-073(OA148) -140A/B/C ORB LEFT WING TOP (XEBU70)

ALPHA (5) = 11.942 BETA (2) = -3.851 MACH = .59584 Q = 593.15 P = 2386.7 RN/L = 4.8434

SECTION (1)LEFT WING TOP SURF DEPENDENT VARIABLE CP

2Y/BW	.2350	.2990	.3640	.4270	.5340	.6730	.7800	.8870	.9720	1.0000
X/CW										
.000	-.2660	-.7077	-.8522	-.5099	-.2356	-.3458	-.4918	-.7544	-1.9215	
.010		-.7086	-.5519		-1.5515	-1.6101	-2.0519	-2.4642		
.020		-.5192		.0000	-1.5019	-1.7981	-2.1613	-2.5552	-2.4263	
.040			-.3288	-.9952						
.041	-.2575									
.050					-1.5341	-1.8544	-2.1653	-2.4339		
.069									-1.8317	
.080					-1.5575					
.091				-.9851						
.096			-.3469							
.094		-.3565								
.113	-.2330									
.150					-1.1369	-1.3152	-1.3486	-1.2444		
.157									-1.4329	
.163			.0000							
.177				-.8201						
.229		-.4154								
.246			-.6932							
.247	-.1157									
.250					-.7992	-.9691	-1.0443	-1.1813		
.274				-.6908						
.345									-1.1584	
.362		-.5867								
.390			-.5579							
.400					-.3575	-.4137		-.5781		
.402				-.4700						
.418										-1.9445
.429	-.1868									
.497		-.6269								
.503									-1.0746	
.547	-.4905									
.550					-.1721	-.1091				
.565				-.0613						
.600								-.2128		
.633	-.4014									
.637			-.1671							
.650							-.0478			
.670									-.7191	
.700		-.0278				.0194				
.723										-.6870
.725					.0219					
.727	-.0687									
.750							.0986	.0576		
.760				.1006						
.775					.1923	.1362				

AMES 11-073(OA148) -140A/B/C ORB LEFT WING TOP (XEBU70)

ALPHA (5) = 11.942 BETA (2) = -3.851

SECTION (1)LEFT WING TOP SURF DEPENDENT VARIABLE CP

2Y/BW	.2350	.2990	.3640	.4270	.5340	.6730	.7800	.8870	.9720	1.0000
X/CW										
.793	.1879									
.798			.0436							
.808				.2519						
.834		.1282								
.839			.3071							
.850					.1859	.1350	.1210			
.857				.1335						
.862									-.4763	
.865		.4481								
.879			.2118							
.900		.2556			.1531			.0491		
.905				.0624						
.919			.1452							
.950					.1356	.1428	.0957			
.953				.0059						
.955			.1173							
.965		.1711								

ALPHA (5) = 11.947 BETA (3) = .182 MACH = .59584 Q = 593.15 P = 2386.7 RN/L = 4.8434

SECTION (1)LEFT WING TOP SURF DEPENDENT VARIABLE CP

2Y/BW	.2350	.2990	.3640	.4270	.5340	.6730	.7800	.8870	.9720	1.0000
X/CW										
.000	-.4040	-.8817	-.8535	-.7377	-.4215	-.5352	-.6858	-.9468	-2.2680	
.010		-.6191	-.4197		-1.6752	-1.7867	-2.1907	-2.6147		
.020		-.4671		.0000	-1.5557	-1.8850	-2.3028	-2.7023	-2.1241	
.040			-.3775	-.8821						
.041	-.3475									
.050					-1.4969	-1.8380	-2.1553	-2.5155		
.069									-1.6183	
.080					-1.4556					
.081				-.8301						
.086			-.4342							
.094		-.5043								
.113	-.2302									
.150					-1.0569	-1.2746	-1.3093	-1.2005		
.157									-1.3514	
.163			.0000							
.177				-.8165						
.229		-.6586								
.246			-.7633							
.247	-.1533									
.250					-.7180	-.9092	-.9802	-1.0459		

AMES 11-073(OA148) -140A/B/C ORB LEFT WING TOP (XEBU7D)

ALPHA (5) = 11.947 BETA (3) = .182

SECTION (1)LEFT WING TOP SURF DEPENDENT VARIABLE CP

2Y/BW	.2350	.2990	.3640	.4270	.5340	.6730	.7800	.8870	.9720	1.0000
X/CW										
.274				-.7118						
.345									-1.0170	
.362		-.5205								
.390			-.6602							
.400					-.4304	-.3619		-.4960		
.402				-.4288						
.418										-1.4792
.429	-.2283									
.497		-.6342								
.503									-.9784	
.547	-.5036									
.550					-.2587	-.1591				
.565				-.1632						
.600								-.1800		
.633	-.4220									
.637			-.2082							
.650							-.0832			
.670									-.6665	
.700		-.0594				-.0238				
.723										-.4873
.725					.0906					
.727	-.1022									
.750							.0363	-.0294		
.760				-.0533						
.775					.2719	.0601				
.793	.1399									
.798			.0415							
.808				.1285						
.834		.0982								
.839			.3347							
.850					.1968	.0425	.0838			
.857				.0364						
.862									-.4067	
.865		.3962								
.879			.2285							
.900		.2219			.1353			.0321		
.905				-.0019						
.919			.1554							
.950					.1075	.0877	.0911			
.953				-.0204						
.955			.1179							
.965		.1466								

AMES 11-073(OA148) -140A/B/C DR9 LEFT WING TOP (XEBU70)

ALPHA (5) = 11.942 BETA (4) = 4.245 MACH = .59584 Q = 593.15 P = 2386.7 RN/L = 4.8434

SECTION (1)LEFT WING TOP SURF DEPENDENT VARIABLE CP

2Y/BW	.2350	.2990	.3640	.4270	.5340	.6730	.7800	.8870	.9720	1.0000
X/CW										
.000	-.5207	-.9518	-.5859	-.8387	-.5994	-.7419	-.9055	-1.1814	-2.4444	
.010		-.5399	-.4518		-1.7117	-1.9343	-2.3460	-2.7153		
.020		-.5150		.0000	-1.5640	-1.9821	-2.4796	-2.7329	-1.5782	
.040			-.4523	-.7118						
.041	-.4867									
.050					-1.4202	-1.7949	-2.2473	-2.5402		
.069									-1.4574	
.080					-1.3390					
.081				-.7729						
.086			-.4855							
.094		-.5631								
.113	-.2569									
.150					-.9427	-1.1902	-1.2479	-1.1524		
.157									-1.3416	
.163			.0000							
.177				-.7778						
.229		-.6807								
.246			-.8140							
.247	-.1981									
.250					-.7115	-.8221	-.9048	-.9153		
.274				-.6930						
.345									-1.1435	
.362		-.4621								
.390			-.7910							
.400					-.4816	-.3914		-.4189		
.402				-.5480						
.418										-1.1008
.429	-.2416									
.497		-.5742								
.503									-.9553	
.547	-.4992									
.550					-.2003	-.2396				
.565				-.4083						
.600								-.1445		
.633	-.4368									
.637			-.1464							
.650							-.1462			
.670									-.6443	
.700		-.0884				-.0724				
.723										-.3601
.725					.0330					
.727	-.1211									
.750							.0091	-.0703		
.760				-.0698						
.775					.1464	.0975				

AMES 11-073(OA148) -140A/B/C ORB LEFT WING TOP (XEBU7D)

ALPHA (5) = 11.942 BETA (4) = 4.245

SECTION (1)LEFT WING TOP SURF DEPENDENT VARIABLE CP

2Y/BW	.2350	.2990	.3640	.4270	.5340	.6730	.7600	.8870	.9720	1.0000
X/CW										
.793	.0960									
.798			.0533							
.809				.1989						
.834		.0591								
.839			.3304							
.850					.0387	.0749	.0488			
.857				.1405						
.862									-.3476	
.865		.3414								
.879			.2299							
.900		.1830			-.0552			-.0540		
.905				.1120						
.919			.1460							
.950					-.0815	.1167	.0704			
.953				.0968						
.955			.1101							
.965		.1096								

ALPHA (5) = 11.935 BETA (5) = 8.309 MACH = .59584 Q = 593.15 P = 2386.7 RN/L = [illegible]

SECTION (1)LEFT WING TOP SURF DEPENDENT VARIABLE CP

2Y/BW	.2350	.2990	.3640	.4270	.5340	.6730	.7800	.8870	.9720	1.0000
X/CW										
.000	-.6741	-1.0718	-.5455	-.9052	-.9148	-.9951	-1.1521	-1.4060	-2.2367	
.010		-.5807	-.4963		-1.7510	-2.1097	-2.5647	-2.5582		
.020		-.5904		.0000	-1.5136	-2.0718	-2.5735	-2.5729	-1.3714	
.040			-.5039	-.7068						
.041	-.6695									
.050					-1.3030	-1.7382	-2.1292	-2.1737		
.059									-1.2718	
.080					-1.1742					
.081				-.7411						
.086			-.5427							
.094		-.6075								
.113	-.3371									
.150					-.8390	-1.1189	-1.1835	-1.2463		
.157									-1.0879	
.162			.0000							
.177				-.7477						
.229		-.9012								
.245			-.9667							
.247	-.2455									
.250					-.7390	-.7290	-.8132	-.8220		

AMES 11-073(OA148) -140A/B/C ORB LEFT WING TOP (XEBU70)

ALPHA (5) = 11.935 BETA (5) = 8.309

SECTION (1)LEFT WING TOP SURF DEPENDENT VARIABLE CP

2Y/BW	.2350	.2990	.3640	.4270	.5340	.6730	.7800	.8870	.9720	1.0000
X/CW										
.274				-.7255						
.345									-1.0402	
.362		-.3800								
.390			-.6798							
.400					-.4523	-.4556		-.3493		
.402				-.7241						
.418										-.8120
.429	-.2332									
.477		-.5753								
.503									-.8937	
.547	-.4767									
.550					-.2766	-.2894				
.565				-.4089						
.600								-.1341		
.623	-.4410									
.637			-.1743							
.650							-.1942			
.670									-.6052	
.700		-.1270				-.1002				
.723										-.3336
.725					-.0971					
.727	-.1329									
.750							-.0160	-.0897		
.760				-.0477						
.775					-.0191	.0796				
.793	.0520									
.798			.0339							
.808				.2264						
.834		.0104								
.835			.2798							
.850					-.1233	.0291	.0364			
.857				.1619						
.862									-.2835	
.865		.2829								
.879			.1951							
.900		.1367			-.1882			-.0824		
.905				.1295						
.919			.1246							
.950					-.1588	.0620	.0574			
.953				.1010						
.955			.0858							
.965		.0786								

ORIGINAL PAGE IS
OF POOR QUALITY

AMES 11-073(OA148) -140A/B/C ORB LEFT WING TOP (XEBU71) (05 AUG 75)

REFERENCE DATA

SREF = 2690.0000 SQ.FT. XMRP = 1076.6800 IN. XO
LREF = 474.8000 IN. YMRP = .0000 IN. YO
BREF = 935.0680 IN. ZMRP = 375.0000 IN. ZO
SCALE = .0300

PARAMETRIC DATA

RUDDER = -5.000 SPOBRK = 55.000
BDFLAP = 16.300 L-ELVN = -10.000
R-ELVN = -10.000 MACH = 1.400

ALPHA (1) = -3.946 BETA (1) = -3.857 MACH = 1.3971 Q = 600.47 P = 439.47 RN/L = 2.9096

SECTION (1)LEFT WING TOP SURF DEPENDENT VARIABLE CP

2Y/BW	.2350	.2990	.3640	.4270	.5340	.6730	.7800	.8870	.9720	1.0000
X/CW										
.000	-.1301	-.0945	-.0924	.2974	.7116	.6621	.6149	.6376	-.3124	
.010		-.0279	.0088		.7545	.7428	.7032	.6317		
.020		-.0210		.0000	.6723	.6391	.6142	.5905	.0181	
.040			.0616	.3927						
.041	-.0410									
.050					.4631	.4319	.4142	.4084		
.059									-.0328	
.080					.2811					
.091				.3062						
.086			.1728							
.094		-.0170								
.113	-.0239									
.150					.0519	.0610	.1009	.1217		
.157									-.1697	
.163			.0000							
.177				.1161						
.229		.0603								
.246			.1006							
.247	-.0232									
.250					-.0816	-.0935	-.0830	-.0851		
.274				-.0140						
.345									-.2092	
.362		.1463								
.390			-.0101							
.400					-.2077	-.2544		-.2820		
.402				-.1739						
.418										-.3815
.429	.0597									
.497		.0045								
.503									-.2468	
.547	.0780									
.550					-.2595	-.2976				
.565				-.1744						
.600								-.3480		
.633	-.0246									
.637			-.1424							
.650							-.2198			
.670									-.1150	

AMES 11-073(OA148) -140A/B/C ORB LEFT WING TOP (XE8U71)

ALPHA (1) = -3.946 BETA (1) = -3.857

SECTION (1)LEFT WING TOP SURF DEPENDENT VARIABLE CP

2Y/BW	.2350	.2990	.3640	.4270	.5340	.6730	.7800	.8870	.9720	1.0000
X/CW										
.700		-.1192				-.0108				
.723										-.4488
.725					.1111					
.727	-.0999									
.750							.0504	-.0635		
.760				.2498						
.775					.1899	-.0144				
.793	.2478									
.798			.2676							
.808				.5865						
.834		.1896								
.839			.6631							
.850					.5634	.0940	.0985			
.857				.6801						
.862									-.0682	
.865		.6333								
.879			.6337							
.900		.5390			.6654			.1507		
.905				.5861						
.919			.5409							
.950					.5930	.5980	.1006			
.953				.5281						
.955			.5074							
.965		.5182								

ALPHA (1) = -3.940 BETA (2) = .190 MACH = 1.3971 Q = 600.47 P = 439.47 RN/L = 2.9096

SECTION (1)LEFT WING TOP SURF DEPENDENT VARIABLE CP

2Y/BW	.2350	.2990	.3640	.4270	.5340	.6730	.7800	.8870	.9720	1.0000
X/CW										
.000	-.1592	-.0561	-.0508	.2645	.6392	.5680	.5244	.5360	-.3786	
.010		-.0424	.0037		.6671	.6498	.6119	.5452		
.020		-.0571		.0000	.5909	.5559	.5330	.5070	-.0655	
.040			.0377	.3167						
.041	-.1066									
.050					.3983	.3662	.3493	.3462		
.069									-.1050	
.080					.2231					
.081				.2442						
.086			.1339							
.094		-.0462								
.113	-.0910									
.150					.0255	.0296	.0633	.0898		

AMES 11-073(OA148) -140A/B/C ORB LEFT WING TOP (XEBU71)

ALPHA (1) = -3.940 BETA (2) = .190

SECTION (1)LEFT WING TOP SURF DEPENDENT VARIABLE CP

2Y/BW	.2350	.2990	.3640	.4270	.5340	.6730	.7800	.8870	.9720	1.0000
X/CW										
.157									-.2224	
.163			.0000							
.177				.0902						
.229		.0375								
.246			.0683							
.247	-.0505									
.250					-.0946	-.1038	-.1049	-.1092		
.274				-.0253						
.345									-.2452	
.362		.1158								
.390			-.0231							
.400					-.2077	-.2535		-.2899		
.402				-.1823						
.418										-.4498
.429	.0315									
.497		-.0262								
.503									-.2633	
.547	.0503									
.550					-.2523	-.2864				
.565				-.1657						
.600								-.3431		
.633	-.0624									
.637			-.0504							
.650							-.2284			
.670									-.1207	
.700		-.0787				.0032				
.723										-.5192
.725					.1414					
.727	-.0966									
.750							.0460	-.0324		
.760				.1493						
.775					.3476	.0526				
.793	.2941									
.798			.1387							
.808				.6220						
.834		.1034								
.839			.6064							
.850					.6131	.3255	.1228			
.857				.5955						
.862									-.0023	
.865		.5561								
.879			.5511							
.900		.4714			.5720			.1372		
.905				.5206						
.919			.4784							

AMES 11-073(OA148) -140A/B/C ORB LEFT WING TOP (XEBU71)

ALPHA (1) = -3.940 BETA (2) = .190

SECTION (1)LEFT WING TOP SURF DEPENDENT VARIABLE CP

2Y/BW	.2350	.2990	.3640	.4270	.5340	.6730	.7800	.8870	.9720	1.0000
X/CW										
.950					.5256	.5849	.1591			
.953				.4698						
.955			.4457							
.965		.4487								

ALPHA (1) = -3.946 BETA (3) = 4.272 MACH = 1.3971 Q = 600.47 P = 439.47 RN/L = 2.9098

SECTION (1)LEFT WING TOP SURF DEPENDENT VARIABLE CP

2Y/BW	.2350	.2990	.3640	.4270	.5340	.6730	.7800	.8870	.9720	1.0000
X/CW										
.000	-.1659	-.0776	-.0268	.2566	.5661	.4800	.4325	.4372	-.4253	
.010		-.0843	.0023		.5740	.5540	.5175	.4539		
.020		-.1000		.0000	.5058	.4647	.4484	.4241	-.1442	
.040			.0244	.2624						
.041	-.1580									
.050					.3319	.2934	.2805	.2783		
.069									-.1747	
.090					.1792					
.081				.1977						
.085			.1056							
.094		-.0676								
.113	-.1490									
.150					.0094	.0005	.0248	.0475		
.157									-.2593	
.153			.0000							
.177				.0633						
.229		.0169								
.246			.0492							
.247	-.0669									
.250					-.1059	-.1149	-.1250	-.1344		
.274				-.0318						
.345									-.2795	
.362		.1100								
.390			-.0276							
.400					-.2117	-.2522		-.3038		
.402				-.1869						
.418										-.4870
.479	.0228									
.497		-.0436								
.503										
.547	.0390								-.2423	
.550					-.2454	-.2860				
.565				-.1593						

AMES 11-073(OA148) -140A/B/C ORB LEFT WING TOP (XEBU71)

ALPHA (1) = -3.946 BETA (3) = 4.272

SECTION (1)LEFT WING TOP SURF DEPENDENT VARIABLE CP

2Y/BW	.2350	.2990	.3640	.4270	.5340	.6730	.7800	.8870	.9720	1.0000
X/CW										
.600								-.3500		
.633	-.0890									
.637			.0211							
.650							-.0855			
.670									-.0716	
.700		-.0405				-.0016				
.723										-.5632
.725					.1113					
.727	-.0954									
.750							.0506	.0285		
.760				.0576						
.775					.4393	.1556				
.793	.2967									
.798			.0630							
.808				.5757						
.834		.0762								
.833			.5379							
.850					.5835	.4419	.1487			
.857				.5432						
.862									.0254	
.865		.4784								
.879			.5015							
.900		.4215			.5087			.0942		
.905				.4788						
.919			.4423							
.950					.4842	.5509	.2248			
.953				.4322						
.955			.4118							
.965		.4246								

ALPHA (2) = .016 BETA (1) = -3.873 MACH = 1.3971 Q = 600.47 P = 439.47 RN/L = 2.5088

SECTION (1)LEFT WING TOP SURF DEPENDENT VARIABLE CP

2Y/BW	.2350	.2990	.3640	.4270	.5340	.6730	.7800	.8870	.9720	1.0000
X/CW										
.000	-.0317	.0175	.0137	.4093	.7601	.7132	.6778	.6896	-.1450	
.010		.0251	.0408		.6101	.6462	.6043	.5124		
.020		.0009		.0000	.5079	.5077	.4656	.4592	.0139	
.040			.0558	.2469						
.041	-.0372									
.050					.2870	.2771	.2604	.2614		
.069									-.0579	
.090					.1129					

AMES 11-073(OA148) -140A/B/C ORB LEFT WING TOP (XEBU71)

ALPHA (2) = .016 BETA (1) = -3.873

SECTION (1)LEFT WING TOP SURF DEPENDENT VARIABLE CP

2Y/BW	.2350	.2990	.3640	.4270	.5340	.6730	.7800	.8870	.9720	1.0000
X/CW										
.081				.1252						
.086			.1149							
.094		-.0542								
.113	-.0327									
.150					-.0841	-.0778	-.0385	-.0103		
.157									-.2163	
.163			.0000							
.177				-.0158						
.229		-.0017								
.246			-.0011							
.247	-.0555									
.250					-.2271	-.2296	-.2138	-.1984		
.274				-.1496						
.345									-.2748	
.362		.0695								
.380			-.1193							
.400					-.3262	-.3718		-.3776		
.402				-.2738						
.418										-.1802
.429	.0106									
.497		-.0798								
.503									-.3269	
.547	.0084									
.550					-.3585	-.4055				
.565				-.2722						
.600								-.3917		
.633	-.1172									
.637			-.2290							
.650							-.4341			
.670									-.2484	
.700		-.1936				-.1303				
.723										-.2941
.725					-.0303					
.727	-.1682									
.750							-.1123	-.2352		
.760				.0693						
.775					-.0198	-.0766				
.793	.0190									
.798			.1090							
.808				.2668						
.834		.0560								
.839			.4277							
.850					.1593	-.0939	-.0200			
.857				.5059						
.862									-.2101	

AMES 11-073(OA148) -140A/B/C ORB LEFT WING TOP (XEBU71)

ALPHA (2) = .016 BETA (1) = -3.873

SECTION (1)LEFT WING TOP SURF DEPENDENT VARIABLE CP

2Y/BW	.2350	.2990	.3640	.4270	.5340	.6730	.7800	.8870	.9720	1.0000
X/CW										
.865		.4310								
.879			.5417							
.900		.4571			.3768			-.0769		
.905				.5470						
.919			.4982							
.950					.5311	.0347	-.0046			
.953				.4898						
.955			.4607							
.965		.4665								

ALPHA (2) = .022 BETA (2) = .180 MACH = 1.3971 Q = 600.47 P = 439.47 RN/L = 2.9088

SECTION (1)LEFT WING TOP SURF DEPENDENT VARIABLE CP

2Y/BW	.2350	.2990	.3640	.4270	.5340	.6730	.7800	.8870	.9720	1.0000
X/CW										
.000	-.0504	-.0253	-.0276	.3550	.6717	.6187	.5883	.5936	-.1976	
.010		-.0438	-.0064		.4993	.5477	.5123	.4233		
.020		-.0638		.0000	.4048	.4162	.4003	.3757	-.0594	
.040			.0183	.1735						
.041	-.0918									
.050					.2180	.2072	.1935	.1953		
.069									-.1228	
.080					.0613					
.081				.0689						
.086			.0747							
.094		-.1122								
.113	-.1014									
.150					-.1160	-.1129	-.0755	-.0457		
.157									-.2624	
.163			.0000							
.177				-.0465						
.229		-.0226								
.246			-.0274							
.247	-.1023									
.250					-.2361	-.2514	-.2404	-.2228		
.274				-.1529						
.345									-.3067	
.362		.0445								
.390			-.1245							
.400					-.3124	-.3736		-.3924		
.402				-.2688						
.418										-.1977
.429	-.0118									

AMES 11-073(OA148) -140A/B/C ORB LEFT WING TOP (XEBU71)

ALPHA (2) = .022 BETA (2) = .180

SECTION (1)LEFT WING TOP SURF DEPENDENT VARIABLE CP

2Y/BW	.2350	.2990	.3640	.4270	.5340	.6730	.7800	.8870	.9720	1.0000
X/CW										
.497		-.1007								
.503									-.3391	
.547	-.0121									
.550					-.3464	-.3983				
.565				-.2684						
.600								-.4111		
.633	-.1509									
.637			-.2240							
.650							-.4303			
.670									-.2367	
.700		-.1922				-.1226				
.723										-.2713
.725					-.0150					
.727	-.1719									
.750							-.0807	-.2248		
.760				.0675						
.775					.0412	-.0902				
.793	.1231									
.798			.0376							
.808				.3331						
.834		.0212								
.839			.4197							
.850					.2881	-.0714	-.0309			
.857				.4605						
.862									-.1962	
.865		.3978								
.879			.4516							
.890		.3659			.4383			-.0443		
.905				.4575						
.919			.4116							
.950					.4723	.2315	-.0303			
.953				.4118						
.955			.3852							
.965		.3785								

AMES 11-073(OA148) -140A/B/C ORB LEFT WING TOP (XEBU71)

ALPHA (2) = .018 BETA (3) = 4.248 MACH = 1.3971 Q = 600.47 P = 439.47 RN/L = 2.9088

SECTION (1)LEFT WING TOP SURF DEPENDENT VARIABLE CP

2Y/BW	.2350	.2990	.3640	.4270	.5340	.6730	.7800	.8870	.9720	1.0000
X/CW										
.000	-.0650	-.1016	-.0886	.2935	.5896	.5370	.4941	.4939	-.2070	
.010		-.1349	-.0534		.3904	.4452	.4060	.3274		
.020		-.1435		.0000	.3173	.3265	.3060	.2838	-.1232	
.040			-.0177	.1178						
.041	-.1347									
.050					.1565	.1373	.1214	.1245		
.069									-.1765	
.080					.0169					
.081				.0347						
.086			.0352							
.094		-.1625								
.113	-.1630									
.150					-.1324	-.1457	-.1163	-.0907		
.157									-.3013	
.163			.0000							
.177				-.0672						
.229		-.0302								
.246			-.0335							
.247	-.1371									
.250					-.2244	-.2687	-.2604	-.2522		
.274				-.1456						
.345									-.3254	
.352		.0416								
.330			-.1236							
.400					-.3056	-.3624		-.4086		
.402				-.2653						
.418										-.1585
.429	-.0159									
.497		-.1088								
.503									-.3495	
.547	-.0200									
.550					-.3412	-.3834				
.565				-.2646						
.600								-.4290		
.633	-.1711									
.637			-.1704							
.650							-.2597			
.670									-.2223	
.700		-.1787				-.1240				
.723										-.2563
.725					-.0165					
.727	-.1712									
.750							-.0996	-.1505		
.760				.0359						
.775					.0956	-.1012				

AMES 11-073(OA148) -140A/B/C ORB LEFT WING TOP (XEBU71)

ALPHA (2) = .018 BETA (3) = 4.248

SECTION (1)LEFT WING TOP SURF DEPENDENT VARIABLE CP

2Y/BW	.2350	.2990	.3640	.4270	.5340	.6730	.7800	.8870	.9720	1.0000
X/CW										
.793	.1628									
.798			-.0053							
.808				.3434						
.834		.0062								
.833			.3781							
.850					.3481	.0204	-.0494			
.857				.4080						
.862									-.1368	
.865		.3503								
.879			.3769							
.900		.2989			.4162			-.0245		
.905				.3876						
.919			.3486							
.950					.4093	.3895	-.0327			
.953				.3572						
.955			.3351							
.965		.3249								

ALPHA (3) = 3.951 BETA (1) = -3.877 MACH = 1.3961 Q = 600.56 P = 440.18 RN/L = 2.9092

SECTION (1)LEFT WING TOP SURF DEPENDENT VARIABLE CP

2Y/BW	.2350	.2990	.3640	.4270	.5340	.6730	.7800	.8870	.9720	1.0000
X/CW										
.000	.0596	.0275	-.0404	.3857	.7570	.7436	.7193	.7070	.0789	
.010		-.0170	-.0585		.3881	.4971	.4652	.3525		
.020		-.0353		.0000	.2884	.3326	.3233	.2886	-.0447	
.040			-.0463	.0429						
.041	-.0231									
.050					.0821	.1094	.0999	.0917		
.069									-.0994	
.080					-.0737					
.081				-.0607						
.086			-.0074							
.094		-.0816								
.113	-.0402									
.150					-.2827	-.2332	-.1830	-.1482		
.157									-.2730	
.163			.0000							
.177				-.1891						
.229		-.0847								
.245			-.1253							
.247	-.0627									
.250					-.3514	-.3667	-.3354	-.3046		

AMES 11-073(OA149) -140A/B/C ORB LEFT WING TOP (XEBU7!)

ALPHA (3) = 3.951 BETA (1) = -3.877

SECTION : 1)LEFT WING TOP SURF DEPENDENT VARIABLE CP

2Y/BW	.2350	.2990	.3640	.4270	.5340	.6710	.7800	.8870	.9720	1.0000
X/CW										
.274				-.2780						
.345									-.3426	
.362		-.0241								
.390			-.2232							
.400					-.4332	-.4773		-.4560		
.402				-.3625						
.418										-.1310
.429	-.0559									
.497		-.1607								
.503									-.4109	
.547	-.0632									
.550					-.4449	-.5089				
.565				-.3556						
.600								-.4449		
.633	-.2134									
.637			-.3073							
.650							-.4129			
.670									-.3976	
.700		-.2743				-.2351				
.723										-.2578
.725					-.1457					
.727	-.2423									
.750							-.2957	-.2787		
.760				-.0622						
.775					-.1500	-.1469				
.793	-.1731									
.798			-.0411							
.806				.0358						
.834		-.0600								
.839			.2089							
.850					-.0775	-.2208	-.2229			
.857				.2171						
.862									-.3935	
.865		.3136								
.879			.3817							
.900		.3884			.0045			-.1891		
.905				.3940						
.919			.4397							
.950					.1927	-.1830	-.1943			
.953				.4415						
.955			.4164							
.985		.4154								

AMES 11-073(OA148) -140A/B/C ORB LEFT WING TOP (XE8U71)

ALPHA (3) = 3.952 BETA (2) = .179 MACH = 1.3961 Q = 600.56 P = 440.16 RN/L = 2.9092

SECTION (1)LEFT WING TOP SURF DEPENDENT VARIABLE CP

2Y/BW	.2350	.2990	.3640	.4270	.5340	.6730	.7800	.8870	.9720	1.0000
X/CW										
.000	.0275	-.0767	-.2013	.2672	.6540	.6454	.6268	.6082	.0249	
.010		-.1302	-.1994		.2758	.3879	.3598	.2495		
.020		-.1338		.0000	.1855	.2396	.2352	.1538	-.1137	
.040			-.1480	-.0220						
.041	-.0713									
.050					.0102	.0348	.0299	.0214		
.069									-.1601	
.080					-.1259					
.081				-.1071						
.086			-.0073							
.094		-.1457								
.113	-.1010									
.150					-.3132	-.2754	-.2271	-.1920		
.157									-.3164	
.163			.0000							
.177				-.2079						
.229		-.1233								
.246			-.1429							
.247	-.1115									
.250					-.3602	-.3906	-.3657	-.3370		
.274				-.2777						
.345									-.3745	
.362		-.0348								
.390			-.2196							
.400					-.4278	-.4878		-.4758		
.402				-.3530						
.418										-.2489
.429	-.0674									
.497		-.1743								
.503									-.4110	
.547	-.0774									
.550					-.4170	-.5040				
.565				-.3426						
.600								-.4577		
.633	-.2323									
.637			-.3009							
.650							-.3993			
.670									-.4069	
.700		-.2759				-.2309				
.723										-.3696
.725					-.1228					
.727	-.2443									
.750							-.3026	-.2551		
.760				-.0560						
.775					-.1071	-.1485				

AMES 11-073(OA148) -140A/B/C ORB LEFT WING TOP (XE8U71)

ALPHA (3) = 3.952 BETA (2) = .179

SECTION (1)LEFT WING TOP SURF DEPENDENT VARIABLE CP

2Y/BW	.2350	.2990	.3640	.4270	.5340	.6730	.7800	.8870	.9720	1.0000
X/CW										
.793	-.0100									
.798			-.0765							
.808				.0880						
.834		-.0212								
.839			.2545							
.850					-.0108	-.2066	-.2078			
.857				.2291						
.862									-.3574	
.865		.3356								
.879			.3268							
.900		.3066			.1150			-.1684		
.905				.3256						
.918			.3347							
.950					.2638	-.	-.1779			
.953				.3515						
.955			.3406							
.965		.3323								

ALPHA (3) = 3.956 BETA (3) = 4.242 MACH = 1.3961 Q = 600.56 P = 440.18 RN/L = 2.9092

SECTION (1)LEFT WING TOP SURF DEPENDENT VARIABLE CP

2Y/BW	.2350	.2990	.3640	4270	.5340	.6730	.7800	.8870	.9720	1.0000
X/CW										
.000	-.0031	-.2243	-.4199	.1287	.5369	.5469	.5293	.5102	-.0583	
.010		-.2731	-.3685		.1463	.2670	.2403	.1380		
.020		-.2584		.0000	.0655	.1305	.1271	.0914	-.1984	
.040			-.2318	-.0919						
.041	-.1131									
.050					-.0704	-.0457	-.0536	-.0649		
.069									-.2304	
.080					-.1820					
.081				-.1485						
.096			-.1225							
.094		-.2088								
.113	-.1598									
.130					-.3258	-.3112	-.2752	-.2462		
.157									-.3595	
.153			.0000							
.177				-.2034						
.229		-.1281								
.246			-.1389							
.247	-.1591									
.250					-.3552	-.4101	-.3986	-.3730		

AMES 11-073(OA148) -140A/B/C ORB LEFT WING TOP (XE8U71)

ALPHA (3) = 3.955 BETA (3) = 4.242

SECTION (1)LEFT WING TOP SURF DEPENDENT VARIABLE CP

2Y/BW	.2350	.2990	.3640	.4270	.5340	.6730	.7800	.8070	.9720	1.0000
X/CW										
.274				-.2604						
.345									-.4150	
.392		-.0313								
.390			-.2081							
.400					-.3949	-.4844		-.4949		
.402				-.3344						
.418										-.4172
.425	-.0714									
.497		-.1786								
.503									-.4046	
.547	-.0783									
.550					-.4051	-.4853				
.565				-.3341						
.600								-.3901		
.633	-.2445									
.637			-.3047							
.650							-.3357			
.670									-.3638	
.700		-.2762				-.2136				
.723										-.4648
.725					-.1089					
.727	-.2436									
.750							-.2580	-.2557		
.760				-.0978						
775					-.0606	-.1324				
.733	.0997									
.798			-.0910							
.808				.1513						
.834		-.0249								
.839			.2976							
.850					.0696	-.1576	-.1999			
.857				.2496						
.862									-.2923	
.865		.2914								
.879			.3053							
.900		.2214			.1673			-.1919		
.905				.2816						
.919			.2658							
.950					.2600	-.0100	-.1725			
.953				.2820						
.955			.2596							
.965		.2420								

AMES 11-073(OA148) -140A/B/C ORB LEFT WING TOP (XE8U71)

ALPHA (4) = 7.987 BETA (1) = -3.073 MACH = 1.3969 Q = 600.27 P = 439.47 RN/L = 2.9090

SECTION (1)LEFT WING TOP SURF DEPENDENT VARIABLE CP

2Y/BW	.2350	.2990	.3640	.4270	.5340	.6730	.7800	.8870	.9720	1.0000
X/CW										
.000	.0968	-.0626	-.2142	.2711	.6980	.7188	.7084	.6790	.0212	
.010		-.1496	-.2430		.1595	.3068	.2718	.1376		
.020		-.1353		.0000	.0486	.1395	.1378	.0743	-.2304	
.040			-.1789	-.1528						
.041	-.0193									
.050					-.1211	-.0743	-.0759	-.1013		
.069									-.2558	
.080					-.2500					
.081				-.2574						
.086			-.1222							
.094		-.1148								
.113	-.0345									
.150					-.4244	-.3676	-.3297	-.2967		
.157									-.3980	
.163			.0000							
.177				-.3862						
.229		-.1229								
.246			-.2715							
.247	-.0590									
.250					-.5138	-.4808	-.4496	-.4166		
.274				-.4283						
.345									-.4514	
.362		-.1177								
.390			-.3340							
.400					-.5719	-.5619		-.3958		
.402				-.4511						
.418										-.3909
.479	-.1108									
.497		-.2604								
.503									-.4798	
.547	-.1651									
.550					-.4682	-.4618				
.565				-.4221						
.600								-.3771		
.633	-.3059									
.637			-.3947							
.650							-.4117			
.670									-.5079	
.700		-.3638				-.4272				
.723										-.5075
.725					-.3346					
.727	-.3151									
.750							-.3824	-.3396		
.760				-.1815						
.775					-.2791	-.3781				

AMES 11-073(OA148) -140A/B/C ORB LEFT WING TOP (XEBU71)

ALPHA (4) = 7.987 BETA (1) = -3.873

SECTION (1)LEFT WING TOP SURF DEPENDENT VARIABLE CP

2Y/BW	.2350	.2990	.3640	.4270	.5340	.6730	.7800	.8870	.9720	1.0000
X/CW										
.793	-.2840									
.798			-.1636							
.808				-.0959						
.834		-.1367								
.839			.1413							
.850					-.2767	-.3917	-.3419			
.857				.0406						
.862									-.4898	
.865		.2896								
.879			.2587							
.900		.3839			-.2313			-.2822		
.905				.1525						
.919			.3544							
.950					-.1615	-.3145	-.2970			
.953				.2421						
.955			.3559							
.965		.3710								

ALPHA (4) = 7.995 BETA (2) = .177 MACH = 1.3969 Q = 600.27 P = 439.47 RN/L = 2.9090

SECTION (1)LEFT WING TOP SURF DEPENDENT VARIABLE CP

2Y/BW	.2350	.2990	.3640	.4270	.5340	.6730	.7800	.8870	.9720	1.0000
X/CW										
.000	.0376	-.2245	-.4427	.0568	.5465	.5858	.5846	.5489	-.1406	
.010		-.2998	-.4013		-.0007	.1520	.1239	.0071		
.020		-.2758		.0000	-.1036	.0031	.0106	-.0463	-.3514	
.040			-.3232	-.2940						
.041	-.0650									
.050					-.2496	-.1848	-.1733	-.1993		
.069									-.3553	
.080					-.3503					
.081				-.3478						
.086			-.2292							
.094		-.1853								
.113	-.0982									
.150					-.4825	-.4254	-.3866	-.3575		
.157									-.4265	
.163			.0000							
.177				-.4445						
.229		-.1820								
.245			-.2786							
.247	-.1167									
.250					-.5363	-.5128	-.4866	-.4508		

AMES 11-073(OA148) -140A/B/C ORB LEFT WING TOP (XEBU71)

ALPHA (4) = 7.995 BETA (2) = .177

SECTION (1)LEFT WING TOP SURF DEPENDENT VARIABLE CP

2Y/BW	.2350	.2990	.3640	.4270	.5340	.6730	.7800	.8870	.9720	1.0000
X/CW										
.274				-.3706						
.345									-.4581	
.362		-.1618								
.390			-.3077							
.400					-.5499	-.5691		-.4145		
.402				-.4118						
.418										-.4637
.429	-.1699									
.497		-.2708								
.503									-.4467	
.547	-.1597									
.550					-.4706	-.4810				
.565				-.4038						
.600								-.4000		
.633	-.3105									
.637			-.3957							
.650							-.4256			
.670									-.4127	
.700		-.3564				-.4558				
.723										-.3922
.725					-.2196					
.727	-.3024									
.750							-.4004	-.3713		
.760				-.1669						
.775					-.1893	-.3725				
.793	-.1376									
.798			-.1805							
.808				.0265						
.834		-.0495								
.839			.2103							
.850					-.0998	-.3962	-.3550			
.857				.1217						
.862									-.3884	
.865		.2470								
.879			.2580							
.900		.3057			-.0464			-.3143		
.905				.1541						
.919			.2917							
.950					.0357	-.2922	-.2975			
.953				.1767						
.955			.2936							
.965		.2839								

AMES 11-073(OA148) -140A/B/C ORB LEFT WING TOP (XE8U71)

ALPHA (4) = 7.892 BETA (3) = 4.237 MACH = 1.3969 Q = 600.27 P = 439.47 RN/L = 2.9090

SECTION (1)LEFT WING TOP SURF DEPENDENT VARIABLE CP

2Y/BW	.2350	.2990	.3640	.4270	.5340	.6730	.7800	.8870	.9720	1.0000
X/CW										
.000	-.0146	-.4029	-.4160	-.1466	.3731	.4442	.4558	.4129	-.3106	
.010		-.3843	-.4082		-.1707	.0130	-.0141	-.1147		
.020		-.3947		.0000	-.2632	-.1126	-.1114	-.1609	-.4525	
.040			-.3986	-.3296						
.041	-.1104									
.050					-.3788	-.2719	-.2638	-.2330		
.069									-.4506	
.080					-.4562					
.081				-.3113						
.086			-.3748							
.094		-.3733								
.113	-.1567									
.150					-.5064	-.4715	-.4388	-.4167		
.157									-.4535	
.153			.0000							
.177				-.3168						
.229		-.2069								
.246			-.4343							
.247	-.1746									
.250					-.4746	-.5447	-.5223	-.4868		
.274				-.3387						
.345									-.5000	
.362		-.1142								
.390			-.2850							
.400					-.4498	-.5814		-.4587		
.402				-.3862						
.418										-.4767
.429	-.1562									
.497		-.2410								
.503									-.4780	
.547	-.1410									
.550					-.4445	-.5173				
.565				-.4084						
.600								-.4368		
.633	-.3005									
.637			-.3762							
.650							-.4593			
.670									-.4473	
.700		-.3273				-.4412				
.723										-.4074
.725					-.1745					
.727	-.2939									
.750							-.4322	-.3800		
.760				-.1875						
.775					-.0727	-.2753				

ORIGINAL PAGE IS OF POOR QUALITY

AMES 11-073(OA148) -140A/B/C ORB LEFT WING TOP (XEBU71)

ALPHA (4) = 7.892 BETA (3) = 4.237

SECTION (1)LEFT WING TOP SURF DEPENDENT VARIABLE CP

2Y/BW	.2350	.2990	.3640	.4270	.5340	.6730	.7800	.8870	.9720	1.0000
X/CW										
.793	.0103									
.798			-.1500							
.808				.0785						
.834		-.1051								
.839			.1681							
.850					.0209	-.2233	-.3957			
.857				[illegible]						
.862									-.4284	
.865		.1497								
.879			.2438							
.900		.1216			.0957			-.3128		
.905				.1602						
.919			.2176							
.950					.1699	-.0850	-.3461			
.953				.1789						
.955			.2107							
.965		.2018								

ALPHA (5) = 11.960 BETA (1) = -3.861 MACH = 1.3964 Q = 600.16 P = 439.71 RN/L = 2.9137

SECTION (1)LEFT WING TOP SURF DEPENDENT VARIABLE CP

2Y/BW	.2350	.2990	.3640	.4270	.5340	.6730	.7800	.8870	.9720	1.0000
X/CW										
.000	.0256	-.2410	-.3750	.1116	.6084	.6489	.6444	.5814	-.1792	
.010		-.2846	-.3387		-.0254	.1239	.0601	-.0771		
.020		-.2779		.0000	-.1364	-.0303	-.0573	-.1303	-.4768	
.040			-.2744	-.3261						
.041	-.0138									
.050					-.2882	-.2210	-.2314	-.2787		
.062									-.4431	
.080					-.3882					
.081				-.3859						
.086			-.2045							
.094		-.1985								
.113	-.0371									
.150					-.5173	-.4676	-.4330	-.4230		
.157									-.4470	
.163			.0000							
.177				-.4783						
.229		-.1752								
.245			-.2927							
.247	-.0548									
.250					-.5446	-.5424	-.4559	-.4147		

AMES 11-073(OA148) -140A/B/C ORB LEFT WING TOP (XEBU71)

ALPHA (5) = 11.960 BETA (1) = -3.861

SECTION (1)LEFT WING TOP SURF DEPENDENT VARIABLE CP

2Y/BW	.2350	.2990	.3640	.4270	.5340	.6730	.7800	.8870	.9720	1.0000
X/CW										
.274				-.4747						
.345									-.4622	
.362		-.1535								
.390			-.3791							
.400					-.5240	-.5104		-.4275		
.402				-.4818						
.418										-.4519
.429	-.1337									
.497		-.3625								
.503									-.4455	
.547	-.2000									
.550					-.4951	-.4698				
.565				-.4771						
.600								-.4071		
.633	-.4004									
.637			-.4563							
.650							-.4402			
.670									-.4197	
.700		-.4691				-.4526				
.723										-.4118
.725					-.4659					
.727	-.4092									
.750							-.4025	-.3918		
.760				-.3151						
.775					-.4434	-.4383				
.793	-.3747									
.798			-.2296							
.808				-.3354						
.834		-.1578								
.839			-.0766							
.850					-.3812	-.4256	-.3977			
.857				-.2975						
.862									-.4140	
.865		.1703								
.879			-.0220							
.900		.2270			-.3444			-.3519		
.905				-.1145						
.919			-.0568							
.950					-.2928	-.3418	-.3459			
.953				-.0727						
.955			-.0106							
.965		.2493								

AMES 11-073(OA148) -140A/B/C ORB LEFT WING TOP (XEBU71)

ALPHA (5) = 11.969 BETA (2) = .177 MACH = 1.3964 Q = 600.16 P = 439.71 RN/L = 2.9137

SECTION (1)LEFT WING TOP SURF DEPENDENT VARIABLE CP

2Y/BW	.2350	.2990	.3640	.4270	.5340	.6730	.7800	.8870	.9720	1.0000
X/CW										
.000	-.0623	-.3882	-.3656	-.0895	.4335	.4854	.4827	.4215	-.3472	
.010		-.3166	-.3633		-.1777	-.0321	-.0885	-.2038		
.020		-.3120		.0000	-.2777	-.1720	-.1971	-.2587	-.4616	
.040			-.3466	-.3773						
.041	-.0804									
.050					-.4007	-.3320	-.3388	-.3779		
.069									-.4616	
.080					-.4821					
.081				-.4148						
.086			-.3197							
.094		-.3570								
.113	-.1249									
.150					-.5794	-.5285	-.4981	-.4843		
.157									-.4676	
.163			.0000							
.177				-.4338						
.229		-.4218								
.246			-.3908							
.247	-.1063									
.250					-.5784	-.5418	-.4848	-.4614		
.274				-.4659						
.345									-.4640	
.362		-.2997								
.390			-.4148							
.400					-.5431	-.5257		-.4838		
.402				-.4992						
.418										-.4570
.429	-.1948									
.497		-.4201								
.503									-.4578	
.547	-.2726									
.550					-.5241	-.5047				
.565				-.4742						
.600								-.4504		
.633	-.4178									
.637			-.4735							
.650							-.4741			
.679									-.4469	
.700		-.4358				-.4843				
.723										-.4332
.725					-.4499					
.727	-.4029									
.750							-.4326	-.4455		
.760				-.2423						
.775					-.4339	-.4614				

AMES 11-073(OA148) -140A/B/C ORB LEFT WING TOP (XE8U71)

ALPHA (5) = 11.969 BETA (2) = .177

SECTION (1)LEFT WING TOP SURF DEPENDENT VARIABLE CP

2Y/BW	.2350	.2990	.3640	.4270	.5340	.6730	.7800	.8870	.9720	1.0000
X/CW										
.793	-.1975									
.798			-.2286							
.808				-.2256						
.834		-.1304								
.839			.0215							
.850					-.3848	-.4248	-.4126			
.857				-.1739						
.862									-.4405	
.865		.1097								
.879			.1083							
.900		.1316			-.3294			-.4052		
.905				-.2426						
.919			.0494							
.940					-.2135	-.3624	-.3635			
.953				-.1685						
.955			.0291							
.965		.2071								

ALPHA (5) = 11.967 BETA (3) = 4.251 MACH = 1.3964 Q = 600.16 P = 439.71 RN/L = 2.9137

SECTION (1)LEFT WING TOP SURF DEPENDENT VARIABLE CP

2Y/BW	.2350	.2990	.3640	.4270	.5340	.6730	.7800	.8870	.9720	1.0000
X/CW										
.000	-.1469	-.3913	-.4111	-.3059	.2491	.3108	.3052	.2394	-.4692	
.010		-.3835	-.4106		-.3215	-.1755	-.2273	-.3427		
.020		-.3842		.0000	-.4003	-.3052	-.3257	-.3827	-.4931	
.040			-.4164	-.3939						
.041	-.1781									
.050					-.4942	-.4294	-.4387	-.4759		
.069									-.4883	
.080					-.5553					
.081				-.4225						
.086			-.3871							
.094		-.4419								
.113	-.1626									
.150					-.5926	-.5840	-.5562	-.5549		
.157									-.4895	
.163			.0000							
.177				-.4313						
.229		-.5405								
.246			-.4333							
.247	-.1955									
.250					-.5924	-.6050	-.5638	-.5704		

AMES 11-073(OA148) -140A/B/C ORB LEFT WING TOP (XEBU71)

ALPHA (5) = 11.967 BETA (3) = 4.251

SECTION (1)LEFT WING TOP SURF DEPENDENT VARIABLE CP

2Y/BW	.2350	.2990	.3640	.4270	.5340	.6730	.7800	.8870	.9720	1.0000
X/CW										
.274				-.4199						
.345									-.4888	
.362		-.3990								
.390			-.4159							
.400					-.6081	-.5914		-.5208		
.402				-.4677						
.418										-.4851
.429	-.2775									
.487		-.3796								
.533									-.4893	
.547	-.2460									
.550					-.5501	-.5793				
.555				-.4919						
.600								-.4951		
.633	-.3895									
.637			-.4749							
.650							-.5047			
.670									-.4812	
.700		-.3787				-.5469				
.723										-.4495
.725					-.2388					
.727	-.3746									
.750							-.4608	-.4814		
.760				-.2132						
.775					-.1894	-.4451				
.793	-.0690									
.798			-.2392							
.808				-.1656						
.834		-.1849								
.839			.0165							
.850					-.1705	-.4439	-.4046			
.857				-.0692						
.862									-.4750	
.865		-.0240								
.879			.0965							
.900		.0397			-.1705			-.4478		
.905				.0684						
.919			.0922							
.950					-.1672	-.3076	-.3597			
.953				-.0242						
.955			.1941							
.965		.1285								

AMES 11-073(OA148) -140A/B/C ORB LEFT WING TOP (XEBU71)

ALPHA (6) = 15.903 BETA (1) = -3.840 MACH = 1.3960 Q = 600.45 P = 440.18 RN/L = 2.9185

SECTION (1)LEFT WING TOP SURF DEPENDENT VARIABLE CP

2Y/BW	.2350	.2990	.3640	.4270	.5340	.6730	.7800	.8870	.9720	1.0000
X/CW										
.000	-.0301	-.3252	-.3056	-.0103	.4944	.5329	.5213	.4229	-.3418	
.010		-.2863	-.2882		-.1820	-.0489	-.1304	-.2786		
.020		-.2752		.0000	-.2813	-.1982	-.2433	-.3264	-.5162	
.040			-.2789	-.3410						
.041	-.1577									
.050					-.4089	-.3530	-.3800	-.4331		
.060									-.5124	
.080					-.4886					
.081				-.3712						
.086			-.2490							
.094		-.2906								
.113	-.0424									
.150					-.5824	-.5447	-.5232	-.5283		
.157									-.5146	
.163			.0000							
.177				-.3904						
.229		-.3609								
.246			-.3635							
.247	-.0812									
.250					-.5521	-.5442	-.5158	-.4993		
.274				-.4363						
.345									-.5155	
.362		-.3785								
.390			-.4042							
.400					-.5432	-.5330		-.5133		
.402				-.4978						
.418										-.5161
.429	-.1622									
.497		-.4837								
.503									-.5138	
.547	-.2548									
.550					-.5432	-.5354				
.585				-.5299						
.600								-.5116		
.633	-.4800									
.637			-.5095							
.650							-.5242			
.670									-.5084	
.700		-.5199				-.5280				
.723										-.5013
.775					-.5136					
.787	-.5314									
.750							-.4698	-.5250		
.760				-.3348						
.775					-.5110	-.4940				

AMES 11-073(OA148) -140A/B/C ORB LEFT WING TOP (XEBU7;)

ALPHA (6) = 15.903 BETA (1) = -3.840

SECTION (1)LEFT WING TOP SURF DEPENDENT VARIABLE CP

2Y/BW	.2350	.2990	.3640	.4270	.5340	.6730	.7800	.8870	.9720	1.0000
X/CW										
.793	-.3633									
.798			-.2633							
.808				-.3146						
.834		-.2211								
.839			-.2372							
.852					-.4595	-.4792	-.4708			
.857				-.3552						
.862									-.5077	
.865		-.0811								
.879			-.0819							
.900		.0110			-.4433			-.5014		
.905				-.3590						
.919			-.1168							
.950					-.3896	-.3939	-.4294			
.953				-.3200						
.955			-.167[illegible]							
.965		.0739								

ALPHA (6) = 15.917 BETA (2) = .180 MACH = 1.3960 Q = 600.45 P = 440.18 RN/L = 2.9185

SECTION (1)LEFT WING TOP SURF DEPENDENT VARIABLE CP

2Y/BW	.2350	.2990	.3640	.4270	.5340	.6730	.7800	.8870	.9720	1.0000
X/CW										
.000	-.1398	-.3789	-.3656	-.2370	.3155	.3551	.3388	.2421	-.4558	
.010		-.3713	-.3675		-.3188	-.1915	-.2571	-.3802		
.020		-.3736		.0000	-.3992	-.3234	-.3564	-.4254	-.5377	
.040			-.3632	-.3668						
.041	-.3203									
.050					-.4965	-.4466	-.4678	-.5112		
.069									-.5358	
.080					-.5574					
.081				-.4077						
.086			-.3299							
.09[illegible]		-.3958								
.113	-.1279									
.150					-.5862	-.5938	-.5755	-.5769		
.157									-.5363	
.163			.0000							
.177				-.4598						
.229		-.4377								
.245			-.4409							
.247	-.1900									
.250					-.5798	-.5690	-.5478	-.5533		

AMES 11-073(OA148) -140A/B/C ORB LEFT WING TOP (XEBU71)

ALPHA (6) = 15.917 BETA (2) = .180

SECTION (1)LEFT WING TOP SURF DEPENDENT VARIABLE CP

2Y/BW	.2350	.2090	.3640	.4270	.5340	.6730	.7800	.9870	.9720	1.0000
X/CW										
.274				-.4997						
.345									-.5346	
.362		-.4770								
.390			-.4678							
.400					-.5631	-.5659		-.5528		
.402				-.5442						
.418										-.5299
.429	-.2600									
.497		-.5339								
.503									-.5325	
.547	-.3522									
.550					-.5633	-.5666				
.565				-.5128						
.600								-.5406		
.633	-.5086									
.637			-.5134							
.650							-.5431			
.670									-.5251	
.700		-.5087				-.5604				
.723										-.5149
.725					-.5118					
.727	-.5238									
.750							-.5021	-.5407		
.760				-.3077						
.775					-.4887	-.5218				
.793	-.3181									
.798			-.2676							
.808				-.3566						
.834		-.1852								
.839			-.0197							
.850					-.4794	-.4785	-.4821			
.857				-.2983						
.862									-.5263	
.865		-.0671								
.879			-.0573							
.900		.0253			-.4937			-.5312		
.905				-.2959						
.919			-.1082							
.950					-.4648	-.3853	-.4320			
.953				-.3244						
.955			-.0965							
.965		.0527								

AMES 11-073(OA148) -140A/B/C ORB LEFT WING TOP (XEBU71)

ALPHA (6) = 15.910 BETA (3) = 4.280 MACH = 1.3960 Q = 600.45 P = 440.18 PN/L = 2.9185

SECTION (1)LEFT WING TOP SURF DEPENDENT VARIABLE CP

Z/BW	.2350	.2990	.3640	.4270	.5340	.6730	.7800	.8870	.9720	1.0000
X/CW										
.000	-.2331	-.4171	-.4412	-.4154	.1306	.1757	.1580	.0700	-.5349	
.010		-.4209	-.4426		-.4335	-.3205	-.3772	-.4923		
.020		-.4248		.0000	-.5028	-.4350	-.4616	-.5255	-.5314	
.040			-.4424	-.4180						
.041	-.4367									
.050					-.5713	-.5301	-.5457	-.5844		
.069									-.5268	
.080					-.6133					
.081				-.4342						
.088			-.4019							
.094		-.4541								
.113	-.2219									
.150					-.5983	-.6171	-.5855	-.5512		
.157									-.5240	
.153			.0000							
.177				-.5032						
.229		-.4905								
.245			-.5112							
.247	- 2593									
.250					-.5971	-.6011	-.5731	-.5565		
.274				-.5096						
.345									-.5195	
.362		-.5311								
.390			-.4765							
.400					-.5818	-.5925		-.5388		
.402				-.5096						
.418										-.5160
.429	-.3459									
.497		-.5189								
.503									-.5216	
.547	-.3847									
.550					-.5919	-.5889				
.565				-.5175						
.600								-.5227		
.633	-.4674									
.637			-.4632							
.650							-.5577			
.670									-.5142	
.700		-.4362				-.5808				
.723										-.4993
.725					-.4054					
.727	-.4397									
.750							-.5352	-.5143		
.760				-.2890						
.775					-.3932	-.5124				

AMES 11-073(OA14B) -140A/B/C ORB LEFT WING TOP (XEBU71)

ALPHA (6) = 15.910 BETA (3) = 4.260

SECTION (1)LEFT WING TOP SURF DEPENDENT VARIABLE CP

2Y/BW	.2350	.2990	.3640	.4270	.5340	.6730	.7800	.8870	.9720	1.0000
X/CW										
.793	-.2267									
.798			-.2626							
.808				-.2195						
.834		-.2126								
.839			-.0597							
.850					-.3627	-.4636	-.5145			
.857				-.1977						
.862									-.5059	
.865		-.1[illegible]								
.879			-.0378							
.900		-.0243			-.3968			-.5002		
.905				-.2254						
.919			-.0585							
.950					-.4101	-.4657	-.4769			
.953				-.2427						
.955			-.0499							
.965		.0177								

AMES 11-073(OA148) -140A/B/C ORB LEFT WING TOP (XEBU72) (05 AUG 75)

REFERENCE DATA

SREF = 2690.0000 SQ.FT. XMRP = 1076.6800 IN. XO
LREF = 474.8000 IN. YMRP = .0000 IN. YO
BREF = 936.0680 IN. ZMRP = 375.0000 IN. ZO
SCALE = .0300

PARAMETRIC DATA

RUDDER = -5.000 SPDBRK = 55.000
BDFLAP = 16.300 L-ELVN = -10.000
R-ELVN = -10.000 MACH = 1.250

ALPHA (1) = -3.944 BETA (1) = -3.854 MACH = 1.2471 Q = 599.40 P = 550.63 RN/L = 3.0068

SECTION (1)LEFT WING TOP SURF DEPENDENT VARIABLE CP

2Y/BW	.2350	.2990	.3640	.4270	.5340	.6730	.7800	.8870	.9720	1.0000
X/CW										
.000	-.2004	-.0822	-.1135	.2716	.6682	.6045	.5611	.5838	-.4374	
.010		-.0307	-.0074		.7289	.7075	.6690	.5945		
.020		-.0355		.0000	.6497	.6062	.5768	.5513	-.0505	
.040			.0465	.4144						
.041	-.1001									
.050					.4408	.3941	.3774	.3642		
.069									-.1105	
.080					.2527					
.081				.3011						
.086			.1654							
.094		-.0045								
.113	-.0568									
.150					.0133	.0104	.0335	.0475		
.157									-.2519	
.163			.0000							
.177				.1000						
.229		.0541								
.246			.0993							
.247	-.0025									
.250					-.1285	-.1433	-.1330	-.1632		
.274				-.0436						
.345									-.2748	
.362		.1547								
390			-.0197							
.400					-.2675	-.3197		-.3838		
.402				-.2023						
.418										-.5072
.429	.0494									
.497		.0129								
.503									-.1959	
.547	.0742									
.550					-.0443	-.2735				
.565				.0557						
.600								-.0571		
.633	-.0492									
.637			.1654							
.650							.0466			
.670									.0137	

AMES 11-073(OA148) -140A/B/C ORB LEFT WING TOP (XEBU72)

ALPHA (1) = -3.944 BETA (1) = -3.854

SECTION (1)LEFT WING TOP SURF DEPENDENT VARIABLE CP

2Y/BW	.2350	.2990	.3640	.4270	.5340	.6730	.7800	.8870	.9720	1.0000
X/CW										
.700		.1507				.0240				
.723										-.5946
.725					.3169					
.727	-.0369									
.750							.0974	.0351		
.760				.4001						
.775					.6065	.3066				
.793	.3732									
.798			.3882							
.808				.7350						
.834		.3449								
.839			.7009							
.850					.6657	.6651	.1932			
.857				.6204						
.862									.0006	
.865		.6595								
.879			.5968							
.900		.5289			.5535			.0974		
.905				.5293						
.919			.5042							
.950					.4828	.5476	.3280			
.953				.4622						
.955			.4513							
.965		.4657								

ALPHA (1) = -3.937 BETA (2) = .190 MACH = 1.2471 Q = 599.40 P = 550.83 RN/L = 3.0068

SECTION (1)LEFT WING TOP SURF DEPENDENT VARIABLE CP

2Y/BW	.2350	.2990	.3640	.4270	.5340	.6730	.7800	.8870	.9720	1.0000
X/CW										
.000	-.2193	-.0784	-.0696	.2411	.5995	.5150	.4712	.4873	-.5126	
.010		-.0662	-.0138		.6550	.6279	.5897	.5217		
.020		-.0827		.0000	.5802	.5346	.5085	.4808	-.1338	
.040			.0318	.3531						
.041	-.1714									
.050					.3921	.3393	.3200	.3138		
.069									-.1739	
.080					.2224					
.081				.2408						
.085			.1290							
.094		-.0273								
.113	-.1191									
.150					.0098	-.0086	.0093	.0257		

AMES 11-073(OA148) -140A/B/C ORB LEFT WING TOP (XE8U72)

ALPHA (1) = -3.937 BETA (2) = .190

SECTION (1)LEFT WING TOP SURF DEPENDENT VARIABLE CP

2Y/BW	.2350	.2990	.3640	.4270	.5340	.6730	.7800	.8870	.9720	1.0000
X/CW										
.157									-.3082	
.163			.0000							
.177				.0881						
.229		.0276								
.246			.0706							
.247	-.0232									
.250					-.1252	-.1545	-.1529	-.1764		
.274				-.0428						
.345									-.2631	
.362		.1388								
.390			-.0329							
.400					-.2538	-.3068		-.3948		
.402				-.1941						
.418										-.5827
.429	.0326									
.497		-.0099								
.503									-.1115	
.547	.0543									
.550					.0223	-.2440				
.565				.1233						
.600								-.0285		
.633	-.0540									
.637			.2013							
.650							.0327			
.670									.0135	
.700		.1927				.1218				
.723										-.6945
.725					.3170					
.727	.1002									
.750							.1053	.0453		
.760				.3390						
.775					.6443	.4670				
.793	.3524									
.798			.3194							
.808				.6886						
.834		.2679								
.839			.5406							
.850					.6053	.5702	.4449			
.857				.5644						
.862									-.0123	
.865		.6093								
.879			.5347							
.900		.4684			.5092			.1853		
.905				.4832						
.919			.4510							

AMES 11-073(OA148) -140A/B/C ORB LEFT WING JP (XEBU72)

ALPHA (1) = -3.937 BETA (2) = .190

SECTION (1)LEFT WING TOP SURF DEPENDENT VARIABLE CP

2Y/BW	.2350	.2990	.3640	.4270	.5340	.6730	.7800	.8870	.9720	1.0000
X/CW										
.950					.4557	.5188	.5886			
.953				.4218						
.955			.4038							
.965		.4101								

ALPHA (1) = -3.943 BETA (3) = 4.266 MACH = 1.2471 Q = 599.40 P = 550.63 RN/L = 3.0068

SECTION (1)LEFT WING TOP SURF DEPENDENT VARIABLE CP

2Y/BW	.2350	.2990	.3640	.4270	.5340	.6730	.7800	.8870	.9720	1.0000
X/CW										
.000	-.2051	-.1013	-.0396	.2630	.5377	.4371	.3843	.3922	-.5659	
.010		-.1137	-.0069		.5718	.5373	.4979	.4354		
.020		-.1295		.0000	.5041	.4500	.4261	.4010	-.2153	
.040			.0244	.3049						
.041	-.2175									
.050					.3361	.2759	.2514	.2487		
.069									-.2437	
.080					.1809					
.081				.2120						
.086			.1099							
.094		-.0416								
.113	-.1729									
.150					-.0088	-.0372	-.0141	-.0078		
.157									-.3614	
.163			.0000							
.177				.0709						
.229		.0115								
.246			.0707							
.247	-.0270									
.250					-.1338	-.1738	-.1881	-.2069		
.274				-.0524						
.345									-.2774	
.362		.1385								
.390			-.0439							
.400					-.2513	-.3019		-.4029		
.402				-.1997						
.418										-.6228
.429	.0320									
.497		-.0351								
.503									-.0718	
.547	.0423									
.550					.0693	-.0637				
.565				.1553						

AMES 11-073(OA148) -140A/B/C ORB LEFT WING TOP (XEBU72)

ALPHA (1) = -3.943 BETA (3) = 4.266

SECTION (1)LEFT WING TOP SURF DEPENDENT VARIABLE CP

2Y/BW	.2350	.2990	.3640	.4270	.5340	.6730	.7800	.8870	.9720	1.0000
X/CW										
.600								-.0191		
.633	-.0771									
.637			.2113							
.650							.0272			
.670									.0091	
.700		.2025				.1903				
.723										-.6204
.725					.2490					
.727	.1203									
.750							.3039	.0606		
.760				.2499						
.775					.6559	.4929				
.793	.3396									
.798			.2335							
.808				.6494						
.834		.1648								
.839			.5997							
.850					.5590	.4967	.6292			
.857				.5294						
.862									.0313	
.865		.5723								
.879			.4985							
.900		.4333			.4649			.4963		
.905				.4455						
.919			.4179							
.950					.4267	.4865	.5110			
.953				.3927						
.955			.3759							
.965		.3911								

ALPHA (2) = .045 BETA (1) = -3.865 MACH = 1.2470 Q = 599.89 P = 551.11 RN/L = 3.0108

SECTION (1)LEFT WING TOP SURF DEPENDENT VARIABLE CP

2Y/BW	.2350	.2990	.3640	.4270	.5340	.6730	.7800	.8870	.9720	1.0000
X/CW										
.000	-.0849	.0111	.0023	.4183	.7222	.6734	.6375	.6502	-.2406	
.010		-.0011	.0285		.5776	.6050	.5686	.4714		
.020		-.0273		.0000	.4699	.4585	.4469	.4137	-.0529	
.040			.0532	.2458						
.041	-.0882									
.050					.2367	.2085	.2045	.2014		
.069									-.1328	
.080					.0466					

AMES 11-073(OA148) -140A/B/C ORB LEFT WING TOP (XEBU72)

ALPHA (2) = .045 BETA (1) = -3.865

SECTION (1)LEFT WING TOP SURF DEPENDENT VARIABLE CP

2Y/BW	.2350	.2990	.3640	.4270	.5340	.6730	.7800	.8870	.9720	1.0000
X/CW										
.081				.1243						
.086			.1140							
.094		-.0876								
.113	-.0565									
.150					-.1599	-.1490	-.1283	-.1066		
.157									-.3153	
.163			.0000							
.177				-.0719						
.229		-.0090								
.246			-.0264							
.247	-.0744									
.250					-.2729	-.3222	-.3140	-.3011		
.274				-.1918						
.345									-.3768	
.362		.0832								
.390			-.1559							
.400					-.3797	-.4484		-.4960		
.402				-.3257						
.418										-.2522
.429	.0061									
.497		-.0952								
.503									-.3651	
.547	-.0015									
.550					-.4021	-.4835				
.565				-.2979						
.600								-.2662		
.633	-.1503									
.637			-.1323							
.650							-.1870			
.670									-.1989	
.700		-.1803				-.0880				
.723										-.3321
.725					.0123					
.727	-.2048									
.750							-.1217	-.1690		
.760				.2249						
.775					.1332	-.1044				
.793	.1697									
.798			.2621							
.808				.5291						
.834		.2193								
.839			.5726							
.840					.5798	.0451	-.0532			
.857				.6144						
.862									-.1516	

AMES 11-073(OA148) -140A/B/C ORB LEFT WING TOP (XEBU72)

ALPHA (2) = .045 BETA (1) = -3.865

SECTION (1)LEFT WING TOP SURF DEPENDENT VARIABLE CP

2Y/BW	.2350	.2990	.3640	.4270	.5340	.6730	.7800	.8870	.9720	1.0000
X/CW										
.865		.5652								
.879			.5729							
.900		.4992			.5910			-.1221		
.905				.5189						
.919			.4858							
.950					.4894	.5420	-.0233			
.953				.4448						
.955			.4308							
.965		.4477								

ALPHA (2) = .050 BETA (2) = .176 MACH = 1.2470 Q = 599.89 P = 551.11 RN/L = 3.0108

SECTION (1)LEFT WING TOP SURF DEPENDENT VARIABLE CP

2Y/BW	.2350	.2990	.3640	.4270	.5340	.6730	.7800	.8870	.9720	1.0000
X/CW										
.000	-.1009	-.0618	-.0276	.3713	.6458	.5846	.5489	.5542	-.2964	
.010		-.0916	-.0095		.4881	.5181	.4819	.3888		
.020		-.1183		.0000	.3882	.3798	.3656	.3376	-.1265	
.040			.0122	.1717						
.041	-.1567									
.050					.1806	.1511	.1441	.1408		
.069									-.1976	
.080					.0090					
.081				.0700						
.086			.0673							
.094		-.1438								
.113	-.1395									
.150					-.1736	-.1800	-.1634	-.1405		
.157									-.3565	
.163			.0000							
.177				-.0787						
.225		-.0246								
.246			-.0436							
.247	-.1233									
.250					-.2749	-.3273	-.3312	-.3226		
.274				-.1813						
.345									-.3941	
.352		.0644								
.390			-.1524							
.400					-.3733	-.4497		-.5062		
.402				-.3335						
.418										-.1756
.429	-.0100									

AMES 11-073(OA148) -140A/B/C ORB LEFT WING TOP (XEBU72)

ALPHA (2) = .050 BETA (2) = .176

SECTION (1)LEFT WING TOP SURF DEPENDENT VARIABLE CP

2Y/BW	.2350	.2990	.3640	.4270	.5340	.6730	.7800	.8870	.9720	1.0000
X/CW										
.497		-.1171								
.503									-.3317	
.547	-.0243									
.550					-.3823	-.4671				
.565				-.2323						
.600								-.2651		
.633	-.1724									
.637			-.0395							
.650							-.1071			
.670									-.1375	
.700		-.0771				-.1191				
.723										-.3010
.725					.0779					
.727	-.1825									
.750							-.0919	-.1556		
.760				.2105						
.775					.2497	-.0779				
.793	.2094									
.798			.2069							
.808				.4951						
.834		.1271								
.839			.5124							
.850					.5596	.2653	-.0408			
.857				.5239						
.862									-.1246	
.865		.5027								
.879			.4850							
.900		.4090			.5021			-.1017		
.905				.4546						
.919			.4174							
.950					.4335	.5133	-.0152			
.953				.3904						
.955			.3730							
.965		.3764								

AMES 11-073(OA148) -140A/B/C ORB LEFT WING TOP (XEBU72)

ALPHA (2) = .045 BETA (3) = 4.247 MACH = 1.2470 Q = 599.89 P = 551.11 RN/L = 3.0108

SECTION (1)LEFT WING TOP SURF DEPENDENT VARIABLE CP

2Y/BW	.2350	.2990	.3640	.4270	.5340	.6730	.7800	.8870	.9720	1.0000
X/CW										
.000	-.1137	-.1563	-.0862	.3247	.5830	.5080	.4666	.4682	-.2122	
.010		-.1942	-.0564		.4034	.4252	.3873	.3017		
.020		-.2007		.0000	.3135	.2956	.2784	.2513	-.1752	
.040			-.0132	.1315						
.041	-.1949									
.050					.1257	.0929	.0815	.0753		
.069									-.2366	
.080					-.0280					
.081				.0440						
.086			.0456							
.094		-.1610								
.113	-.1968									
.150					-.1857	-.2164	-.2045	-.1786		
.157									-.3855	
.163			.0000							
.177				-.0781						
.229		-.0352								
.246			-.0380							
.247	-.1268									
.250					-.2808	-.3318	-.3483	-.3515		
.274				-.1732						
.345									-.3496	
.362		.0642								
.390			-.1497							
.400					-.3709	-.4444		-.5201		
.402				-.3173						
.418										-.2181
.429	.0019									
.497		-.1212								
.503									-.1708	
.547	-.0191									
.550					-.2567	-.4515				
.565				-.0869						
.500								-.2306		
.633	-.1798									
.637			-.0018							
.650							-.1211			
.670									-.0966	
.700		-.0168				-.1298				
.723										-.2862
.725					.1154					
.727	-.1285									
.750							-.0807	-.1408		
.760				.1683						
.775					.3503	.0824				

AMES 11-073(OA148) -140A/B/C ORB LEFT WING TOP (XEBU72)

ALPHA (2) = .045 BETA (3) = 4.247

SECTION (1)LEFT WING TOP SURF DEPENDENT VARIABLE CP

2Y/BW	.2350	.2990	.3640	.4270	.5340	.6730	.7800	.8870	.9720	1.0000
X/CW										
.793	.2163									
.798			.1423							
.808				.4616						
.834		.0494								
.839			.4459							
.850					.4961	.4113	-.0028			
.857				.4495						
.862									-.1147	
.865		.4522								
.879			.4135							
.900		.3503			.4280			-.0763		
.905				.3939						
.919			.3600							
.950					.3864	.4663	.2003			
.953				.3405						
.955			.3197							
.965		.3231								

ALPHA (3) = 3.983 BETA (1) = -3.876 MACH = 1.2481 Q = 600.17 P = 550.40 RN/L = 3.0052

SECTION (1)LEFT WING TOP SURF DEPENDENT VARIABLE CP

2Y/BW	.2350	.2990	.3640	.4270	.5340	.6730	.7800	.8870	.9720	1.0000
X/CW										
.000	-.0019	-.0037	-.1101	.4009	.7349	.7134	.6894	.6729	.0502	
.010		-.0594	-.1232		.3459	.4457	.4061	.2754		
.020		-.0799		.0000	.2347	.2685	.2535	.2078	-.1283	
.040			-.0901	.0271						
.041	-.0776									
.050					.0188	.0206	.0130	-.0080		
.069									-.1866	
.080					-.1575					
.081				-.0917						
.086			-.0206							
.094		-.1379								
.113	-.0676									
.150					-.3543	-.3373	-.2884	-.2582		
.157									-.3878	
.163			.0000							
.177				-.2333						
.229		-.1088								
.246			-.1413							
.247	-.0981									
.250					-.4497	-.4782	-.4571	-.4246		

AMES 11-073(OA148) -140A/B/C ORB LEFT WING TOP (XEBU72)

ALPHA (3) = 3.983 BETA (1) = -3.876

SECTION (1)LEFT WING TOP SURF DEPENDENT VARIABLE CP

2Y/BW	2350	.2990	.3640	.4270	.5340	.6730	.7800	.8870	.9720	1.0000
X/CW										
.274				-.3320						
.345									-.4631	
.362		-.0056								
.390			-.2617							
.400					-.5042	-.5904		-.4489		
.402				-.4254						
.418										-.2285
.429	-.0501									
.497		-.1885								
.503									-.4143	
.547	-.0774									
.550					-.5123	-.5080				
.585				-.4035						
.600								-.3215		
.633	-.2535									
.637			-.3518							
.650							-.3474			
.670									-.3713	
.700		-.3289				-.2905				
.723										-.3730
.725					-.1175					
.727	-.2983									
.750							-.2966	-.2663		
.760				.0218						
.775					-.1414	-.1830				
.793	.0020									
.790			.0952							
.808				.1880						
.834		.0581								
.839			.4075							
.850					.0776	-.2478	-.2653			
.857				.4607						
.862									-.3130	
.865		.5429								
.879			.5387							
.900		.4543			.3177			-.2104		
.905				.5310						
.919			.4795							
.950					.5054	-.0481	-.2372			
.953				.4543						
.955			.4235							
.965		.4290								

AMES 11-073(OA148) -140A/B/C ORB LEFT WING TOP (XEBU72)

ALPHA (3) = 3.983 BETA (2) = .181 MACH = 1.2481 Q = 600.17 P = 550.40 RN/L = 3.0062

SECTION (1)LEFT WING TOP SURF DEPENDENT VARIABLE CP

2Y/BW	.2350	.2930	.3640	.4270	.5340	.6730	.7800	.8870	.9720	1.0000
X/CW										
.000	-.0262	-.1434	-.2907	.2804	.6394	.6229	.6003	.5793	-.0257	
.010		-.2035	-.2500		.2311	.3456	.3089	.1832		
.020		-.1956		.0000	.1453	.1859	.1720	.1143	-.2048	
.040			-.1448	-.0364						
.041	-.1370									
.050					-.0361	-.0366	-.0486	-.0718		
.069									-.2511	
.080					-.1921					
.081				-.1319						
.086			-.0590							
.094		-.2085								
.113	-.1470									
.150					-.3601	-.3626	-.3240	-.2977		
.157									-.4260	
.153			.0000							
.177				-.2247						
.229		-.1064								
.246			-.1459							
.247	-.1580									
.250					-.4371	-.4890	-.4738	-.4518		
.274				-.3071						
.345									-.4842	
.362		-.0148								
.380			-.2519							
.400					-.4832	-.5763		-.4888		
.402				-.4135						
.418										-.3703
.479	-.0505									
.497		-.1985								
.503									-.4586	
.517	-.0846									
.540					-.4959	-.5727				
.565				-.3849						
.600								-.3463		
.633	-.2664									
.637			-.2781							
.650							-.3479			
.670									-.3771	
.700		-.3256				-.2525				
.723										-.4537
.725					-.1192					
.727	-.3001									
.750							-.3135	-.2846		
.760				.0402						
.775					-.0803	-.1547				

AMES 11-073(OA148) -140A/B/C ORB LEFT WING TOP (XEBU72)

ALPHA (3) = 3.993 BETA (2) = .181

SECTION (1)LEFT WING TOP SURF DEPENDENT VARIABLE CP

2Y/BW	.2350	.2990	.3640	.4270	.5340	.6730	.7800	.8870	.9720	1.0000
X/CW										
.793	.1156									
.798			.0291							
.800				.2404						
.834		-.0177								
.839			.4104							
.850					.1871	-.1795	-.2656			
.857				.3950						
.870									-.2888	
.890		.5263								
.899			.4231							
.900		.3581			.3885			-.2319		
.905				.4193						
.919			.3797							
.950					.4227	.1135	-.2143			
.953				.3745						
.955			.3475							
.966		.3469								

ALPHA (3) = 3.994 BETA (3) = 4.240 MACH = 1.2481 Q = 500.17 P = 550.40 RN/L = 3.0062

SECTION (1)LEFT WING TOP SURF DEPENDENT VARIABLE CP

2Y/BW	.2350	.2990	.3640	.4270	.5340	.6730	.7800	.8870	.9720	1.0000
X/CW										
.000	-.0596	-.3182	-.3809	.1550	.5481	.5343	.5147	.4848	-.1269	
.010		-.3599	-.2803		.1368	.2362	.1959	.0672		
.020		-.3239		.0000	.0647	.0916	.0737	.0088	-.2972	
.040			-.2162	-.0759						
.041	-.1789									
.050					-.0919	-.1029	-.1248	-.1549		
.069									-.3262	
.080					-.2134					
.081				-.1382						
.085			-.1688							
.094		-.2717								
.113	-.2027									
.150					-.3544	-.3941	-.3673	-.3489		
.157									-.4693	
.163			.0000							
.177				-.2177						
.229		-.1115								
.245			-.1044							
.247	-.2034									
.250					-.4134	-.4973	-.4981	-.4865		

AMES 11-073(OA148) -140A/B/C ORB LEFT WING TOP (XEBU72)

ALPHA (3) = 3.984 BETA (3) = 4.240

SECTION (1)LEFT WING TOP SURF DEPENDENT VARIABLE CP

2Y/BW	.2350	.2990	.3640	.4270	.5340	.6730	.7800	.8870	.9720	1.0000
X/CW										
.274				-.2845						
.315									-.4681	
.362		-.0032								
.390			-.2304							
.400					-.4690	-.5719		-.5122		
.402				-.3978						
.418										-.5789
.425	-.0472									
.497		-.1967								
.503									-.4197	
.547	-.0824									
.550					-.4621	-.5642				
.565				-.3347						
.600								-.3619		
.633	-.2735									
.637			-.2164							
.650							-.3218			
.670									-.2788	
.700		-.2989				-.2043				
.723										-.4717
.725					-.0680					
.727	-.2901									
.750							-.3018	-.2889		
.760				.0284						
.775					.0399	-.1401				
.793	.1445									
.798			-.0809							
.808				.3168						
.834		-.0447								
.839			.4138							
.850					.2934	-.0605	-.2239			
.857				.3363						
.862									-.1946	
.865		.4938								
.879			.3448							
.900		.2710			.3676			-.2569		
.905				.3067						
.919			.2683							
.950					.3394	.3270	-.1546			
.953				.2750						
.955			.2681							
.965		2602								

AMES 11-073:OA148) -140A/B/C ORB LEFT WING TOP (XE8U72)

ALPHA (4) = 7.933 BETA (1) = -3.872 MACH = 1.2470 Q = 599.90 P = 351.11 RN/L = 3.0127

SECTION (1)LEFT WING TOP SURF DEPENDENT VARIABLE CP

2Y/BW→	.2350	.2990	.3640	.4270	.5340	.6730	.7800	.8870	.9720	1.0000
X/CW										
.000	.0546	-.1152	-.3445	.2252	.6465	.6661	.6676	.6208	-.0817	
.010		-.2071	-.3615		.0431	.1986	.1568	.0056		
.020		-.1885		.0000	-.0677	.0211	.0158	-.0664	-.3881	
.040			-.2638	-.2374						
.041	-.0658									
.050					-.2417	.1987	-.2055	-.2496		
.069									-.4082	
.080					-.3843					
.081				-.3614						
.086			-.1900							
.094		-.1792								
.113	-.0694									
.150					-.5532	-.5010	-.4686	-.4443		
.157									-.4508	
.163			.0000							
.177				-.4692						
.229		-.1694								
.246			-.3175							
.247	-.1042									
.250					-.6322	-.6166	-.5026	-.4470		
.274				-.4421						
.345									-.4333	
.362		-.1338								
.390			-.3525							
.400					-.6418	-.5946		-.4501		
.402				-.5026						
.418										-.4447
.429	-.1517									
.497		-.2845								
.503									-.3893	
.547	-.1589									
.550					-.4913	-.5295				
.565				-.4645						
.600								-.4017		
.633	-.3368									
.637			-.4474							
.650							-.4370			
.670									-.3568	
.700		-.4196				-.5075				
.723										-.3258
.725					-.3214					
.727	-.3644									
.750							-.4119	-.3814		
.760				-.0996						
.775					-.2869	-.3800				

AMES 11-073(OA148) -140A/B/C ORB LEFT WING TOP (XEBU72)

ALPHA (4) = 7.933 BETA (1) = -3.872

SECTION (1)LEFT WING TOP SURF DEPENDENT VARIABLE CP

2Y/BW	.2350	.2990	.3640	.4270	.5340	.6730	.7800	.8870	.9720	1.0000
X/CW										
.793	-.2002									
.798			-.0071							
.808				.0659						
.834		.0536								
.829			.3104							
.850					-.1828	-.4109	-.3708			
.857				.1484						
.862									-.3348	
.865		.6672								
.879			.3738							
.900		.4032			-.0890			-.3118		
.905				.2337						
.919			.4132							
.950					.0060	-.3142	-.3109			
.953				.3257						
.955			.3834							
.965		.3760								

ALPHA (4) = 7.940 BETA (2) = .173 MACH = 1.2470 Q = 599.90 P = 551.11 RN/L = 3.0127

SECTION (1)LEFT WING TOP SURF DEPENDENT VARIABLE CP

2Y/BW	.2350	.2990	.3640	.4270	.5340	.6730	.7800	.8870	.9720	1.0000
X/CW										
.000	-.0015	-.3249	-.5540	-.0178	.5026	.5516	.5501	.4966	-.2685	
.010		-.4007	-.5157		-.1015	.0668	.0224	-.1188		
.020		-.3744		.0000	-.2044	-.0842	-.0957	-.1773	-.5086	
.040			-.4132	-.3765						
.041	-.1285									
.050					-.3330	-.2777	-.2894	-.3381		
.069									-.4729	
.080					-.4285					
.081				-.3189						
.086			-.3127							
.094		-.2568								
.113	-.1548									
.150					-.5613	-.5388	-.5106	-.4942		
.157									-.4832	
.163			.0000							
.177				-.3760						
.229		-.2391								
.245			-.2731							
.247	-.1715									
.250					-.6051	-.6321	-.5484	-.4844		

AMES :1-073(OA148) -140A/B/C ORB LEFT WING TOP (XEBU72)

ALPHA (4) = 7.940 BETA (2) = .173

SECTION (1)LEFT WING TOP SURF DEPENDENT VARIABLE CP

2Y/BW	.2350	.2990	.3640	.4270	.5340	.6730	.7800	.8870	.9720	1.0000
X/CW										
.274				-.4018						
.345									-.4650	
.362		-.1202								
.390			-.3432							
.400					-.5783	-.6440		-.4954		
.402				-.4677						
.418										-.4542
.429	-.1572									
.497		-.2883								
.503									-.4349	
.547	-.1515									
.550					-.5182	-.5641				
.555				-.4703						
.600								-.4458		
.633	-.3384									
.637			-.4711							
.650							-.4711			
.670									-.4203	
.700		-.4127				-.5086				
.723										-.3693
.725					-.1707					
.727	-.3624									
.750							-.4510	-.3818		
.760				-.0610						
.775					-.1032	-.3234				
.793	-.0233									
.798			-.1427							
.808				.1940						
.834		-.0501								
.839			.4003							
.850					.0237	-.3629	-.4166			
.857				.2040						
.862									-.4115	
.865		.5595								
.873			.3618							
.900		.3289			.0684			-.2988		
.905				.1890						
.919			.3138							
.950					.1146	-.1708	-.3741			
.953				.1904						
.955			.2970							
.965		.2994								

AMES 11-073(OA148) -140A/B/C ORB LEFT WING TOP (XEBU72)

ALPHA (4) = 7.943 BETA (3) = 4.236 MACH = 1.2470 Q = 599.90 P = 551.11 RN/L = 3.0127

SECTION (1)LEFT WING TOP SURF DEPENDENT VARIABLE CP

2Y/BW	.2350	.2990	.3640	.4270	.5340	.6730	.7800	.8870	.9720	1.0000
X/CW										
.000	-.0525	-.5390	-.5118	-.1858	.3659	.4226	.4183	.3577	-.4673	
.010		-.4844	-.5027		-.2138	-.0618	-.1162	-.2486		
.020		-.4782		.0000	-.2954	-.1920	-.2164	-.2984	-.5198	
.040			-.4686	-.2201						
.041	-.1735									
.050					-.3867	-.3624	-.3716	-.4333		
.069									-.5229	
.080					-.4635					
.081				-.2730						
.086			-.4155							
.094		-.5040								
.113	-.2119									
.150					-.5684	-.5726	-.5521	-.5492		
.157									-.5296	
.163			.0000							
.177				-.3035						
.229		-.2616								
.246			-.3697							
.247	-.2306									
.250					-.4947	-.6448	-.6403	-.5297		
.279				-.3583						
.345									-.5291	
.402		-.0343								
.420			-.2665							
.400					-.5117	-.6618		-.5504		
.402				-.4645						
.418										-.5053
.429	-.1385									
.497		-.2440								
.503									-.5052	
.547	-.1346									
.550					-.5155	-.5842				
.565				-.4817						
.600								-.4739		
.633	-.3549									
.637			-.4267							
.650							-.5416			
.670									-.4940	
.700		-.3907				-.4492				
.723										-.4135
.725					-.1103					
.727	-.3609									
.750							-.4937	-.4040		
.760				-.0956						
.775					-.0045	-.2028				

AMES 11-073(OA148) -140A/B/C ORB LEFT WING TOP (XE8U72)

ALPHA (4) = 7.943 BETA (3) = 4.236

SECTION (1)LEFT WING TOP SURF DEPENDENT VARIABLE CP

2Y/BW	.2350	.2990	.3640	.4270	.5340	.6730	.7800	.8870	.9720	1.0000
X/CW										
.793	.0413									
.798			-.1556							
.808				.2487						
.834		-.1202								
.839			.3403							
.850					.1930	-.0995	-.4724			
.857				.1998						
.862									-.4630	
.865		.2550								
.879			.2876							
.900		.2228			.1794			-.3597		
.905				.1768						
.919			.2261							
.950					.1741	.0646	-.3939			
.953				.1803						
.955			.2099							
.965		.2256								

ALPHA (5) = 12.023 BETA (1) = -3.855 MACH = 1.2460 Q = 599.73 P = 551.81 RN/L = 3.0130

SECTION (1)LEFT WING TOP SURF DEPENDENT VARIABLE CP

2Y/BW	.2350	.2990	.3640	.4270	.5340	.6730	.7800	.8870	.9720	1.0000
X/CW										
.000	.0531	-.3194	-.4902	.0028	.5173	.5588	.5432	.4464	-.3625	
.010		-.3903	-.4582		-.1847	-.0415	-.1263	-.2840		
.020		-.3805		.0000	-.3000	-.2021	-.2511	-.3493	-.5291	
.040			-.3772	-.4586						
.041	-.0589									
.060					-.4475	-.3912	-.4154	-.4810		
.069									-.4893	
.080					-.5485					
.081				-.5179						
.066			-.2975							
.094		-.2557								
.113	-.0742									
.150					-.6785	-.6322	-.5766	-.5370		
.157									-.4826	
.163			.0000							
.177				-.5994						
.229		-.2252								
.245			-.3804							
.247	-.1062									
.250					-.6375	-.5960	-.5325	-.5425		

AMES 11-073(OA148) -140A/B/C ORB LEFT WING TOP (XE8U72)

ALPHA (5) = 12.023 BETA (1) = -3.855

SECTION (1)LEFT WING TO) SURF DEPENDENT VARIABLE CP

2Y/BW	.2350	.2990	.3540	.4270	.5340	.6730	.7800	.8870	.9720	1.0000
X/CW										
.274				-.5689						
.345									-.4826	
.362		-.1904								
.390			-.4743							
.400					-.6117	-.5840		-.5428		
.402				-.5851						
.418										-.4823
.429	-.1897									
.437		-.4542								
.503									-.4733	
.547	-.2852									
.550					-.5843	-.5494				
.565				-.5477						
.600								-.5019		
.633	-.4693									
.637			-.5077							
.650							-.4860			
.670									-.4419	
.700		-.4941				-.5270				
.723										-.4298
.725					-.5191					
.727	-.4424									
.750							-.4505	-.4748		
.760				-.2860						
.775					-.4826	-.5279				
.793	-.1484									
.798			-.2903							
.802				-.1962						
.834		-.0558								
.839			.0940							
.850					-.4098	-.4673	-.4121			
.857				-.1440						
.862									-.4116	
.865		.2884								
.879			.0225							
.900		.2688			-.3757			-.4347		
.905				-.0583						
.919			-.0144							
.950					-.3198	-.4499	-.3640			
.953				.0271						
.955			.1284							
.965		.2442								

AMES 11-073(OA148) -140A/B/C ORB LEFT WING TOP (XEBU72)

ALPHA (5) = 12.037 BETA (2) = .182 MACH = 1.2460 Q = 599.73 P = 551.81 RN/L = 3.0130

SECTION (1)LEFT WING TOP SURF DEPENDENT VARIABLE CP

2Y/BW	.2350	.2990	.3640	.4270	.5340	.6730	.7800	.8870	.9720	1.0000
X/CW										
.000	-.0250	-.4783	-.4726	-.2089	.3399	.3843	.3702	.2709	-.5280	
.010		-.4188	-.4649		-.3411	-.1997	-.2849	-.4379		
.020		-.4052		.0000	-.4428	-.3463	-.3995	-.4857	-.5614	
.040			-.4482	-.4845						
.041	-.1348									
.050					-.5625	-.5030	-.5320	-.5941		
.069									-.5158	
.080					-.6444					
.081				-.5017						
.086			-.4215							
.094		-.4618								
.113	-.1773									
.150					-.7425	-.6846	-.5925	-.5991		
.157									-.5096	
.163			.0000							
.177				-.4934						
.229		-.5356								
.245			-.[illegible]30							
.247	-.1673									
.250					-.6802	-.6378	-.5682	-.6135		
.274				-.5160						
.345									-.5024	
.362		-.3895								
.390			-.4507							
.400					-.6613	-.6261		-.5428		
.402				-.5198						
.418										-.4950
.449	-.2576									
.497		-.4162								
.503									-.4996	
.547	-.2661									
.550					-.5887	-.5900				
.555				-.5239						
.600								-.5212		
.633	-.4567									
.637			-.5486							
.650							-.5366			
.670									-.4941	
.700		-.4788				-.5482				
.723										-.4793
.725					-.3793					
.727	-.4387									
.750							-.4933	-.5175		
.760				-.1829						
.775					-.3628	-.5565				

AMES 11-073(OA148) -140A/B/C ORB LEFT WING TOP (XEBU72)

ALPHA (5) = 12.037 BETA (2) = .182

SECTION (1)LEFT WING TOP SURF DEPENDENT VARIABLE CP

2Y/BW	.2350	.2990	.3640	.4270	.5340	.6730	.7800	.8870	.9720	1.0000
X/CW										
.793	-.1349									
.798			-.1953							
.808				-.0066						
.834		-.1005								
.839			.2488							
.853					-.2833	-.4959	-.4563			
.857				-.1357						
.862									-.4840	
.865		.2190								
.879			.1928							
.900		.2601			-.2217			-.4976		
.905				-.1840						
.919			.1104							
.950					-.0830	-.4330	-.3947			
.953				-.1557						
.955			.1262							
.965		.2378								

ALPHA (5) = 12.032 BETA (3) = 4.249 MACH = 1.2460 Q = 599.73 P = 551.81 MN/L = 3.0130

SECTION (1)LEFT WING TOP SURF DEPENDENT VARIABLE CP

2Y/BW	.2350	.2990	.3640	.4270	.5340	.6730	.7800	.8870	.9720	1.0000
X/CW										
.000	-.0951	-.5148	-.5238	-.4446	.1502	.1931	.1824	.0883	-.6295	
.010		-.5026	-.5214		-.4915	-.3629	-.4253	-.5472		
.020		-.4988		.0000	-.5690	-.4913	-.5197	-.5926	-.5688	
.040			-.5295	-.4496						
.041	-.2037									
.050					-.6634	-.6104	-.6268	-.6748		
.069									-.5559	
.080					-.6794					
.081				-.4395						
.086			-.4970							
.094		-.5703								
.113	-.2312									
.150					-.6823	-.7068	-.6557	-.6371		
.157									-.5492	
.163			.0000							
.177				-.4520						
.223		-.6753								
.246			-.4805							
.247	-.2652									
.250					-.6533	-.6862	-.6541	-.6051		

AMES 11-073(OA148) -140A/B/C ORB LEFT WING TOP (XEBU72)

ALPHA (5) = 12.032 BETA (3) = 4.249

SECTION (1)LEFT WING TOP SURF DEPENDENT VARIABLE CP

2Y/BW	.2350	.2990	.3640	.4270	.5340	.6730	.7800	.8870	.9720	1.0000
X/CW										
.274				-.4740						
.345									-.5444	
.362		-.3789								
.390			-.5515							
.400					-.6443	-.6434		-.5721		
.402				-.5313						
.419										-.5388
.429	-.3063									
.497		-.3832								
.503									-.5387	
.547	-.2308									
.550					-.5479	-.6259				
.565				-.5414						
.600								-.5481		
.633	-.4221									
.637			-.5174							
.650							-.6098			
.670									-.5208	
.700		-.4172				-.5580				
.723										-.4881
.725					-.1102					
.727	-.4122									
.750							-.5740	-.5358		
.760				-.2010						
.775					-.0401	-.4136				
.793	-.0282									
.798			-.2080							
.809				.0382						
.820		-.1969								
.833			.2174							
.850					-.0968	-.4121	-.5333			
.857				.1653						
.862									-.4949	
.865		.1012								
.879			.3061							
.900		.1546			-.1384			-.5150		
.905				.0203						
.919			.2222							
.950					-.1974	-.1840	-.4665			
.953				-.0499						
.955			.1481							
.965		.1715								

AMES 11-073(OA148) -140A/B/C ORB LEFT WING TOP (XE8U73) (05 AUG 75)

REFERENCE DATA

SREF = 2690.0000 SQ.FT. XMRP = 1076.6800 IN. XO
LREF = 474.8000 IN. YMRP = .0000 IN. YO
BREF = 936.0680 IN. ZMRP = 375.0000 IN. ZO
SCALE = .0300

PARAMETRIC DATA

RUDDER = -5.000 SPDBRK = 55.000
BDFLAP = 16.300 L-ELVN = -10.000
R-ELVN = -10.000 MACH = 1.100

ALPHA (1) = -3.958 BETA (1) = -3.850 MACH = 1.1008 Q = 600.53 P = 707.91 RN/L = 3.1821

SECTION (1)LEFT WING TOP SURF DEPENDENT VARIABLE CP

2Y/BW	.2350	.2990	.3640	.4270	.5340	.6730	.7800	.8870	.9720	1.0000
X/CW										
.000	-.2849	-.1130	-.1538	.2696	.6015	.5307	.4802	.4582	-.6250	
.010		-.0523	-.0433		.7232	.6920	.6571	.5750		
.020		-.0475		.0000	.6444	.6015	.5702	.5324	-.1281	
.040			.0422	.4757						
.041	-.1440									
.050					.4317	.3867	.3719	.3437		
.069									-.1929	
.080					.2477					
.081				.3580						
.086			.2484							
.094		-.0145								
.113	-.1135									
.150					.0252	.0043	.0190	.0021		
.157									-.3462	
.163			.0000							
.177				.0810						
.229		.0284								
.245			.1743							
.247	.0031									
.250					-.1379	-.1972	-.2210	-.2502		
.274				-.0265						
.345									-.2622	
.362		.2139								
.390			-.0107							
.400					.0390	-.0276		-.4603		
.402				-.1202						
.418										-.7050
.429	.1184									
.497		.0182								
.503								-	.1162	
.547	.1310									
.550					.1662	.0619				
.555				.2420						
[illegible]								.2562		
[illegible]	.0029									
[illegible]			.2939							
.650							.3254			
.670									.3697	

AMES 11-073(OA148) -140A/B/C ORB LEFT WING TOP (XE3U73)

ALPHA (1) = -3.958 , BETA (1) = -3.850

SECTION (1)LEFT WING TOP SURF DEPENDENT VARIABLE CP

2Y/BW	.2350	.2990	.3640	.4270	.5340	.6730	.7800	.8870	.9720	1.0000
X/CW										
.700		.3070				.3777				
.723										-.8264
.725					.4062					
.727	.2688									
.750							.7278	.5929		
.760				.3992						
.775					.7042	.6077				
.793	.4325									
.798			.3822							
.808				.6947						
.834		.3644								
.839			.6628							
.850					.5551	.4929	.5140			
.857				.5442						
.862									.2959	
.865		.5530								
.879			.5326							
.900		.4868			.4503			.4325		
.905				.4515						
.919			.4360							
.950					.3720	.4239	.4087			
.953				.3656						
.960			.3641							
.965		.3856								

ALPHA (1) = -3.953 BETA (2) = .190 MACH = 1.1008 Q = 600.53 P = 707.91 RN/L = 3.1821

SECTION (1)LEFT WING TOP SURF DEPENDENT VARIABLE CP

2Y/BW	.2350	.2990	.3640	.4270	.5340	.6730	.7800	.8870	.9720	1.0000
X/CW										
.000	-.2732	-.1152	-.1019	.2842	.5414	.4562	.3940	.4064	-.7114	
.010		-.0911	-.0266		.6569	.6255	.6003	.5364		
.020		-.0769		.0000	.5882	.5508	.5288	.4973	-.2108	
.040			.0403	.4164						
.041	-.2377									
.050					.4020	.3715	.3532	.3336		
.069									-.2489	
.080					.2358					
.081				.3239						
.086			.2067							
.094		-.0412								
.113	-.1809									
.150					.0420	.0390	.0311	.0139		

DATE 11 FEB 76 TABULATED PRESSURE DATA - OA148 (AMES 11-073-1)

AMES 11-073(OA148) -140A/B/C ORB LEFT WING TOP (XEBU73)

ALPHA (1) = -3.953 BETA (2) = .190

SECTION (1)LEFT WING TOP SURF DEPENDENT VARIABLE CP

2Y/BW	.2350	.2990	.3640	.4270	.5340	.6730	.7800	.8870	.9720	1.0000
X/CW										
.157									-.3579	
.163			.0000							
.177				.0888						
.229		.0160								
.246			.1621							
.247	-.0152									
.250					-.0996	-.1547	-.1719	-.2301		
.274				-.0099						
.345									-.2797	
.362		.1871								
.390			-.0018							
.400					.0527	-.0367		-.3026		
.402				-.0408						
.418										-.7947
.429	.0954									
.437		.0219							-.1712	
.503										
.547	.1202									
.550					.0935	-.0455				
.565				.1927						
.600								.1735		
.633	.0297									
.637			.2431							
.650							.2333			
.670									.3350	
.700		.2652				.3097				
.723										-.9010
.725					.3384					
.727	.2348									
.750							.5714	.5944		
.760				.3322						
.775					.6881	.5747				
.793	.3764									
.798			.3144							
.808				.6550						
.834		.2845								
.839			.6175							
.850					.5169	.4528	.5059			
.857				.5013						
.862									.2749	
.865		.6094								
.879			.4836							
.900		.4273			.4139			.4133		
.905				.4072						
.919			.3885							

AMES 11-073(OA148) -140A/B/C ORB LEFT WING TOP (XEBU73)

ALPHA (1) = -3.950 BETA (2) = .190

SECTION (1)LEFT WING TOP SURF DEPENDENT VARIABLE CP

2Y/BW	.2350	.2990	.3640	.4270	.5340	.6730	.7800	.8870	.9720	1.0000
X/CW										
.950					.3479	.4013	.4010			
.953				.3344						
.955			.3258							
.985		.3423								

ALPHA (1) = -3.960 BETA (3) = 4.266 MACH = 1.1008 Q = 600.53 P = 707.91 RN/L = 3.1821

SECTION (1)LEFT WING TOP SURF DEPENDENT VARIABLE CP

2Y/BW	.2350	.2990	.3640	.4270	.5340	.6730	.7800	.8870	.9720	1.0000
X/CW										
.000	-.2755	-.1473	-.0435	.3377	.5056	.3807	.3096	.3126	-.7704	
.010		-.0931	-.0004		.6042	.5543	.5153	.4553		
.020		-.0774		.0000	.5423	.4837	.4538	.4235	-.3024	
.040			.0652	.4013						
.041	-.3032									
.050					.3727	.3203	.3031	.2788		
.069									-.3129	
.080					.2225					
.081				.3201						
.086			.2271							
.094		- .0605								
.113	-.2436									
.150					.0439	.0172	.0141	-.0031		
.157									-.3756	
.163			.0000							
.177				.1248						
.229		.0299								
.246			.1821							
.247	-.0354									
.250					-.0842	-.1571	-.1661	-.1842		
.274				.0148						
.345									-.3024	
.362		.2153								
.390			.0181							
.400					.0408	-.0374		-.3017		
.402				-.0369						
.418										-.3937
.429	.1212									
.497		.0550								
.503									-.1544	
.547	.1422									
.550					.0577	-.0684				
.565				.1510						

AMES 11-[illegible] .0A/B/C ORB LEFT WING TOP (XE8U73)

ALPHA (1) = -3.950 BETA (3) = 4.266

SECTION (1)LEFT WING TOP SURF DEPE[illegible] .E CP

2Y/BW	.2350	.2990	.3640	.4270	.5340	.67[illegible]	.7800	.8870	.9720	1.0000
X/CW										
.600								.0719		
.633	.0513									
.637			.1925							
.650							.0832			
.670									.3069	
.700		.2212				.2222				
.723										-.7950
.725					.2494					
.727	.1939									
.750							.6070	.5180		
.760				.2427						
.775					.6573	.5247				
.793	.3197									
.799			.2230							
.808				.6128						
.834		.1769								
.839			.5676							
.850					.4730	.3983	.4807			
.857				.4488						
.862									.2366	
.865		.5668								
.879			.4260							
.900		.3674			.3730			.4008		
.905				.3641						
.919			.3384							
.950					.3218	.3726	.3780			
.953				.2968						
.955			.2878							
.965		.3064								

ALPHA (2) = .047 BETA (1) = -3.869 MACH = 1.1000 Q = 599.94 P = 708.37 RN/L = 3.1830

SECTION (1)LEFT WING TOP SURF DEPENDENT VARIABLE CP

2Y/BW	.2350	.2990	.3640	.4270	.5340	.6730	.7800	.8870	.9720	1.0000
X/CW										
.000	-.1534	-.0459	-.0132	.4567	.6819	.6159	.5788	.5868	-.3870	
.010		-.0671	.0273		.5656	.5781	.5335	.4153		
.020		-.0991		.0000	.4524	.4278	.3970	.3538	-.1480	
.040			.0514	.2926						
.041	-.1587									
.050					.2116	.1656	.1434	.1200		
.069									-.2388	
.080					.0162					

AMES 11-073(OA148) -140A/B/C ORB LEFT WING TOP (XE8U73)

ALPHA (2) = .047 BETA (1) = -3.869

SECTION (1)LEFT WING TOP SURF DEPENDENT VARIABLE CP

2Y/BW	.2350	.2990	.3640	.4270	.5340	.6730	.7800	.8870	.9720	1.0000
X/CW										
.081				.1397						
.085			.1384							
.094		-.0993								
.113	-.1188									
.150					-.2233	-.2572	-.2349	-.2166		
.157									-.4390	
.163			.0000							
.177				-.0805						
.229		-.0208								
.246			.0152							
.247	-.0888									
.253					-.3378	-.4051	-.4243	-.4354		
.274				-.2262						
.345									-.1904	
[illegible]		.1091								
.370			-.1822							
.400					-.4596	-.5562		-.4878		
.402				-.3955						
.418										-.1477
.429	.0547									
.497		-.1091								
.503									-.0870	
.547	.0225									
.550					-.0268	-.1151				
.565				.0697						
.600								-.1565		
.633	-.2111									
.637			.1579							
.650							-.3887			
.670									-.0043	
.700		.1285				.1859				
.723										-.3336
.725					.3520					
.727	.0678									
.750							.2858	-.0534		
.760				.3705						
.775					.6322	.3884				
.793	.3469									
.798			.3628							
.808				.6205						
.834		.3226								
.832			.5972							
.840					.5287	.4311	.4504			
.857				.5189						
.862									-.0110	

AMES 11-073(OA148) -140A/B/C ORB LEFT WING TOP (XEBU73)

ALPHA (2) = .047 BETA (1) = -3.869

SECTION (1)LEFT WING TOP SURF DEPENDENT VARIABLE CP

2Y/BW	.2350	.2990	.3640	.4270	.5340	.6730	.7800	.8870	.9720	1.0000
X/CW										
.865		.5821								
.879			.5124							
.900		.4661			.4248			.0771		
.905				.4289						
.919			.4159							
.950					.3477	.3884	.3649			
.953				.3393						
.955			.3421							
.965		.3679								

ALPHA (2) = .052 BETA (2) = .177 MACH = 1.1000 Q = 599.94 P = 708. RN/L = 3.1830

SECTION (1)LEFT WING TOP SURF DEPENDENT VARIABLE CP

2Y/BW	.2350	.2990	.3640	.4270	.5340	.6730	.7800	.8870	.9720	1.0000
X/CW										
.000	-.1715	-.1256	-.0378	.4275	.6196	.5422	.5098	.5212	-.2155	
.010		-.1695	-.0164		.4797	.4906	.0000	.3623		
.020		-.1897		.0000	.3820	.3495	.0000	.0000	-.1427	
.040			.0313	.2357						
.041	-.2292									
.050					.1613	.1120	.0000	.0000		
.069									-.2205	
.080					-.0174					
.081				.0991						
.086			.1143							
.094		-.1163								
.113	-.1880									
.150					-.2299	-.2543	.0000	.0000		
.157									.0000	
.163			.0000							
.177				-.1003						
.229		-.0342								
.246			-.0099							
.247	-.1000									
.250					-.3278	.0000	.0000	.0000		
.274				-.2185						
.345									.0000	
.362		.0984								
.390			-.1827							
.400					-.4467	.0000		.0000		
.402				-.3752						
.418										-.1664
.429	.0627									

ORIGINAL PAGE IS OF POOR QUALITY

AMES 11-073(OA148) -140A/B/C CRB LEFT WING TOP (XEBU73)

ALPHA (2) = .052 BETA (2) = .177

SECTION (1)LEFT WING TOP SURF DEPENDENT VARIABLE CP

2Y/BW	.2350	.2990	.3640	.4270	.5340	.6730	.7800	.8870	.9720	1.0000
X/CW										
.497		-.1153								
.503									.0000	
.547	.0039									
.550					.0331	.0000				
.565				.1196						
.600								-.0853		
.633	-.2075									
.637			.1658							
.650							.0000			
.670									.0000	
.700		.1430				.0000				
.723										-.3085
.725					.3162					
.727	.1013									
.750							.0000	.0000		
.760				.3221						
.775					.5876	.0000				
.793	.3124									
.798			.3078							
.808				.5699						
.834		.2602								
.839			.5342							
.850					.0000	.0000	.0000			
.857				.4747						
.862									.0000	
.865		.5247								
.879			.4563							
.900		.4042			.0000			.0000		
.905				.3898						
.919			.3693							
.950					.0000	.0000	.3380			
.953				.3080						
.955			.3014							
.965		.3147								

AMES 11-073(OA148) -140A/B/C ORB LEFT WING TOP (XE8U73)

ALPHA (2) = .046 BETA (3) = 4.245 MACH = 1.1000 Q = 599.94 P = 708.37 RN/L = 3.1830

SECTION (1)LEFT WING TOP SURF DEPENDENT VARIABLE CP

2Y/BW	.2350	.2990	.3640	.4270	.5340	.6730	.7800	.8870	.9720	1.0000
X/CW										
.000	-.1918	-.2404	-.0653	.4235	.5916	.4893	.4397	.4358	-.1848	
.010		-.2806	-.0355		.4256	.4160	.3668	.2532		
.020		-.2818		.0000	.3312	.2836	.2481	.1984	-.2125	
.040			.0251	.2154						
.041	-.2911									
.050					.1418	.0537	.0262	.0021		
.069									-.2788	
.080					-.0324					
.091				.1040						
.085			.1218							
.094		-.1215								
.113	-.2511									
.150					-.2037	-.2669	-.2656	-.2672		
.157									-.4736	
.163			.0000							
.177				-.0701						
.229		-.0176								
.246			.0202							
.247	-.0984									
.250					-.3003	-.3694	-.3919	-.4641		
.274				-.1846						
.345									-.2242	
.362		.1122								
.390			-.1598							
.400					-.3990	-.5011		-.5763		
.402				-.3229						
.418										-.2620
.429	.0663									
.497		-.0839								
.503									-.0088	
.547	.0324									
.550					.0012	-.0899				
.565				.0783						
.600								-.1079		
.633	-.1734									
.637			.1225							
.650							.1563			
.670									.0746	
.700		.1260				.1392				
.723										-.3502
.725					.2377					
.727	.0914									
.750							.4638	.2046		
.760				.2404						
.775					.5448	.4317				

AMES 11-073(0..48) -140A/B/C ORB LEFT WING TOP (XEBU73)

ALPHA (2) = .046 BETA (3) = 4.245

SECTION (1)LEFT WING TOP SURF DEPENDENT VARIABLE CP

2Y/BW	.2350	.2990	.3640	.4270	.5340	.6730	.7800	.8870	.9720	1.0000
X/CW										
.793	.2513									
.798			.2244							
.808				.5132						
.834		.1618								
.839			.4662							
.850					.4523	.4062	.4593			
.857				.4229						
.852									-.0026	
.865		.4612								
.873			.3927							
.900		.3373			.3605			.4029		
.905				.3452						
.919			.3179							
.950					.3000	.3604	.3449			
.953				.2725						
.955			.2567							
.965		.2599								

ALPHA (3) = 4.012 BETA (1) = -3.872 MACH = 1.0998 Q = 599.99 P = 708.60 RN/L = 3.1803

SECTION (1)LEFT WING TOP SURF DEPENDENT VARIABLE CP

2Y/BW	.2350	.2990	.3640	.4270	.5340	.6730	.7800	.8870	.9720	1.0000
X/CW										
.000	-.0667	-.0753	-.1359	.4668	.7202	.6914	.6776	.6393	.0081	
.010		-.1503	-.1279		.3235	.4012	.3331	.1483		
.020		-.1727		.0000	.1991	.2074	.1701	.0804	-.2574	
.040			-.0569	.0494						
.041	-.1448									
.050					-.0406	-.0646	-.0968	-.1549		
.067									-.3207	
.080					-.2226					
.081				-.1022						
.086			-.0043							
.094		-.2244								
.113	-.1231									
.150					-.3910	-.4541	-.4196	-.4056		
.157									-.5452	
.163			.0000							
.177				-.2607						
.229		-.0812								
.245			-.1418							
.247	-.1705									
.250					-.5044	-.5850	-.5969	-.5411		

AMES 11-073(OA148) -140A/B/C ORB LEFT WING TOP (XE8U73)

ALPHA (3) = 4.012 BETA (1) = -3.872

SECTION (1)LEFT WING TOP SURF DEPENDENT VARIABLE CP

2Y/BW	.2350	.2990	.3640	.4270	.5340	.6730	.7800	.8870	.9720	1.0000
X/CW										
.274				-.3742						
.345									-.4966	
.362		.0429								
.390			-.3058							
.400					-.5865	-.6541		-.4630		
.402				-.5039						
.418										-.4366
.429	.0059									
.497		-.2006								
.503									-.4513	
.547	-.0715									
.550					-.1443	-.3769				
.565				-.1298						
.600								-.3095		
.633	-.3157									
.637			-.0834							
.650							-.2910			
.670									-.2555	
.700		-.1012				-.1969				
.723										-.3749
.725					.0547					
.727	-.2496									
.750							-.2481	-.2256		
.760				.3081						
.775					.2122	-.0138				
.793	.2480									
.798			.3125							
.808				.5494						
.834		.2601								
.839			.5952							
.850					.4272	.1402	-.1856			
.857				.5174						
.862									-.1597	
.865		.6305								
.879			.4950							
.900		.4428			.4336			-.1777		
.905				.4159						
.919			.3936							
.950					.3706	.2834	-.1484			
.953				.3289						
.955			.3268							
.965		.3508								

AMES 11-073(OA148) -140A/B/C ORB LEFT WING TOP (XE8U73)

ALPHA (3) = 4.014 BETA (2) = .182 MACH = 1.0998 Q = 599.99 P = 708.50 RN/L = 3.1803

SECTION (1)LEFT WING TOP SURF DEPENDENT VARIABLE CP

2Y/BW	.2350	.2990	.3640	.4270	.5340	.6730	.7800	.8870	.9720	1.0000
X/CW										
.000	-.1109	-.2352	-.2590	.3812	.6389	.6099	.5869	.5590	-.0837	
.010		-.3076	-.1976		.2217	.2958	.2330	.0585		
.020		-.2983		.0000	.1164	.1149	.0752	-.0087	-.3377	
.040			-.1113	.0045						
.041	-.2198									
.050					-.0913	-.1244	-.1592	-.2151		
.069									-.3856	
.080					-.2560					
.081				-.1239						
.085			-.0151							
.094		-.2959								
.113	-.2043									
.150					-.3990	-.4828	-.4473	-.4371		
.157									-.5802	
.163			.0000							
.177				-.2607						
.229		-.0949								
.245			-.1449							
.247	-.2262									
.250					-.4908	-.5839	-.6042	-.5709		
.274				-.3569						
.345									-.4828	
.362		.0387								
.390			-.3029							
.400					-.5576	-.6780		-.4909		
.402				-.4889						
.418										-.5950
.429	.0094									
.497		-.2118								
.503									-.3555	
.547	-.0837									
.550					-.1595	-.3518				
.565				-.1180						
.600								-.3284		
.633	-.3191									
.637			-.0647							
.650							-.2954			
.670									-.1485	
.700		-.0630				.0017				
.723										-.3900
.725					.0957					
.727	-.2151									
.750							-.2389	-.2375		
.760				.2710						
.775					.2685	.0832				

DATE 11 FEB 76 TABULATED PRESSURE DATA - OA148 (AMES 11-073-1) PAGE 5135

AMES 11-073(OA148) -140A/B/C ORB LEFT WING TOP (XE8U73)

ALPHA (3) = 4.014 BETA (2) = .182

SECTION (1)LEFT WING TOP SURF DEPENDENT VARIABLE CP

X/CW \ 2Y/BW	.2350	.2990	.3640	.4270	.5340	.6730	.7800	.8870	.9720	1.0000
.793	.2557									
.798			.2653							
.809				.4913						
.834		.1871								
.839			.5209							
.850					.4888	.2049	-.0858			
.857				.4636						
.862										
.865		.6212							-.1073	
.879			.4369							
.900		.3863								
.905					.4037			-.2056		
.919				.3808						
.950			.3465							
.953					.3129	.2719	.1169			
.955				.2894						
.965			.2851							
		.3094								

ALPHA (3) = 4.006 BETA (3) = 4.238 MACH = 1.0999 Q = 599.99 P = 708.60 RN/L = 3.1803

SECTION (1)LEFT WING TOP SURF DEPENDENT VARIABLE CP

X/CW \ 2Y/BW	.2350	.2990	.3640	.4270	.5340	.6730	.7800	.8870	.9720	1.0000
.000	-.1592	-.4365	-.3160	.2929	.5588	.5294	.5015	.4430	-.2810	
.010		-.4849	-.1831		.1304	.1892	.1091	-.0726		
.020		-.4470		.0000	.0454	.0269	-.0266	-.1410	-.4778	
.040			-.1062	-.0218						
.041	-.2863									
.050					-.1262	-.1881	-.2428	-.3103		
.069									-.4923	
.080					-.2692					
.091				-.1279						
.085			-.0280							
.094		-.3277								
.113	-.2863									
.150					-.3994	-.4933	-.4963	-.5043		
.157									-.5944	
.163			.0000							
.177				-.2336						
.229		-.0852								
.245			-.1444							
.247	-.2491									
.250					-.4575	-.5975	-.6248	-.6130		

AMES 11-073(OA148) -140A/B/C ORB LEFT WING TOP (XE8J73)

ALPHA (3) = 4.006 BETA (3) = 4.238

SECTION (1)LEFT WING TOP SURF DEPENDENT VARIABLE CP

2Y/BW	.2350	.2990	.3640	.4270	.5340	.6730	.7800	.8870	.9720	1.0000
X/CW										
.274				-.3191						
.345									-.4730	
.362		.0553								
.390			-.2637							
.400					-.5362	-.6548		-.5405		
.402				-.4441						
.418										-.7122
.429	.0278									
.497		-.1783								
.503									-.3103	
.547	-.0554									
.550					-.1359	-.2919				
.585				-.1492						
.600								-.3849		
.633	-.2906									
.637			-.0428							
.650							-.3186			
.670									-.1472	
.700		-.0313				-.0573				
.723										-.4098
.725					.1297					
.727	-.1596									
.750							-.2032	-.3053		
.750				.1846						
.775					.3641	.1665				
.793	.1956									
.798			.1662							
.808				.4114						
.834		.0613								
.839			.4456							
.850					.4214	.2548	.1151			
.857				.3522						
.862									-.1398	
.865		.5258								
.879			.3507							
.900		.3023			.3305			-.2235		
.905				.2881						
.919			.2787							
.950					.2651	.3190	.3140			
.953				.2244						
.955			.2306							
.965		.2495								

AMES 11-073(OA148) -140A/B/C ORB LEFT WING TOP (XEBU73)

ALPHA (4) = 7.976 BETA (1) = -3.868 MACH = 1.1000 Q = 599.94 P = 708.36 RN/L = 3.1794

SECTION (1) LEFT WING TOP SURF DEPENDENT VARIABLE CP

2Y/BW	.2350	.2990	.3640	.4270	.5340	.6730	.7800	.8870	.9720	1.0000
X/CW										
.000	-.0304	-.2231	-.5120	.2532	.6294	.6307	.6054	.5079	-.2637	
.010		-.3211	-.5182		-.0350	.0923	-.0114	-.2112		
.020		-.3015		.0000	-.1202	-.0945	-.1522	-.2946	-.6376	
.040			-.3769	-.1990						
.041	-.1533									
.050					-.2988	-.3188	-.7771	-.4697		
.069									-.6316	
.090					-.4537					
.091				-.3112						
.096			-.2790							
.094		-.2779								
.113	-.1223									
.150					-.6570	-.6477	-.6403	-.5419		
.157									-.5940	
.163			.0000							
.177				-.4274						
.229		-.2420								
.246			-.2363							
.247	-.1840									
.250					-.6951	-.7164	-.6218	-.5130		
.274				-.4783						
.345									-.432	
.362		-.0103								
.390			-.3812							
.400					-.6839	-.6472		-.4185		
.402				-.5855						
.418										-.6619
.429	-.0902									
.497		-.2870								
.503									-.3991	
.547	-.1097									
.550					-.4797	-.5586				
.565				-.2935						
.600								-.3493		
.633	-.3962									
.637			-.2661							
.650							-.3966			
.670									-.2940	
.700		-.4373				-.4487				
.723										-.3582
.725					-.1883					
.727	-.4366									
.750							-.3776	-.3118		
.760				.1360						
.775					-.0412	-.3159				

AMES 11-073(OA148) -140A/B/C ORB LEFT WING TOP (XE8U73)

ALPHA (4) = 7.975 BETA (1) = -3.868

SECTION (1)LEFT WING T P SURF | DEPENDENT VARIABLE CP

2Y/BW	.2350	.2990	.3640	.4270	.5340	.6730	.7800	.8870	.9720	1.0000
X/CW										
.793	.1574									
.798			.1733							
.808				.3651						
.834		.2255								
.839			.4510							
.850					.2678	-.2919	-.3602			
.857				.4281						
.862									-.2501	
.865		.6845								
.879			.4335							
.900		.4043			.3354			-.2758		
.905				.3717						
.919			.3859							
.950					.3532	-.0833	-.3492			
.953				.2939						
.955			.3282							
.965		.3322								

ALPHA (4) = 7.984 BETA (2) = .174 MACH = 1.1000 Q = 599.94 P = 708.36 RN/L = 3.1794

SECTION (1)LEFT WING TOP SURF DEPENDENT VARIABLE CP

2Y/BW	.2350	.2990	.3640	.4270	.5340	.6730	.7800	.8870	.9720	1.0000
X/CW										
.000	-.0947	-.4601	-.6987	.0559	.5005	.5059	.4797	.3802	-.4760	
.010		-.5274	-.6041		-.1509	-.0476	-.1521	-.3377		
.020		-.4301		.0000	-.2311	-.2123	-.2671	-.4021	-.7518	
.040			-.4805	-.2296						
.041	-.2170									
.050					-.3653	-.4032	-.4613	-.5637		
.059									-.7334	
.080					-.4911					
.081				-.3134						
.096			-.3649							
.094		-.3621								
.113	-.2194									
.150					-.6505	-.6814	-.6866	-.5861		
.157									-.7329	
.163			.0000							
.177				-.3804						
.229		-.2352								
.245			-.2783							
.247	-.2592									
.250					-.6707	-.7568	-.6529	-.5613		

AMES 11-073(OA148) -140A/B/C ORB LEFT WING TOP (XEB073)

ALPHA (4) = 7.984 BETA (2) = .174

SECTION (1)LEFT WING TOP SURF DEPENDENT VARIABLE CP

2Y/BW	.2650	.2990	.3540	.4270	.5340	.6730	.7800	.8870	.9720	1.0000
X/CW										
.274				-.4469						
.345									-.6237	
.362		.0105								
.390			-.4134							
.400					-.6602	-.7000		-.4386		
.402				-.5627						
.418										-.5265
.429	-.0718									
.497		-.3017								
.503									-.5414	
.547	-.1145									
.550					-.3329	-.5972				
.565				-.3708						
.600								-.3738		
.633	-.4047									
.637			-.2743							
.650							-.4427			
.670									-.3873	
.700		-.3795				-.4499				
.723										-.3714
.725					-.0270					
.727	-.4140									
.750							-.4360	-.3556		
.760				.1481						
.775					.1238	-.2376				
.795	.1398									
.798			.1443							
.803				.3528						
.834		.1398								
.849			.4630							
.850					.2668	-.1204	-.4296			
.857				.3167						
.862									-.3021	
.865		.5877								
.879			.3994							
.900		.3738			.3021			-.3144		
.905				.2673						
.919			.3320							
.950					.2847	.1667	-.3818			
.953				.1968						
.955			.2853							
.965		.3040								

AMES 11-073(OA148) -140A/B/C CRB LEFT WING TOP (XEBU73)

ALPHA (4) = 7.984 BETA (3) = 4.233 MACH = 1.1000 Q = 599.94 P = 708.36 RN/L = 3.1794

SECTION (1)LEFT WING TOP SURF DEPENDENT VARIABLE CP

2Y/BW	.2350	.2990	.3540	.4270	.5340	.6730	.7800	.8870	.9720	1.0000
X/CW										
.000	-.1596	-.6990	-.4698	-.0306	.3697	.3700	.3352	.2297	-.6755	
.010		-.6071	-.4220		-.2734	-.1865	-.3073	-.4843		
.020		-.5923		.0000	-.3469	-.3208	-.4056	-.5433	-.6448	
.040			-.3926	-.1608						
.041	-.28 9									
.050					-.4175	-.4872	-.5540	-.6620		
.069									-.5548	
.080					-.5076					
.081				-.1959						
.096			-.2773							
.094		-.6558								
.113	-.3118									
.150					-.5983	-.7144	-.7349	-.7246		
.157									-.5533	
.163			.0000							
.177				-.2920						
.223		-.1967								
.246			-.2584							
.247	-.3209									
.250					-.5918	-.7986	-.7141	-.7025		
.274				- 3982						
.345									-.5324	
.362		.0602								
.390			-.3329							
.400					-.5933	-.7599		-.6355		
.402				-.5217						
.418										-.5121
.429	.0088									
.497		-.2695								
.503									-.4873	
.547	-.0948									
.550					-.4139	-.6121				
.565				-.3063						
.600								-.4765		
.633	-.3886									
.637			-.1985							
.650							-.5972			
.670									-.4635	
.700		-.2960				-.4090				
.723										-.3649
.725					.0444					
.727	-.3797									
.750							-.5155	-.4218		
.760				.0155						
.775					.2682	-.0418				

AMES 11-073(OA148) -140A/B/C ORB LEFT WING TOP (XE8U73)

ALPHA (4) = 7.984 BETA (3) = 4.233

SECTION (1)LEFT WING TOP SURF DEPENDENT VARIABLE CP

2Y/BW	.2350	.2990	.3640	.4270	.5340	.6730	.7800	.8870	.9720	1.0000
X/CW										
.793	.1082									
.798			.0893							
.808				.2953						
.834		.0055								
.839			.3685							
.850					.2617	.0597	-.4247			
.857				.2031						
.862									-.4485	
.865		.4317								
.879			.2881							
.900		.2722			.1906			-.4080		
.905				.1787						
.919			.2338							
.950					.1495	.2512	-.2913			
.953				.1532						
.955			.2061							
.965		.2262								

ALPHA (5) = 12.057 BETA (1) = -3.848 MACH = 1.0997 Q = 599.84 P = 708.61 RN/L = 3.1785

SECTION (1)LEFT WING TOP SURF DEPENDENT VARIABLE CP

2Y/BW	.2350	.2990	.3640	.4270	.5340	.6730	.7800	.8870	.9720	1.0000
X/CW										
.000	-.0421	-.4556	-.5440	-.1525	.3714	.4035	.3693	.2528	-.6005	
.010		-.5139	-.5947		-.4448	-.3036	-.4051	-.5826		
.020		-.5008		.0000	-.5568	-.4658	-.5342	-.6389	-.5852	
.040			-.5056	-.6094						
.041	-.1454									
.050					-.6948	-.6430	-.6906	-.7637		
.069									-.5093	
.080					-.7930					
.081				-.6975						
.096			-.4115							
.094		-.3791								
.113	-.1269									
.150					-.8014	-.7245	-.7037	-.7420		
.157									-.4980	
.163			.0000							
.177				-.6056						
.229		-.3284								
.245			-.3835							
.247	-.1890									
.250					-.7864	-.7307	-.6999	-.6990		

AMES 11-073(OA148) -140A/B/C ORB LEFT WING TOP (XE8U73)

ALPHA (5) = 12.067 BETA (1) = -3.848

SECTION (1)LEFT WING TOP SURF DEPENDENT VARIABLE CP

2Y/BW	.2350	.2990	.3640	.4270	.5340	.6730	.7800	.8870	.9720	1.0000
X/CW										
.274				-.4528						
.345									-.4959	
.362		-.2369								
.390			-.4484							
.400					-.6927	-.6753		-.5356		
.402				-.5882						
.418										-.4852
.429	-.2622									
.497		-.3853								
.503									-.4856	
.547	-.1478									
.550					-.6593	-.6571				
.565				-.4005						
.600								-.5137		
.633	-.4475									
.637			-.3699							
.650							-.5712			
.670									-.4460	
.700		-.5370				-.6122				
.723										-.4030
.725					-.4083					
.727	-.4998									
.750							-.5426	-.5058		
.760				-.2030						
.775					-.3761	-.5671				
.793	.0709									
.798			-.2806							
.803				.0416						
.834		-.0754								
.839			.2183							
.850					-.2460	-.4899	-.4996			
.857				-.0312						
.862									-.3750	
.855		.3981								
.879			.2009							
.900		.3012			-.2143			-.4836		
.905				-.0424						
.919			.2404							
.950					-.1313	-.3910	-.4525			
.953				-.0136						
.955			.2542							
.955		.2719								

AMES 11-073(OA148) -140A/B/C ORB LEFT WING TOP (XE8U73)

ALPHA (5) = 12.077 BETA (2) = .180 MACH = 1.0997 Q = 599.84 P = 708.61 RN/L = 3.1785

SECTION (1)LEFT WING TOP SURF DEPENDENT VARIABLE CP

2Y/BW	.2350	.2990	.3640	.4270	.5340	.6730	.7800	.8870	.9720	1.0000
X/CW										
.000	-.1300	-.6346	-.6125	-.4052	.1900	.2378	.2144	.1006	-.6701	
.010		-.5481	-.6012		-.5963	-.4282	-.5212	-.6893		
.020		-.5242		.0000	-.6801	-.5856	-.6456	-.7413	-.5787	
.040			-.5789	-.3504						
.041	-.2363									
.050					-.7137	-.7208	-.7723	-.8405		
.069									-.5610	
.080					-.7139					
.081				-.3499						
.085			-.5363							
.094		-.6030								
.113	-.2594									
.150					-.6858	-.7859	-.7704	-.8178		
.157									-.5443	
.163			.0000							
.177				-.3492						
.229		-.6928								
.246			-.4000							
.247	-.2592									
.250					-.6903	-.7845	-.7580	-.6258		
.274				-.5335						
.345									-.5300	
.362		-.1809								
.390			-.5909							
.400					-.7167	-.7255		-.5788		
.402				-.6337						
.418										-.5265
.429	-.2463									
.497		-.3382								
.503									-.5231	
.547	-.0992									
.550					-.6020	-.6948				
.565				-.4810						
.600								-.5565		
.633	-.5034									
.637			-.5771							
.650							-.6408			
.670									-.4942	
.700		-.5109				-.6291				
.723										-.4530
.725					-.2461					
.727	-.5247									
.750							-.6050	-.5507		
.760				-.1505						
.775					-.1507	-.4675				

AMES 11-073(OA148) -140A/B/C ORB LEFT WING TOP (XEBU73)

ALPHA (5) = 12.077 BETA (2) = .180

SECTION (1)LEFT WING TOP SURF DEPENDENT VARIABLE CP

2Y/BW	.2350	.2990	.3640	.4270	.5340	.6730	.7800	.8870	.9720	1.0000
X/CW										
.793	-.0321									
.798			-.0518							
.808				.0684						
.834		-.0345								
.839			.3827							
.850					-.0409	-.4363	-.5527			
.857				-.0491						
.862									-.4274	
.865		.3064								
.879			.2787							
.900		.2897			-.0502			-.5378		
.905				-.0654						
.919			.2217							
.950					-.0167	-.2417	-.5114			
.953				-.0177						
.955			.2109							
.965		.2581								

ALPHA (5) = 12.076 BETA (3) = 4.245 MACH = 1.0997 Q = 599.84 P = 708.61 RN/L = 3.1785

SECTION (1)LEFT WING TOP SURF DEPENDENT VARIABLE CP

2Y/BW	.2350	.2990	.3640	.4270	.5340	.6730	.7800	.8870	.9720	1.0000
X/CW										
.000	-.2116	-.6784	-.6688	-.4839	.0784	.0881	.0506	-.0742	-.7163	
.010		-.6531	-.6601		-.6514	-.5484	-.5438	-.7921		
.020		-.6505		.0000	-.7182	-.6924	-.7411	-.8059	-.6626	
.040			-.6372	-.1582						
.041	-.3306									
.050					-.7423	-.7942	-.8509	-.7201		
.069									-.6407	
.080					-.7327					
.081				-.2545						
.096			-.5490							
.094		-.7176								
.113	-.3263									
.150					-.6830	-.8660	-.8509	-.7015		
.157									-.6169	
.163			.0000							
.177				-.4797						
.229		-.8553								
.246			-.4797							
.247	-.3793									
.250					-.6464	-.8499	-.8135	-.7167		

AMES 11-073(OA148) -140A/B/C ORB LEFT WING TOP (XEBU73)

ALPHA (5) = 12.076 BETA (3) = 4.245

SECTION (1)LEFT WING TOP SURF DEPENDENT VARIABLE CP

2Y/BW	.2350	.2990	.3640	.4270	.5340	.6730	.7800	.8970	.9720	1.0000
X/CW										
.274				-.4586						
.345									-.5835	
.362		-.0457								
.390			-.4544							
.400					-.6438	-.7802		-.6939		
.402				-.5807						
.418										-.5770
.429	-.2101									
.497		-.3196								
.503									-.5716	
.547	-.1138									
.550					-.5187	-.7373				
.565				-.6511						
.600								-.6736		
.633	-.4749									
.637			-.4716							
.650							-.7148			
.670									-.5520	
.700		-.4518				-.6376				
.723										-.5021
.725					-.1709					
.727	-.4837									
.750							-.6615	-.6357		
.760				-.1964						
.775					-.0362	-.3343				
.793	-.0254									
.798			-.1687							
.808				.1207						
.834		-.1368								
.839			.2836							
.850					-.0115	-.2452	-.6069			
.857				.0721						
.862									-.5048	
.865		.2184								
.879			.2542							
.900		.2003			-.1005			-.6026		
.905				.0041						
.919			.1824							
.950					-.1012	-.0108	-.5176			
.953				.0015						
.955			.1607							
.965		.1950								

AMES 11-073(OA148) -140A/B/C ORB LEFT WING TOP (XEBU74) (05 AUG 75)

REFERENCE DATA

SREF = 2690.0000 SQ.FT. XMRP = 1076.6800 IN. XO
LREF = 474.8000 IN. YMRP = .0000 IN. YO
BREF = 936.0000 IN. ZMRP = 375.0000 IN. ZO
SCALE = .0300

PARAMETRIC DATA

RUDDER = -5.000 SPDBRK = 55.000
BDFLAP = 16.300 L-ELVN = -10.000
R-ELVN = -10.000 MACH = .900

ALPHA (1) = -3.938 BETA (1) = -3.854 MACH = .90080 Q = 600.60 P = 1057.3 RN/L = 3.5738

SECTION (1)LEFT WING TOP SURF DEPENDENT VARIABLE CP

2Y/BW	.2350	.2990	.3640	.4270	.5340	.6730	.7800	.8970	.9720	1.0000
X/CW										
.000	-.4334	-.0365	-.0960	.1511	.4127	.3224	.2478	.2634	-1.0995	
.010		.0401	.0623		.6314	.5913	.5537	.4669		
.020		.0515		.0000	.5640	.5097	.4830	.4213	-.3663	
.040			.1737	.4051						
.041	-.0308									
.050					.3540	.3018	.2868	.2273		
.069									-.4233	
.080					.1649					
.081				.2650						
.086			.3019							
.094		.0652								
.113	.0524									
.150					-.0535	-.0916	-.0918	-.1399		
.157									-.4413	
.163			.0000							
.177				.0204						
.229		.1752								
.246			.0969							
.247	.0848									
.250					-.2307	-.2752	-.3246	-.4307		
.274				-.1208						
.345									-.0695	
.352		.1740								
.380			-.0906							
.400					-.1200	-.2132		-.3597		
.402				-.1182						
.418										-.5674
.429	.1748									
.497		-.0506								
.503									.0003	
.547	.0519									
.550					.0221	-.0289				
.555				.0924						
.630								.0690		
.633	-.0549									
.637			.1432							
.650							.1231			
.670									.1373	

AMES 11-073(OA148) -140A/B/C ORB LEFT WING TOP (XEBU74)

ALPHA (1) = -3.998 BETA (1) = -3.854

SECTION (1)LEFT WING TOP SURF DEPENDENT VARIABLE CP

2Y/BW	.2350	.2990	.3540	.4270	.5340	.6730	.7800	.8870	.9720	1.0000
X/CW										
.700		.1600				.1911				
.723										-1.2838
.725					.2354					
.727	.1205									
.750							.5523	.3726		
.760				.2291						
.775					.5765	.4345				
.793	.2998									
.798			.2135							
.808				.5259						
.834		.2008								
.839			.4951							
.850					.3542	.276[illegible]	.2944			
.857				.3437						
.862									.0680	
.865		.5217								
.879			.3357							
.900		.2875			.2271			.1974		
.905				.2302						
.919			.2154							
.950					.1301	.1908	.1651			
.953				.1251						
.955			.1287							
.965		.1597								

ALPHA (1) = -3.915 BETA (2) = .189 MACH = .90080 Q = 600.60 P = 1057.3 RN/L = 3.5738

SECTION (1)LEFT WING TOP SURF DEPENDENT VARIABLE CP

2Y/BW	.2350	.2990	.3540	.4270	.5340	.6730	.7800	.8870	.9720	1.0000
X/CW										
.000	-.4596	.0034	-.0177	.1736	.3569	.2374	.1523	.1542	-.7436	
.010		.0431	.0793		.5592	.5132	.4758	.3997		
.020		.0409		.0000	.4991	.4467	.4176	.3601	-.4202	
.040			.1602	.3425						
.041	-.0777									
.050					.3026	.2609	.2401	.1891		
.059									-.4629	
.080					.1287					
.081				.2367						
.086			.2604							
.094		.0404								
.114	.0943									
.150					-.0620	-.0926	-.0954	-.1580		

AMES 11-073(OA148) -140A/B/C ORB LEFT WING TOP (XEBU74)

ALPHA (1) = -3.915 BETA (2) = .189

SECTION (1)LEFT WING TOP SURF DEPENDENT VARIABLE CP

2Y/BW	.2350	.2996	.3640	.4270	.5340	.6730	.7800	.8870	.9720	1.0000
X/CW										
.157									-.4133	
.163			.0000							
.177				.0149						
.209		.1439								
.246			.0774							
.247	.0656									
.250					-.2269	-.2618	-.3147	-.4305		
.274				-.1168						
.349									-.0734	
.352		.1430								
.390			-.0913							
.400					-.1450	-.2347		-.3608		
.402				-.1339						
.416										-.6144
.429	.1477									
.497		-.0631								
.503									-.0254	
.547	.0329									
.550					-.0310	-.0714				
.555				.0364						
.620								.0491		
.633	-.0741									
.637			.0823							
.650							.1018			
.670									.1009	
.700		.1079				.1610				
.723										-1.3431
.725					.1945					
.727	.0760									
.750							.5275	.3612		
.760				.1769						
.775					.5556	.4063				
.793	.2420									
.798			.1634							
.809				.4896						
.834		.1430								
.839			.4555							
.850					.3253	.2440	.2826			
.857				.3053						
.862									.0349	
.865		.4863								
.879			.2927							
.900		.2392			.2002			.1817		
.905				.1969						
.919			.1748							

AMES 11-073(OA148) -140A/B/C ORB LEFT WING TOP (XEBU74)

ALPHA (1) = -3.915 BETA (2) = .189

SECTION (1)LEFT WING TOP SURF DEPENDENT VARIABLE CP

2Y/BW	.2350	.2990	.3640	.4270	.5340	.6730	.7800	.8870	.9720	1.0000
X/CW										
.950					.1090	.1698	.1535			
.953				.0949						
.955			.0923							
.965		.1179								

ALPHA (1) = -3.961 BETA (3) = 4.266 MACH = .90080 Q = 600.60 P = 1057.3 RN/L = 3.5738

SECTION (1)LEFT WING TOP SURF DEPENDENT VARIABLE CP

2Y/BW	.2350	.2990	.3640	.4270	.5340	.6730	.7800	.8870	.9720	1.0000
X/CW										
.000	-.4847	.0313	.0344	.1898	.3063	.1648	.0702	.0718	-.6373	
.010		.0476	.0967		.4993	.4344	.3962	.3259		
.020		.0348		.0030	.4350	.3750	.3520	.2899	-.4573	
.040			.1493	.2876						
.041	-.1009									
.050					.2576	.2117	.1913	.1461		
.069									-.5114	
.080					.1034					
.081				.2007						
.086			.2317							
.094		.0318								
.113	.0043									
.150					-.0750	-.1087	-.1109	-.1774		
.157									-.4670	
.163			.0000							
.177				.0073						
.229		.1311								
.246			.0539							
.247	.0599									
.250					-.2259	-.2605	-.3106	-.4477		
.274				-.1165						
.345									-.1020	
.362		.1275								
.390			-.0958							
.400					-.1719	-.2591		-.3883		
.402				-.1515						
.418										-.5236
.429	.1329									
.497		-.0740								
.503									-.0438	
.547	.0261									
.550					-.1008	-.1236				
.565				-.0227						

AMES 11-073(OA148) -140A/B/C ORB LEFT WING TOP (XEBU74)

ALPHA (1) = -3.951 BETA (3) = 4.266

SECTION (1)LEFT WING TOP SURF DEPENDENT VARIABLE CP

2Y/BW	.2350	.2990	.3640	.4270	.5340	.6730	.7800	.8870	.9720	1.0000
X/CW										
.600								.0335		
.633	-.0843									
.637			.027'							
.650							.0769			
.670									.0709	
.700		.0495				.1271				
.723										-1.2815
.725					.1510					
.727	.0175									
.750							.4972	.3516		
.760				.1340						
.775					.5243	.3769				
.793	.1792									
.798			.1194							
.803				.4559						
.834		.0813								
.839			.4159							
.850					.2934	.2086	.2682			
.857				.2715						
.862									-.0011	
.865		.4487								
.873			.2538							
.900		.1927			.17'6			.1639		
.905				.1608						
.919			.1397							
.950					.0863	.1468	.1404			
.953				.0702						
.955			.0663							
.965		.0892								

ALPHA (2) = .055 BETA (1) = -3.868 MACH = .90127 Q = 600.67 P = 1056.4 RN/L = 3.5726

SECTION (1)LEFT WING TOP SURF DEPENDENT VARIABLE CP

2Y/BW	.2350	.2990	.3640	.4270	.5340	.6730	.7800	.8870	.9720	1.0000
X/CW										
.000	-.3679	.0531	.1102	.3809	.5528	.4835	.4507	.4571	-.3510	
.010		.0525	.1570		.4693	.4776	.4322	.2899		
.020		.0338		.0000	.3484	.3169	.2846	.2232	-.23:2	
.040			.1338	.2110						
.041	-.1342									
.050					.0833	.0320	.0000	-.0391		
.069									-.3472	
.080					-.1363					

AMES 11-073(OA148) -140A/B/C CRB LEFT WING TOP (XEBJ74)

ALPHA (2) = .055 BETA (1) = -3.868

SECTION (1)LEFT WING TOP SURF DEPENDENT VARIABLE CP

2Y/BW	.2350	.2990	.3640	.4270	.5340	.6730	.7800	.8870	.9720	1.0000
X/CW										
.081				.0503						
.096			.2280							
.094		.0170								
.113	-.0262									
.150					-.3559	-.3899	-.4063	-.4204		
.157									-.6610	
.163			.0000							
.177				-.2304						
.229		.1115								
.245			-.0817							
.247	.0350									
.250					-.4794	-.5984	-.6415	-.6539		
.274				-.3571						
.245									-.1352	
.292		.0450								
.320			-.2794							
.400					-.2243	-.3273		-.5871		
.402				-.2646						
.418										-.0630
.429	.1026									
.497		-.2310								
.503									-.1255	
.547	-.0948									
.550					-.0035	-.0344				
.565				.0509						
.600								.0735		
.633	-.2277									
.637			.1049							
.650							.1354			
.670									.0404	
.700		.1084				.1882				
.723										-.5681
.725					.2336					
.727	.0680									
.750							.5155	.3229		
.760				.2295						
.775					.5074	.4035				
.793	.2611									
.798			.2227							
.808				.4917						
.824		.2044								
.839			.4714							
.850					.3455	.2798	.2694			
.857				.3404						
.852									.0229	

AMES 11-073(OA148) -140A/B/C ORB LEFT WING TOP (XEBUT4)

ALPHA (2) = .085 BETA (1) = -3.868

SECTION (1)LEFT WING TOP SURF DEPENDENT VARIABLE CP

2Y/BW	.2350	.2990	.3540	.4270	.5340	.6730	.7800	.8870	.9720	1.0000
X/CW										
.865		.4773								
.879			.3428							
.900		.2987			.2232			.1600		
.905				.2320						
.919			.2203							
.950					.1167	.1824	.1395			
.953				.1219						
.955			.1292							
.965		.1672								

ALPHA (2) = .084 BETA (2) = .180 MACH = .90127 Q = 600.67 P = 1056.4 RN/L = 3.5726

SECTION (1)LEFT WING TOP SURF DEPENDENT VARIABLE CP

2Y/BW	.2350	.2990	.3540	.4270	.5340	.6730	.7800	.8870	.9720	1.0000
X/CW										
.000	-.3959	.0212	.0998	.3538	.5046	.4221	.3768	.3707	-.3650	
.010		.0041	.1232		.3849	.3940	.3476	.2167		
.020		-.0075		.0000	.2749	.2359	.2054	.1478	-.3258	
.040			.1628	.1527						
.041	-.2098									
.050					.0317	-.0231	-.0459	-.0879		
.059									-.4059	
.080					-..627					
.081				.0184						
.086			.1870							
.094		-.0082								
.113	-.0321									
.140					-.3552	-.3962	-.4171	-.4324		
.157									-.6892	
.163			.0000							
.177				-.2254						
.229		.0929								
.246			-.0962							
.247	.0180									
.250					-.4794	-.5904	-.6381	-.6726		
.274				-.3315						
.345									-.1074	
.392		.0307								
.393			-.2715							
.400					-.2478	-.3654		-.6250		
.409				-.2852						
.418										-.0826
.423	.0855									

AMES 11-073(OA148) -140A/B/C ORB LEFT WING TOP (XEB074)

ALPHA (2) = .084 BETA (2) = .180

SECTION (1)LEFT WING TOP SURF DEPENDENT VARIABLE CP

Z/CW	.2350	.2990	.3640	.4270	.5740	.6730	.7830	.8870	.9720	1.0000
X/CW										
.497		-.2278								
.503									-.0948	
.547	-.1080									
.550					-.0710	-.0831				
.585				-.0065						
.600								.0569		
.633	-.2400									
.637			.0418							
.650							.1089			
.670									.0407	
.700		.0578				.1590				
.725										-.6495
.735					.1917					
.737	.0181									
.750							.5061	.3217		
.760				.1838						
.775					.4833	.3757				
.793	.2028									
.798			.1727							
.808				.4582						
.834		.1494								
.839			.4217							
.850					.3183	.2543	.2639			
.857				.3073						
.862									.0027	
.865		.4183								
.879			.2941							
.900		.2503			.1960			.1519		
.905				.2009						
.919			.1844							
.950					.0995	.1624	.1341			
.953				.0927						
.955			.0998							
.965		.1291								

AMES 11-073(OA149) -140A/B/C O/B LEFT WING TOP (XEB074)

ALPHA (2) = .035 BETA (3) = 4.248 MACH = .90127 Q = 600.67 P = 1056.4 RN/L = 3.5726

SECTION (1)LEFT WING TOP SURF DEPENDENT VARIABLE CP

2Y/BW	.2350	.2900	.3040	.4270	.5340	.6730	.7800	.8870	.9720	1.0000
X/CW										
.000	-.4325	-.0317	.0713	.3175	.4504	.3058	.3231	.3061	-.3301	
.010		-.0391	.1004		.3008	.2130	.2577	.1291		
.020		-.0377		.0000	.2005	.1601	.1286	.0662	-.3857	
.040			.1317	.1049						
.041	-.2320									
.050					-.0133	-.0746	-.0988	-.1497		
.059									-.4625	
.080					-.1987					
.081				-.0055						
.086			.1576							
.094		-.0182								
.113	-.0326									
.150					-.3459	-.3938	-.4189	-.4621		
.157									-.7153	
.163			.0000							
.177				-.2119						
.229		.0824								
.236			-.0994							
.247	.0179									
.250					-.4598	-.5738	-.6277	-.6809		
.274				-.2788						
.345									-.0824	
.352		.0235								
.330			-.2478							
.400					-.2706	-.3533		-.7091		
.402				-.2987						
.418										-.0982
.429	.0750									
.497		-.2171								
.503									-.0700	
.547	-.1035									
.550					-.1506	-.1486				
.565				-.0740						
.500								.0571		
.635	-.2182									
.637			-.0225							
.650							.0896			
.670									.0333	
.700		.0072				.1313				
.723										-.6393
.725					.1451					
.727	-.0244									
.750							.4695	.3168		
.760				.1428						
.775					.4613	.3397				

AMES 11-073(OA148) -140A/B/C ORB LEFT WING TOP (XE8U74)

ALPHA (2) = .055 BETA (3) = 4.248

SECTION (1)LEFT WING TOP SURF DEPENDENT VARIABLE CP

2Y/BW	.2350	.2990	.3640	.4270	.5340	.6730	.7800	.8870	.9720	1.0000
X/CW										
.793	.1417									
.798			.1233							
.808				.4216						
.834		.0969								
.839			.3735							
.850					.2930	.2250	.2615			
.857				.2686						
.862									-.0159	
.865		.3695								
.879			.2550							
.900		.2006			.1699			.1483		
.905				.1684						
.919			.1469							
.950					.0830	.1475	.1329			
.953				.0676						
.955			.0678							
.965		.0898								

ALPHA (3) = 4.001 BETA (1) = -3.875 MACH = .90140 Q = 601.01 P = 1056.6 RN/L = 3.5771

SECTION (1)LEFT WING TOP SURF DEPENDENT VARIABLE CP

2Y/BW	.2350	.2990	.3640	.4270	.5340	.6730	.7800	.8870	.9720	1.0000
X/CW										
.000	-.2680	-.0304	.0616	.4151	.6180	.5767	.5536	.4978	-.1831	
.010		-.0823	.0784		.1814	.2138	.1163	-.1230		
.020		-.0970		.0000	.0394	-.0059	-.0767	-.1958	-.5214	
.040			.1088	-.0325						
.041	-.1659									
.050					-.2380	-.3210	-.3839	-.4655		
.069									-.6221	
.080					-.4657					
.081				-.2135						
.086			.1069							
.094		-.0524								
.113	-.0940									
.150					-.7029	-.7293	-.7271	-.7280		
.157									-.7710	
.163			.0000							
.177				-.4551						
.229		.0567								
.246			-.2606							
.247	-.0053									
.250					-.7579	-.9169	-.9441	-.7190		

TABULATED PRESSURE DATA - OA148 (AMES 11-073-1)

AMES 11-073(OA148) -140A/B/C ORB LEFT WING TOP (XEBU74)

ALPHA (3) = 4.001 BETA (1) = -3.875

SECTION (1)LEFT WING TOP SURF DEPENDENT VARIABLE CP

2Y/BW	.2350	.2990	.3640	.4270	.5340	.6730	.7800	.8870	.9720	1.0000
X/CW										
.274				-.5845						
.345									-.3172	
.362		-.0605								
.390			-.5288							
.400					-.3860	-.6951		-.4874		
.402				-.6120						
.419										-.5968
.429	.0504									
.497		-.4205								
.503									-.3286	
.547	-.2124									
.550					-.0427	-.0868				
.565				.0001						
.600								-.2904		
.633	-.4806									
.637			.0433							
.650							-.1821			
.670									-.1998	
.700		.0214				.1011				
.723										-.4144
.725					.1895					
.727	-.0248									
.750							.0512	-.1164		
.760				.2288						
.775					.3527	.2938				
.793	.2559									
.798			.2222							
.809				.3988						
.834		.2023								
.839			.4220							
.850					.2823	.2157	.1666			
.857				.3172						
.862									-.0938	
.865		.4874								
.879			.3268							
.900		.2901			.1905			-.0386		
.905				.2214						
.919			.2130							
.950					.0925	.1565	.1363			
.953				.1071						
.955			.1248							
.965		.1699								

AMES 11-073(OA148) -140A/B/C CRB LEFT WING TOP (XEBU74)

ALPHA (3) = 4.079 BETA (2) = .183 MACH = .90140 Q = 601.01 P = 1056.6 RN/L = 3.5771

SECTION (1)LEFT WING TOP SURF DEPENDENT VARIABLE CP

2Y/BW	.2350	.2990	.3640	.4270	.5340	.6730	.7800	.8870	.9720	1.0000
X/CW										
.000	-.3555	-.1446	-.0550	.3156	.5265	.4847	.4573	.3878	-.3118	
.010		-.1885	-.0182		.0609	.0990	.0032	-.2276		
.020		-.1581		.0000	-.0581	-.1052	-.1746	-.3013	-.6258	
.040			.0455	-.1022						
.041	-.4163									
.060					-.3039	-.3896	-.4577	-.5466		
.069									-.6926	
.080					-.5017					
.081				-.2609						
.086			.0569							
.094		-.0793								
.113	-.1085									
.150					-.7060	-.7535	-.7594	-.7686		
.157									-.7708	
.163			.0000							
.177				-.4818						
.229		.0346								
.246			-.2806							
.247	-.0206									
.250					-.7423	-.8916	-.9690	-.7591		
.274				-.5826						
.345									-.2964	
.362		-.0779								
.390			-.5270							
.400					-.3904	-.7866		-.5031		
.402				-.6102						
.418										-.6384
.429	.0263									
.497		-.4205								
.503									-.2895	
.547	-.2329									
.550					-.0742	-.0754				
.565				-.0495						
.600								-.2678		
.633	-.4920									
.637			-.0170							
.650							-.1270			
.670									-.1523	
.700		-.0223				.1012				
.723										-.4629
.725					.1540					
.727	-.0543									
.750							.1905	-.0980		
.760				.1822						
.775					.3251	.2447				

AMES 11-073(OA148) -140A/B/C ORB LEFT WING TOP (XE&U74)

ALPHA (3) = 4.079 BETA (2) = .183

SECTION (1)LEFT WING TOP SURF DEPENDENT VARIABLE CP

2Y/BW	.2350	.2990	.3640	.4270	.5340	.6730	.7800	.8870	.9720	1.0000
X/CW										
.793	.2051									
.798			.1645							
.808				.3334						
.834		.1258								
.833			.3925							
.850					.2749	.1716	.2264			
.857				.2743						
.862									-.0740	
.865		.4515								
.879			.2830							
.900		.2359			.1779			.0073		
.905				.1810						
.919			.1818							
.950					.0775	.1245	.1505			
.953				.0762						
.955			.0951							
.965		.1301								

ALPHA (3) = 4.001 BETA (3) = 4.242 MACH = .90140 Q = 601.01 P = 1056.6 RN/L = 3.5771

SECTION (1)LEFT WING TOP SURF DEPENDENT VARIABLE CP

2Y/BW	.2350	.2990	.3640	.4270	.5340	.6730	.7800	.8870	.9720	1.0000
X/CW										
.000	-.4105	-.2703	-.1548	.1927	.4349	.3914	.3538	.2661	-.5103	
.010		-.2567	-.0643		-.0567	-.0263	-.1381	-.3603		
.020		-.1947		.0000	-.1550	-.2130	-.2951	-.4484	-.7662	
.040			.0140	-.1532						
.041	-.4948									
.050					-.3674	-.4654	-.5382	-.6369		
.060									-.7783	
.080					-.5406					
.081				-.2793						
.086			.0296							
.094		-.0952								
.113	-.1005									
.150					-.7086	-.7793	-.7873	-.8152		
.157									-.7946	
.163			.0000							
.177				-.4707						
.229		.0051								
.246			-.2612							
.247	-.0286									
.250					-.7136	-.8219	-.9713	-.7974		

AMES 11-073(OA148) -140A/B/C ORB LEFT WING TOP (XEBU74)

ALPHA (3) = 4.001 BETA (3) = 4.242

SECTION (1)LEFT WING TOP SURF DEPENDENT VARIABLE CP

2Y/BW	.2350	.2990	.3640	.4270	.5340	.6730	.7900	.8870	.9720	1.0000
X/CW										
.274				-.5542						
.345									-.2755	
.362		-.0775								
.390			-.4958							
.400					-.4097	-.6459		-.5219		
.402				-.5341						
.419										-.6934
.428	.0228									
.497		-.4127								
.503									-.2344	
.547	-.2246									
.550					-.1283	-.1040				
.555				-.1269						
.600								-.2690		
.623	-.4512									
.637			-.0800							
.650							-.0404			
.670									-.1011	
.700		-.0396				.0748				
.723										-.5321
.725					.1175					
.727	-.0867									
.750							.3367	-.0255		
.760				.1210						
.775					.2422	.1622				
.793	.1299									
.798			.0972							
.806				.3382						
.834		.0705								
.839			.3884							
.850					.2356	.1867	.2207			
.857				.2333						
.862									-.0511	
.865		.4288								
.879			.2446							
.900		.1976			.1567			.0499		
.905				.1470						
.919			.1448							
.950					.0603	.1271	.1323			
[illegible]				.0494						
.955			.0735							
.955		.1031								

AMES 11-073(OA148) -140A/B/C ORB LEFT WING TOP (XE8U74)

ALPHA (4) = 7.933 BETA (1) = -3.872 MACH = .90130 Q = 600.85 P = 1056.6 RN/L = 3.5771

SECTION (1)LEFT WING TOP SURF DEPENDENT VARIABLE CP

2Y/BW	.2350	.2990	.3640	.4270	.5340	.6730	.7800	.8870	.9720	1.0000
X/CW										
.000	-.2604	-.2860	-.2703	.2191	.4933	.4690	.4294	.2994	-.5644	
.010		-.3612	-.2020		-.2625	-.1804	-.3157	-.5674		
.020		-.3062		.0000	-.3663	-.3927	-.4835	-.6803	-1.0191	
.040			-.0927	-.3752						
.041	-.2158									
.050					-.5891	-.6420	-.7435	-.8759		
.069									-1.0032	
.080					-.7692					
.081				-.5331						
.085			-.0695							
.094		-.1463								
.113	-.1641									
.150					-.9810	-1.0426	-.9047	-.8222		
.157									-.7262	
.163			.0000							
.177				-.6620						
.229		-.0054								
.246			-.4227							
.247	-.0754									
.250					-1.0036	-1.0136	-.7849	-.5922		
.274				-.7580						
.345									-.3698	
.362		-.1565								
.390			-.6535							
.400					-.7128	-.6989		-.4843		
.402				-.8915						
.418										-.6794
.429	.0062									
.497		-.5268								
.503									-.3411	
.547	-.3260									
.550					-.3106	-.5430				
.565				-.1898						
.600								-.3780		
.633	-.6737									
.637			-.0223							
.650							-.4724			
.670									-.3142	
.700		-.0723				-.4027				
.723										-.4681
.725					.0451					
.727	-.0682									
.750							-.4137	-.3386		
.760				.1957						
.775					.2447	-.1742				

AMES 11-073(OA148) -140A/B/C ORB LEFT WING TOP (XE8U74)

ALPHA (4) = 7.933 BETA (1) = -3.872

SECTION (1)LEFT WING TOP SURF DEPENDENT VARIABLE CP

2Y/BW	.2350	.2990	.3640	.4270	.5340	.6730	.7800	.8870	.9720	1.0000
X/CW										
.793	.2493									
.798			.1473							
.808				.3820						
.834		.1592								
.839			.3681							
.850					.2942	-.0523	-.3533			
.857				.2710						
.862									-.2686	
.865		.5690								
.879			.2432							
.900		.2790			.2186			-.3046		
.905				.1791						
.919			.1463							
.950					.1316	.0834	-.2892			
.953				.0808						
.955			.0838							
.965		.1571								

ALPHA (4) = 8.028 BETA (2) = .177 MACH = .90130 Q = 600.85 P = 1056.6 RN/L = 3.5771

SECTION (1)LEFT WING TOP SURF DEPENDENT VARIABLE CP

2Y/BW	.2350	.2990	.3640	.4270	.5340	.6730	.7800	.8870	.9720	1.0000
X/CW										
.000	-.3538	-.4800	-.4037	.0381	.3557	.3318	.2892	.1602	-.8330	
.010		-.4050	-.2055		-.4027	-.3182	-.4649	-.7051		
.020		-.3567		.0030	-.4789	-.5142	-.5988	-.7874	-1.1045	
.040			-.0793	-.4329						
.041	-.4132									
.050					-.6577	-.7300	-.8304	-.9664		
.069									-1.0988	
.080					-.8161					
.081				-.5742						
.086			-.0678							
.094		-.1922								
.113	-.1933									
.150					-.9549	-1.0689	-.9682	-.8303		
.157									-.6873	
.163			.0000							
.177				-.6551						
.223		-.1103								
.245			-.4172							
.247	-.0715									
.250					-.9764	-1.0642	-.8598	-.6358		

AMES 11-073(OA148) -140A/B/C ORB LEFT WING TOP (XEBU74)

ALPHA (4) = 8.028 BETA (2) = .177

SECTION (1)LEFT WING TOP SURF DEPENDENT VARIABLE CP

2Y/BW	.2350	.2990	.3640	.4270	.5340	.6730	.7800	.8870	.9720	1.0000
X/CW										
.274				-.7323						
.345									-.4148	
.362		-.1808								
.390			-.6528							
.400					-.6366	-.7692		-.5371		
.402				-.8529						
.419										-.5694
.429	-.0041									
.497		-.5646								
.503									-.3958	
.547	-.3484									
.550					-.3063	-.5631				
.565				-.1478						
.600								-.4372		
.633	-.6934									
.637			-.0921							
.650							-.5003			
.670									-.3396	
.700		-.0675				-.3049				
.723										-.4681
.725					.0695					
.727	-.1339									
.750							-.4312	-.3941		
.760				.1322						
.775					.3000	.0242				
.793	.1537									
.798			.0648							
.808				.3390						
.834		.0808								
.839			.3452							
.850					.2530	.0591	-.3434			
.857				.2017						
.862									-.3054	
.885		.4588								
.879			.2317							
.900		.2283			.1586			-.3538		
.905				.1127						
.919			.1436							
.950					.0785	.0881	-.2469			
.953				.0094						
.955			.0845							
.965		.1293								

AMES 11-073(OA148) -140A/B/C ORB LEFT WING TOP (XEBU74)

ALPHA (4) = 6.031 BETA (3) = 4.235 MACH = .90130 Q = 600.85 P = 1056.6 RN/L = 3.5771

SECTION (1)LEFT WING TOP SURF DEPENDENT VARIABLE CP

2Y/BW	.2350	.2990	.3640	.4270	.5340	.6730	.7800	.8870	.9720	1.0000
X/CW										
.000	-.4345	-.5924	-.2434	-.1316	.1982	.1790	.1263	-.0164	-1.0754	
.010		-.3923	-.1749		-.5381	-.4803	-.6443	-.8806		
.020		-.3396		.0000	-.6060	-.6388	-.7473	-.9468	-1.1266	
.040			-.1452	-.3991						
.041	-.5217									
.050					-.7045	-.8267	-.9377	-.9853		
.059									-1.0962	
.060					-.8301					
.081				-.4760						
.086			-.1609							
.094		-.3256								
.113	-.2056									
.150					-.9075	-1.1024	-1.0469	-.8075		
.157									-.9322	
.163			.0000							
.177				-.5943						
.229		-.2226								
.246			-.5232							
.247	-.0870									
.250					-.9056	-1.0884	-.9296	-.6972		
.274				-.6951						
.345									-.5666	
.352		-.1048								
.390			-.6925							
.400					-.6791	-.8082		-.5987		
.402				-.8165						
.418										-.5225
.449	-.0206									
.497		-.5380								
.503									-.4883	
.507	-.3510									
.550					-.2901	-.5252				
.565				-.1912						
.600								-.5025		
.633	-.5579									
.637			-.1529							
.650							-.5025			
.670									-.3798	
.700		-.1502				-.1787				
.723										-.4843
.725					.1213					
.727	-.1875									
.750							-.4007	-.4264		
.760				-.0171						
.775					.3958	.0794				

AMES 11-073(OA148) -140A/B/C ORB LEFT WING TOP (XEBU74)

ALPHA (4) = 8.031 BETA (3) = 4.235

SECTION (1)LEFT WING TOP SURF DEPENDENT VARIABLE CP

2Y/BW	.2350	.2990	.3640	.4270	.5340	.6730	.7800	.8870	.9720	1.0000
X/CW										
.793	.0782									
.799			.0670							
.808				.2357						
.834		.0345								
.839			.3463							
.853					.2032	.0836	-.2545			
.857				.1269						
.862									-.2986	
.865		.3713								
.879			.2263							
.900		.2016			.0986			-.3548		
.905				.0694						
.919			.1393							
.950					.0196	.1095	-.1465			
.953				.0149						
.955			.0782							
.965		.1048								

ALPHA (5) = 11.980 BETA (1) = -3.859 MACH = .90157 Q = 601.36 P = 1056.9 RN/L = 3.5829

SECTION (1)LEFT WING TOP SURF DEPENDENT VARIABLE CP

2Y/BW	.2350	.2990	.3640	.4270	.5340	.6730	.7800	.8870	.9720	1.0000
X/CW										
.000	-.2793	-.6793	-.5499	-.1664	.2345	.2180	.1690	.0156	-.7059	
.010		-.6792	-.2582		-.6958	-.5995	-.7559	-.8656		
.020		-.5960		.0000	-.8237	-.7852	-.9035	-.7208	-.6485	
.040			-.1825	-.6479						
.041	-.2726									
.050					-.9550	-.9942	-1.0193	-.7300		
.069									-.5192	
.090					-1.0481					
.081				-.7390						
.086			-.1778							
.094		-.3561								
.113	-.2632									
.150					-1.1644	-.9638	-.9549	-.6829		
.157									-.4945	
.153			.0000							
.177				-.7888						
.203		-.2289								
.246			-.5529							
.247	-.1111									
.250					-1.0356	-.8930	-.8111	-.6459		

AMES 11-073(DA148) -140A/B/C ORB LEFT WING TOP (XEBU74)

ALPHA (5) = 11.980 BETA (1) = -3.859

SECTION (1)LEFT WING TOP SURF DEPENDENT VARIABLE CP

2Y/BW	.2350	.2990	.3640	.4270	.5340	.6730	.7800	.8870	.9720	1.0000
X/CW										
.274				-.8422						
.345									-.4705	
.362		-.3753								
.380			-.7629							
.400					-.8013	-.7757		-.5916		
.402				-.8394						
.419										-.4471
.429	-.3286									
.497		-.7587								
.503									-.4456	
.547	-.4792									
.550					-.6793	-.6772				
.565				-.4660						
.600								-.5192		
.623	-.8184									
.637			-.2955							
.650							-.6068			
.670									-.4257	
.700		-.1981				-.5767				
.723										-.4259
.725					-.3256					
.727	-.2125									
.750							-.5707	-.5058		
.750				-.0864						
.775					-.2027	-.4803				
.774	.1075									
.788			-.1237							
.808				.1176						
.824		-.0351								
.833			.1631							
.850					-.1001	-.4671	-.5304			
.857				.0274						
.862									-.4131	
.865		.3996								
.879			.0859							
.900		.2356			-.0534			-.4783		
.905				-.0479						
.919			.0731							
.950					-.0480	-.3569	-.4969			
.953				-.1071						
.955			.0726							
.965		.1758								

AMES 11-073(OA148) -140A/B/C ORB LEFT WI (O) (XEB074)

ALPHA (5) = 12.020 BETA (2) = .183 MACH = .90157 Q = 601.35 P = 1055.9 RN/L = 3 5629

SECTION (1)LEFT WING TOP SURF DEPENDENT VARIABLE CP

2Y/BW	.2350	.2990	.3640	.4270	.5340	.6730	.7800	.8870	.9720	1.0000
X/CW										
.000	-.3966	-.7759	-.3350	-.3611	.0558	.0459	-.0076	-.1581	-.7206	
.010		-.5339	-.2808		-.8481	-.7439	-.8966	-.9002		
.020		-.4990		.0000	-.9553	-.9279	-1.0409	-.7019	-.6428	
.040			-.2595	-.8311						
.041	-.4528									
.050					-1.0563	-1.1068	-1.0712	-.6727		
.059									-.5788	
.080					-1.1019					
.081				-.6120						
.096			-.2534							
.099		-.4920								
.113	-.2752									
.154					-1.2055	-1.0154	-1.0085	-.6748		
.157									-.5575	
.163			.0000							
.177				-.7215						
.229		-.5774								
.246			-.5704							
.247	-.1714									
.250					-.9902	-.9213	-.8912	-.6777		
.274				-.8265						
.345									-.5167	
.362		-.2810								
.390			-.7690							
.400					-.7820	-.8200		-.6350		
.402				-.9429						
.418										-.4738
.429	-.0576									
.497		-.7235								
.503									-.4857	
.547	-.4852									
.550					-.6522	-.7071				
.565				-.3485						
.602								-.5856		
.633	-.8310									
.637			-.3148							
.650							-.6381			
.670									-.4641	
.700		-.2271				-.5864				
.723										-.4667
.745					-.2391					
.727	-.2545									
.750							-.6033	-.5623		
.760				-.1288						
.775					-.0530	-.4253				

AMES 11-073(OA148) -14OA/B/C ORB LEFT WING TOP (XEBU74)

ALPHA (5) = 12.020 BETA (2) = .183

SECTION (1)LEFT WING TOP SURF DEPENDENT VARIABLE CP

2Y/EW	.2350	.2990	.3640	.4270	.5340	.6730	.7800	.8870	.9720	1.0000
X/CW										
.793	.0660									
.798			-.1151							
.803				.0420						
.834		-.0590								
.839			.2022							
.852					-.0412	-.4177	-.5441			
.857				-.0678						
.862									-.4558	
.885		.2809								
.879			.1221							
.902		.2111			-.0629			-.5249		
.905				-.1318						
.919			.0781							
.950					-.0637	-.2826	-.4956			
.953				-.1713						
.965			.0892							
.965		.1398								

ALPHA (5) = 12.054 BETA (3) = 4.256 MACH = .00157 Q = 601.36 P = 1056.9 RN/L = 3.5829

SECTION (1)LEFT WING TOP SURF DEPENDENT VARIABLE CP

2Y/EW	.2350	.2990	.3640	.4270	.5340	.6730	.7800	.8870	.9720	1.0000
X/CW										
.000	-.4951	-.7313	-.3572	-.5181	-.1143	-.1349	-.1999	-.3501	-.7127	
.010		-.6350	-.3290		-.9811	-.9018	-1.0503	-.9502		
.020		-.6512		.0000	-1.0733	-1.0671	-1.1077	-.7655	-.6472	
.040			-.3212	-.4439						
.041	-.6050									
.050					-1.1277	-1.2017	-1.0095	-.7051		
.061									-.6040	
.080					-1.1022					
.081				-.5472						
.085			-.2968							
.094		-.6194								
.113	-.2412									
.150					-1.0700	-1.2001	-.8628	-.6676		
.157									-.5840	
.163			.0000							
.177				-.5600						
.209		-.6614								
.245			-.5371							
.247	-.2393									
.250					-.9426	-1.0112	-.8277	-.6593		

AMES 11-073(OA148) -140A/B/C ORB LEFT WING TOP (XEB074)

ALPHA (5) = 12.054 BETA (3) = 4.256

SECTION (1)LEFT WING TOP SURF DEPENDENT VARIABLE CP

2Y/BW	.0330	.2990	.3640	.4270	.5340	.6730	.7800	.8870	.9720	1.0000
X/CW										
.274				-.7999						
.345									-.5593	
.362		-.2896								
.390			-.7996							
.400					-.6560	-.8203		-.6650		
.402				-.9579						
.418										-.5420
.429	-.0915									
.467		-.7114								
.503									-.5244	
.547	-.4652									
.550					-.5206	-.6961				
.565				-.3582						
.600								-.6254		
.633	-.8338									
.637			-.2767							
.650							-.6802			
.670									-.5035	
.700		-.2137				-.5583				
.723										-.4974
.725					-.1484					
.727	-.2613									
.750							-.6396	-.6142		
.760				-.1945						
.775					.0003	-.4168				
.793	.0535									
.798			-.1051							
.808				.0073						
.834		-.0655								
.839			.2140							
.850					-.1018	-.3543	-.5629			
.857				-.0902						
.862									-.5147	
.865		.2316								
.879			.1359							
.900		.1685			-.1607			-.5644		
.905				-.1050						
.919			.0895							
.950					-.1720	-.2481	-.4787			
.953				-.1333						
.955			.0514							
.965		.0974								

AMES 11-073(OA148) -140A/B/C ORB LEFT WING TOP (XE6U75) (05 AUG 75)

REFERENCE DATA

SREF = 2600.0000 SQ.FT. XMRP = 1076.6800 IN. XO
LREF = 474.8600 IN. YMRP = .0000 IN. YO
BREF = 936.0600 IN. ZMRP = 375.0000 IN. ZO
SCALE = .0300

PARAMETRIC DATA

RUDDER = -5.000 SPDBRK = 55.000
BDFLAP = 16.300 L-ELVN = -10.000
R-ELVN = -10.000 MACH = .600

ALPHA (1) = -3.999 BETA (1) = -7.854 MACH = .59648 Q = 594.32 P = 2386.4 RN/L = 4.8576

SECTION (1)LEFT WING TOP SURF DEPENDENT VARIABLE CP

2Y/BW	.2350	.2990	.3640	.4270	.5340	.6730	.7800	.8870	.9720	1.0000
X/CW										
.000	-.1566	-.1622	-.3312	-.1628	.0703	-.0172	-.0754	-.0093	-1.2676	
.010		-.0147	-.0715		.6080	.5972	.5755	.5371		
.020		.0243		.0000	.5691	.5633	.5389	.5025	-.1904	
.040			.0914	.3775						
.041	.0301									
.050					.3617	.3639	.3479	.3200		
.063									-.1370	
.080					.1798					
.081				.2591						
.086			.2590							
.094		.0585								
.113	.0462									
.150					-.0301	-.0298	-.0266	-.0383		
.157									-.1219	
.163			.0000							
.177				.0137						
.229		.1531								
.246			.0660							
.247	.0770									
.250					-.1662	-.1852	-.2134	-.2377		
.274				-.0963						
.345									-.0572	
.362		.1247								
.390			-.0615							
.400					-.0874	-.1305		-.1800		
.402				-.0770						
.418										-1.0665
.429	.1268									
.497		-.0381								
.503									-.0461	
.547	.0268									
.550					.0312	-.0080				
.565				.0816						
.600								.0136		
.633	-.0213									
.637			.1278							
.660							.0806			
.670									.0651	

AMES 11-073(OA148) -140A/B/C ORB LEFT WING TOP (XEBU75)

ALPHA (1) = -3.999 BETA (1) = -7.854

SECTION (1)LEFT WING TOP SURF DEPENDENT VARIABLE CP

2Y/BW	.2350	.2990	.3640	.4270	.5340	.6730	.7800	.8870	.9720	1.0000
X/CW										
.700		.1443				.1298				
.723										-2.0751
.725					.1828					
.727	.1125									
.750							.4342	.2663		
.760				.1668						
.775					.5040	.3569				
.793	.2701									
.799			.1742							
.808				.4224						
.834		.1777								
.839			.4071							
.850					.2711	.2303	.2118			
.857				.2664						
.862									-.0015	
.865		.4516								
.879			.2605							
.900		.2290			.1648			.1344		
.905				.1681						
.919			.1565							
.950					.0965	.1583	.1296			
.953				.0894						
.955			.0837							
.965		.1200								

ALPHA (1) = -3.939 BETA (2) = -3.848 MACH = .59648 Q = 594.32 P = 2386.4 RN/L = 4.8576

SECTION (1)LEFT WING TOP SURF DEPENDENT VARIABLE CP

2Y/BW	.2350	.2990	.3640	.4270	.5340	.6730	.7800	.8870	.9720	1.0000
X/CW										
.000	-.1600	-.1036	-.2196	-.1001	.0455	-.0814	-.1455	-.0831	-1.1497	
.010		-.0113	-.0385		.5461	.5241	.5036	.4640		
.020		.0095		.0000	.5075	.4966	.4763	.4333	-.2696	
.040			.0812	.3238						
.041	-.0174									
.050					.3090	.3103	.3034	.2670		
.069									-.2055	
.080					.1429					
.081				.2122						
.086			.2253							
.094		.0240								
.113	.0093									
.150					-.0567	-.0548	-.0485	-.0602		

AMES 11-073(OA148) -140A/B/C ORB LEFT WING TOP (XE8U75)

ALPHA (1) = -3.939 BETA (2) = -3.848

SECTION (1)LEFT WING TOP SURF DEPENDENT VARIABLE CP

2Y/BW	.2350	.2990	.3640	.4270	.5340	.6730	.7800	.8870	.9720	1.0000
X/CW										
.157									-.1718	
.163			.0000							
.177				-.0098						
.229		.1260								
.246			.0442							
.247	.0495									
.250					-.1815	-.1995	-.2219	-.2442		
.274				-.1131						
.345									-.0741	
.362		.0990								
.390			-.0847							
.400					-.1142	-.1500		-.1871		
.402				-.1044						
.418										-.9940
.429	.1044									
.497		-.0636								
.503									-.0634	
.547	.0050									
.550					-.0068	-.0334				
.565				.0439						
.600								.0061		
.633	-.0535									
.637			.0912							
.650							.0544			
.670									.0429	
.700		.1035				.1092				
.723										-2.1827
.725					.1555					
.727	.0735									
.750							.4276	.2623		
.760				.1411						
.775					.4815	.3302				
.793	.2365									
.798			.1448							
.808				.4017						
.834		.1385								
.839			.3809							
.850					.2511	.2044	.2086			
.867				.2439						
.892									-.0116	
.905		.4247								
.879			.2406							
.900		.1991			.1466			.1328		
.905				.1474						
.919			.1278							

AMES 11-073(OA148) -140A/B/C ORB LEFT WING TOP (XE8U75)

ALPHA (1) = -3.939 BETA (2) = -3.848

SECTION (1)LEFT WING TOP SURF DEPENDENT VARIABLE CP

2Y/BW	.2350	.2990	.3640	.4270	.5340	.6730	.7800	.8870	.9720	1.0000
X/CW										
.950					.0751	.1436	.1227			
.953				.0713						
.955			.0647							
.965		.0991								

ALPHA (1) = -3.938 BETA (3) = .187 MACH = .59648 Q = 594.32 P = 2386.4 RN/L = 4.8576

SECTION (1)LEFT WING TOP SURF DEPENDENT VARIABLE CP

2Y/BW	.2350	.2990	.3640	.4270	.5340	.6730	.7800	.8870	.9720	1.0000
X/CW										
.000	-.1607	-.0555	-.1205	-.0360	.0354	-.1323	-.2152	-.1706	-1.1100	
.010		-.0036	-.0088		.4812	.4496	.4237	.3993		
.020		-.0029		.0000	.4434	.4294	.4105	.3755	-.3298	
.040			.0790	.2750						
.041	-.0553									
.050					.2716	.2632	.2580	.2372		
.069									-.2600	
.080					.1095					
.081				.1824						
.086			.1917							
.094		.0011								
.113	-.0176									
.150					-.0726	-.0659	-.0558	-.0720		
.157									-.2058	
.163			.0000							
.177				-.0156						
.229		.1001								
.246			.0195							
.247	.0272									
.250					-.1948	-.2060	-.2249	-.2438		
.274				-.1235						
.345									-.1013	
.362		.0819								
.390			-.0972							
.400					-.1323	-.1697		-.1923		
.402				-.1225						
.418										-.9123
.429	.0836									
.497		-.0861								
.503									-.0746	
.547	-.0143									
.550					-.0311	-.0512				
.565				.0122						

AMES 11-073(OA148) -140A/B/C ORB LEFT WING TOP (XE8U75)

ALPHA (1) = -3.938 BETA (3) = .187

SECTION (1)LEFT WING TOP SURF DEPENDENT VARIABLE CP

2Y/BW	.2350	.2990	.3640	.4270	.5340	.6730	.7800	.8870	.9720	1.0000
X/CW										
.600								-.0016		
.633	-.0749									
.637			.0517							
.650							.0525			
.670									.0217	
.700		.0675				.0911				
.723										-2.1623
.725					.1350					
.727	.0393									
.750							.4178	.2556		
.760				.1175						
.775					.4644	.3097				
.793	.1977									
.798			.1177							
.808				.3815						
.834		.1096								
.839			.3530							
.850					.2326	.1788	.1994			
.857				.2204						
.862									-.0211	
.865		.4038								
.879			.2119							
.900		.1687			.1264			.1266		
.905				.1254						
.919			.1073							
.950					.0628	.1255	.1196			
.953				.0545						
.955			.0500							
.965		.0729								

ALPHA (1) = -3.926 BETA (4) = 4.266 MACH = .59648 Q = 594.32 P = 2386.4 RN/L = 4.8576

SECTION (1)LEFT WING TOP SURF DEPENDENT VARIABLE CP

2Y/BW	.2350	.2990	.3640	.4270	.5340	.6730	.7800	.8870	.9720	1.0000
X/CW										
.000	-.1629	-.0302	-.0577	.0255	.0539	-.1362	-.2436	-.2215	-.9738	
.010		-.0113	.0179		.4147	.3797	.3532	.3201		
.020		-.0165		.0000	.3792	.3522	.3353	.3003	-.3546	
.040			.0742	.2280						
.041	-.0909									
.050					.2130	.2002	.1932	.1755		
.069									-.3005	
.080					.0654					

AMES 11-073(OA148) -140A/B/C ORB LEFT WING TOP (XE8U75)

ALPHA (1) = -3.926 BETA (4) = 4.266

SECTION (1)LEFT WING TOP SURF DEPENDENT VARIABLE CP

2Y/BW	.2350	.2990	.3640	.4270	.5340	.6730	.7800	.8870	.9720	1.0000
X/CW										
.081				.1487						
.086			.1673							
.094		-.0174								
.113	-.0460									
.150					-.0983	-.1060	-.0958	-.1114		
.157									-.2416	
.163			.0000							
.177				-.0338						
.229		.0814								
.246			.0018							
.247	.0110									
.250					-.2131	-.2250	-.2450	-.2694		
.274				-.1432						
.345									-.1208	
.362		.0682								
.390			-.1161							
.400					-.1609	-.1868		-.2048		
.402				-.1533						
.416										-.7563
.429	.0674									
.497		-.1016								
.503									-.0905	
.547	-.0333									
.550					-.0671	-.0754				
.555				-.0239						
.600								-.0152		
.633	-.1064									
.637			.0132							
.650							.0325			
.670									-.0099	
.700		.0277				.0684				
.723										-1.9255
.725					.1110					
.727	-.0033									
.750							.3999	.2375		
.760				.0930						
.775					.4389	.2858				
.793	.1651									
.798			.0863							
.808				.3609						
.834		.0734								
.839			.3331							
.850					.2152	.1500	.1875			
.857				.1989						
.862									-.0323	

AMES 11-073(OA148) -140A/B/C ORE LEFT WING TOP (XEBU75)

ALPHA (1) = -3.926 BETA (4) = 4.266

SECTION (1)LEFT WING TOP SURF DEPENDENT VARIABLE CP

2Y/BW	.2350	.2990	.3640	.4270	.5340	.6730	.7800	.8870	.9720	1.0000
X/CW										
.865		.3862								
.879			.1971							
.900		.1438			.1078			.1146		
.905				.1085						
.919			.0920							
.950					.0515	.1095	.1054			
.953				.0440						
.955			.0333							
.965		.0582								

ALPHA (1) = -3.941 BETA (5) = 8.332 MACH = .59648 Q = 594.32 P = 2386.4 RN/L = 4.8576

SECTION (1)LEFT WING TOP SURF DEPENDENT VARIABLE CP

2Y/BW	.2350	.2990	.3640	.4270	.5340	.6730	.7800	.8870	.9720	1.0000
X/CW										
.000	-.1755	-.0286	.0053	.0907	.0975	-.1068	-.2463	-.2415	-.8391	
.010		-.0192	.0392		.3472	.3099	.2850	.2587		
.020		-.0260		.0000	.3138	.2655	.2735	.2345	-.3855	
.040			.0794	.1779						
.041	-.1187									
.050					.1595	.1477	.1422	.1325		
.069									-.3272	
.080					.0304					
.081				.1059						
.086			.1453							
.094		-.0296								
.113	-.0621									
.150					-.1156	-.1160	-.1109	-.1268		
.157									-.2599	
.163			.0000							
.177				-.0556						
.229		.0697								
.246			-.0212							
.247	.0027									
.250					-.2242	-.2334	-.2425	-.2608		
.274				-.1560						
.345									-.1279	
.352		.0453								
.390			-.1321							
.400					-.1806	-.1906		-.2029		
.402				-.1755						
.418										-.6324
.429	.0548									

AMES 11-073(OA148) -140A/B/C ORB LEFT WING TOP (XE8U75)

ALPHA (1) = -3.941 BETA (5) = 8.332

SECTION (1)LEFT WING TOP SURF DEPENDENT VARIABLE CP

2Y/BW	.2350	.2990	.3640	.4270	.5340	.6730	.7800	.8670	.9720	1.0000
X/CW										
.497		-.1243								
.503									-.0910	
.547	-.0541									
.550					-.0860	-.0855				
.565				-.0509						
.600								-.0153		
.633	-.1319									
.637			-.0213							
.650							.0272			
.670									-.0161	
.700		-.0069				.0649				
.725										-1.6741
.725					.0951					
.727	-.0387									
.750							.3931	.2321		
.760				.0758						
.775					.4306	.2779				
.793	.1345									
.795			.0676							
.808				.3432						
.834		.0536								
.839			.3175							
.850					.2077	.1394	.1858			
.857				.1901						
.852									-.0329	
.865		.3618								
.879			.1758							
.900		.1267			.1081			.1165		
.905				.1031						
.919			.0777							
.950					.0470	.1035	.1107			
.953				.0392						
.955			.0294							
.965		.0555								

AMES 11-073(OA148) -140A/B/C ORB LEFT WING TOP (XEBU75)

ALPHA (2) = .043 BETA (1) = -7.890 MACH = .59624 Q = 593.85 P = 2386.3 RN/L = 4.8579

SECTION (1)LEFT WING TOP SURF DEPENDENT VARIABLE CP

2Y/BW	.2350	.2990	.3640	.4270	.5340	.6730	.7800	.8870	.9720	1.0000
X/CW										
.000	-.0745	.0334	.0404	.2621	.4451	.4013	.3710	.4218	-.3223	
.010		.0675	.1253		.4836	.5222	.4903	.3653		
.020		.0566		.0000	.3620	.3633	.3357	.2999	-.0450	
.040			.1751	.2009						
.041	-.0100									
.050					.0865	.0697	.0504	.0337		
.069									-.1261	
.080					-.1183					
.081				.0317						
.086			.2116							
.094		.0185								
.113	.0070									
.150					-.2737	-.3058	-.3211	-.2860		
.157									-.1962	
.163			.0000							
.177				-.1919						
.229		.0914								
.246			-.1024							
.247	.0403									
.250					-.3490	-.3861	-.4300	-.4525		
.274				-.2489						
.345									-.1630	
.362		.0055								
.390			-.1891							
.400					-.1746	-.2341		-.2838		
.402				-.1665						
.418										-.1883
.429	.0620									
.497		-.1548								
.503									-.1630	
.547	-.0769									
.550					-.0103	-.0574				
.565				.0496						
.630								-.0252		
.633	-.1029									
.637			.0963							
.650							.0551			
.670									.0204	
.700		.1056				.1153				
.723										-.7397
.725					.1739					
.727	.0710									
.750							.4096	.2361		
.760				.1752						
.775					.4599	.3474				

AMES 11-073(OA148) -140A/B/C ORB LEFT WING TOP (XEBU75)

ALPHA (2) = .043 BETA (1) = -7.890

SECTION (1)LEFT WING TOP SURF DEPENDENT VARIABLE CP

2Y/BW	.2350	.2990	.3640	.4270	.5340	.6730	.7800	.8870	.9720	1.0000
X/CW										
.793	.2453									
.798			.1763							
.808				.4092						
.834		.1774								
.839			.3996							
.850					.2647	.2315	.1979			
.857				.2620						
.862									.0138	
.865		.4324								
.879			.2634							
.900		.2406			.1639			.1289		
.905				.1716						
.919			.1560							
.950					.0981	.1602	.1260			
.953				.0932						
.955			.0951							
.965		.1302								

ALPHA (2) = .091 BETA (2) = -3.863 MACH = .59624 Q = 593.85 P = 2386.3 RN/L = 4.8579

SECTION (1)LEFT WING TOP SURF DEPENDENT VARIABLE CP

2Y/BW	.2350	.2990	.3640	.4270	.5340	.6730	.7800	.8870	.9720	1.0000
X/CW										
.000	-.1027	.0215	.0553	.2680	.4260	.3711	.3327	.3636	-.3141	
.010		.0305	.1098		.4042	.4402	.4054	.2830		
.020		.0137		.0000	.2895	.2858	.2595	.2305	-.1090	
.040			.1403	.1352						
.041	-.0634									
.050					.0345	.0065	-.0030	-.0162		
.069									-.1763	
.080					-.1496					
.081				-.0101						
.086			.1699							
.094		-.0132								
.113	-.0308									
.150					-.2980	-.3238	-.3344	-.3068		
.157									-.2158	
.163			.0000							
.177				-.2156						
.229		.0512								
.245			-.1243							
.247	.0020									
.250					-.3635	-.4024	-.4344	-.4569		

AMES 11-073(OA148) -140A/B/C ORB LEFT WING TOP (XEBU75)

ALPHA (2) = .091 BETA (2) = -3.863

SECTION (1)LEFT WING TOP SURF DEPENDENT VARIABLE CP

2Y/BW	.2350	.2990	.3640	.4270	.5340	.6730	.7800	.8870	.9720	1.0000
X/CW										
.274				-.2666						
.345									-.1600	
.362		-.0225								
.390			-.2143							
.400					-.2031	-.2551		-.2929		
.402				-.2017						
.419										-.1742
.429	.0319									
.497		-.1867								
.503									-.1461	
.547	-.1060									
.550					-.0434	-.0831				
.555				.0073						
.600								-.0239		
.633	-.1461									
.637			.0519							
.650							.0400			
.570									.0193	
.700		.0598				.0932				
.723										-.7669
.725					.1398					
.727	.0307									
.750							.4036	.2345		
.760				.1420						
.775					.4443	.3182				
.793	.2049									
.798			.1429							
.808				.3827						
.834		.1416								
.839			.3584							
.850					.2399	.2074	.1893			
.857				.2382						
.862									.0087	
.865		.3900								
.879			.2407							
.880		.2056			.1444			.1228		
.905				.1463						
.919			.1355							
.950					.0809	.1436	.1164			
.953				.0741						
.955			.0693							
.965		.1059								

AMES 11-073(OA148) -140A/B/C ORB LEFT WING TOP (XEBU75)

ALPHA (2) = .092 BETA (3) = .181 MACH = .59624 Q = 593.85 P = 2386.3 RN/L = 4.8579

SECTION (1)LEFT WING TOP SURF DEPENDENT VARIABLE CP

2Y/BW	.2350	.2990	.3640	.4270	.5340	.6730	.7800	.8870	.9720	1.0000
X/CW										
.000	-.1375	-.0095	.0532	.2635	.3972	.3323	.2785	.3038	-.3085	
.010		-.0152	.0736		.3239	.3502	.3269	.2208		
.020		-.0313		.3000	.2192	.2139	.1977	.1633	-.1570	
.040			.1049	.3850						
.041	-.1037									
.050					-.0141	-.0267	-.0454	-.0556		
.069									-.2133	
.080					-.1787					
.081				-.0427						
.085			.1259							
.094		-.0436								
.113	-.0588									
.150					-.3096	-.3275	-.3240	-.3117		
.157									-.2303	
.163			.0000							
.177				-.2213						
.229		.0440								
.246			-.1423							
.247	-.0190									
.250					-.3707	-.4046	-.4283	-.4447		
.274				-.2784						
.345									-.1476	
.362		-.0348								
.390			-.2369							
.400					-.2272	-.2628		-.2879		
.402				-.2250						
.418										-.1773
.429	.0159									
.497		-.2025								
.503									-.1223	
.547	-.1280									
.550					-.0774	-.0999				
.585				-.0293						
.600								-.0265		
.633	-.1639									
.637			.0127							
.650							.0293			
.670									.0188	
.700		.0272				.0798				
.723										-.7910
.725					.1199					
.727	-.0075									
.750							.3983	.3345		
.760				.1146						
.775					.4255	.2967				

AMES 11-073(OA148) -140A/B/C ORB LEFT WING TOP (XEBU75)

ALPHA (2) = .092 BETA (3) = .181

SECTION (1)LEFT WING TOP SURF DEPENDENT VARIABLE CP

2Y/BW	.2350	.2990	.3640	.4270	.5340	.6730	.7800	.8970	.9720	1.0000
X/CW										
.793	.1637									
.799			.1134							
.803				.3588						
.834		.1012								
.839			.3338							
.853					.2226	.1843	.1869			
.857				.2133						
.862									.0113	
.866		.3505								
.879			.2065							
.880		.1693			.1277			.1241		
.906				.1231						
.910			.1084							
.940					.0660	.1298	.1164			
.953				.0750						
.965			.0516							
.965		.0780								

ALPHA (2) = .077 BETA (4) = 4.247 MACH = .59524 Q = 593.85 P = 2386.3 RN/L = 4.8579

SECTION (1)LEFT WING TOP SURF DEPENDENT VARIABLE CP

2Y/BW	.2350	.2990	.3640	.4270	.5340	.6730	.7800	.8970	.9720	1.0000
X/CW										
.000	-.1716	-.0514	.0249	.2384	.3707	.3077	.2644	.2718	-.2561	
.010		-.0604	.0481		.2406	.2792	.2350	.1317		
.020		-.0672		.0000	.1409	.1333	.1089	.0655	-.2012	
.040			.0749	.0322						
.041	-.1404									
.050					-.0659	-.0841	-.1044	-.1247		
.059									-.2398	
.080					-.2137					
.081				-.0760						
.086			.0957							
.094		-.0582								
.113	-.0906									
.150					-.3271	-.3448	-.3501	-.3388		
.157									-.2495	
.163			.0000							
.177				-.2334						
.229		.0274								
.248			-.1550							
.247	-.0309									
.266					-.3811	-.4119	-.4358	-.4555		

AMES 11-073(OA148) -140A/B/C ORB LEFT WING TOP (XE8U75)

ALPHA (2) = .077 BETA (4) = 4.247

SECTION (1)LEFT WING TOP SURF DEPENDENT VARIABLE CP

Z/BW	.2350	.2930	.3640	.4270	.5340	.6730	.7800	.8870	.9720	1.0000
X/CW										
.274				-.2842						
.345									-.1433	
.362		-.0488								
.390			-.2347							
.400					-.2481	-.2829		-.2850		
.402				-.2473						
.418										-.1453
.429	.0005									
.497		-.2153								
.533									-.1121	
.547	-.1366									
.550					-.1044	-.1147				
.585				-.0666						
.600								-.0301		
.633	-.1942									
.637			-.0242							
.650							.0126			
.670									.0197	
.700		-.0114				.0621				
.723										-.6894
.725					.0989					
.727	-.0413									
.750							.3847	.2284		
.760				.0664						
.775					.4064	.2768				
.793	.1279									
.798			.0886							
.808				.3313						
.824		.0712								
.840			.3069							
.850					.2055	.1575	.1834			
.857				.1960						
.862									.0168	
.865		.3179								
.879			.1873							
.900		.1376			.1094			.1247		
.905				.1061						
.919			.0901							
.950					.0504	.1169	.1180			
.953				.0445						
.955			.0360							
.965		.0554								

AMES 11-073(OA148) -140A/B/C ORB LEFT WING TOP (XE8U75)

ALPHA (2) = .073 BETA (5) = 8.305 MACH = .59624 Q = 593.85 P = 2386.3 RN/L = 4.8579

SECTION : 1:LEFT WING TOP SURF DEPENDENT VARIABLE CP

2Y/BW	.2350	.2930	.3640	.4270	.5340	.6730	.7800	.8870	.9720	1.0000
X/CW										
.000	-.2164	-.1347	-.0330	.1939	.3410	.2707	.2336	.2206	-.2352	
.010		-.1229	.0016		.1472	.1888	.1509	.0480		
.020		-.1120		.0000	.0550	.0562	.0403	-.0062	-.2321	
.040			.0404	-.0228						
.041	-.1718									
.060					-.1106	-.1301	-.1439	-.1740		
.069									-.2645	
.080					-.2461					
.081				-.1125						
.086			.0582							
.094		-.0718								
.113	-.1107									
.150					-.3340	-.3521	-.3578	-.3421		
.157									-.2479	
.163			.0000							
.177				-.2404						
.229		.0143								
.246			-.1613							
.247	-.0434									
.250					-.3869	-.4085	-.4318	-.4394		
.274				-.2948						
.345									-.1336	
.362		-.0588								
.330			-.2415							
.400					-.2600	-.2859		-.2780		
.402				-.2619						
.419										-.1395
.429	-.0070									
.497		-.2268								
.503									-.0871	
.547	-.1522									
.550					-.1237	-.1242				
.585				-.0903						
.600								-.0203		
.633	-.2157									
.637			-.0562							
.650							.0121			
.670									.0214	
.700		-.0465				.0501				
.723										-.5847
.725					.0850					
.727	-.0734									
.750							.3785	.2343		
.760				.0795						
.770					.3911	.2590				

AMES 11-073(OA148) -140A/B/C ORB LEFT WING TOP (XE8U75)

ALPHA (2) = .073 BETA (5) = 8.305

SECTION (1)LEFT WING TOP SURF DEPENDENT VARIABLE CP

2Y/BW	.2350	.2990	.3640	.4270	.5340	.6730	.7800	.8870	.9720	1.0000
X/CW										
.793	.0997									
.798			.0653							
.808				.2908						
.834		.0432								
.839			.2780							
.850					.1971	.1440	.1864			
.857				.1761						
.862									.0268	
.865		.2954								
.879			.1638							
.900		.1153			.0992			.1310		
.905				.0962						
.919			.0745							
.950					.0479	.1091	.1216			
.953				.0370						
.955			.0212							
.965		.0437								

ALPHA (3) = 4.023 BETA (1) = -7.904 MACH = .59640 Q = 594.21 P = 2386.5 RN/L = 4.8659

SECTION (1)LEFT WING TOP SURF DEPENDENT VARIABLE CP

2Y/BW	.2350	.2990	.3640	.4270	.5340	.6730	.7800	.8870	.9720	1.0000
X/CW										
.000	-.0431	.0497	.1002	.3968	.6024	.5918	.5736	.5400	-.0287	
.010		.0055	.1063		.1393	.1912	.1008	-.1342		
.020		-.0172		.0000	-.0105	-.0460	-.1002	-.1992	-.3068	
.040			.1080	-.0775						
.041	-.0469									
.050					-.3028	-.3670	-.4137	-.4293		
.060									-.3984	
.090					-.4966					
.081				-.2575						
.086			.0779							
.094		-.0470								
.113	-.0320									
.150					-.5571	-.6343	-.6668	-.6006		
.157									-.4991	
.163			.0000							
.177				-.4239						
.223		.0235								
.245			-.2892							
.247	-.0042									
.250					-.5268	-.6073	-.6582	-.6992		

AMES 11-073(OA148) -140A/B/C ORB LEFT WING TOP (XE8U75)

ALPHA (3) = 4.023 BETA (1) = -7.904

SECTION (1)LEFT WING TOP SURF DEPENDENT VARIABLE CP

2Y/BW	.2350	.2990	.3640	.4270	.5340	.6730	.7800	.8870	.9720	1.0000
X/CW										
.274				-.4058						
.345									-.4001	
.362		-.1205								
.390			-.3128							
.400					-.2543	-.3207		-.3835		
.402				-.2483						
.418										-.1692
.429	-.0084									
.497		-.2676								
.503									-.3618	
.547	-.1877									
.550					-.0303	-.0892				
.555				.0262						
.600								-.0670		
.633	-.1893									
.637			.0739							
.650							.0378			
.670									-.0710	
.700		.0738				.1125				
.723										-.1673
.725					.1725					
.727	.0332									
.750							.3931	.2147		
.760				.1888						
.775					.4045	.3384				
.793	.2502									
.798			.1905							
.808				.3655						
.834		.1878								
.839			.3755							
.850					.2588	.2429	.1954			
.857				.2700						
.862									.0152	
.865		.4287								
.879			.2732							
.900		.2551			.1712			.1374		
.905				.1818						
.919			.1761							
.950					.1104	.1820	.1471			
.953				.1075						
.955			.1087							
.965		.1508								

AMES 11-073(OA148) -140A/B/C ORB LEFT WING TOP (XE8U75)

ALPHA (3) = 4.026 BETA (2) = -3.864 MACH = .59640 Q = 594.21 P = 2386.5 RN/L = 4.8659

SECTION (1)LEFT WING TOP SURF DEPENDENT VARIABLE CP

2Y/BW	.2350	.2990	.3640	.4270	.5340	.6730	.7800	.8870	.9720	1.0000
X/CW										
.000	-.1036	-.0330	.0167	.3181	.5291	.5110	.4901	.4464	-.1110	
.010		-.0822	.0285		.0274	.0735	-.0111	-.2368		
.020		-.0933		.0000	-.1068	-.1535	-.2134	-.3108	-.3806	
.040			.0399	-.1544						
.041	-.1102									
.050					-.3649	-.4384	-.4853	-.4940		
.059									-.4529	
.060					-.5296					
.081				-.3051						
.086			.0235							
.094		-.0881								
.113	-.0782									
.150					-.5821	-.6578	-.6691	-.6108		
.157									-.5072	
.163			.0000							
.177				-.4439						
.229		-.0108								
.246			-.3136							
.247	-.0322									
.250					-.5401	-.6213	-.6698	-.6919		
.274				-.4215						
.345									-.3761	
.362		-.1463								
.390			-.3382							
.400					-.2886	-.3408		-.3831		
.402				-.2745						
.418										-.2633
.449	-.0414									
.497		-.3019								
.503									-.3265	
.547	-.2295									
.550					-.0725	-.1137				
.565				-.0163						
.600								-.0633		
.633	-.2319									
.637			.0257							
.650							.0264			
.670									-.0515	
.700		.0188				.0929				
.723										-.1703
.725					.1432					
.727	-.0131									
.750							.3920	.2192		
.760				.1532						
.775					.3764	.3082				

AMES 11-073(OA148) -140A/B/C ORB LEFT WING TOP (XE8U75)

ALPHA (3) = 4.026 BETA (2) = -3.864

SECTION (1)LEFT WING TOP SURF DEPENDENT VARIABLE CP

2Y/BW	.2350	.2990	.3640	.4270	.5340	.6730	.7800	.8870	.9720	1.0000
X/CW										
.793	.2053									
.799			.1573							
.808				.3355						
.834		.1467								
.833			.3387							
.850					.2360	.2187	.1921			
.857				.2408						
.862									.0243	
.865		.3922								
.879			.2380							
.900		.2131			.1528			.1410		
.905				.1577						
.919			.1460							
.940					.0890	.1680	.1406			
.953				.0858						
.955			.0863							
.965		.1142								

ALPHA (3) = 4.153 BETA (3) = .177 MACH = .59640 Q = 594.21 P = 2386.5 RN/L = 4.8659

SECTION (1)LEFT WING TOP SURF DEPENDENT VARIABLE CP

2Y/BW	.2350	.2990	.3640	.4270	.5340	.6730	.7800	.8870	.9720	1.0000
X/CW										
.000	-.1705	-.1455	-.0934	.2255	.4418	.4249	.4039	.3516	-.1910	
.010		-.1792	-.0685		-.0831	-.0283	-.1226	-.3142		
.020		-.1658		.0000	-.2028	-.2377	-.3063	-.3844	-.4263	
.040			-.0201	-.2225						
.041	-.1583									
.050					-.4207	-.4830	-.5139	-.5244		
.069									-.4671	
.080					-.5618					
.081				-.3415						
.086			-.0217							
.094		-.1193								
.113	-.1131									
.150					-.5813	-.6450	-.6774	-.6063		
.157									-.4841	
.153			.0000							
.177				-.4542						
.229		-.0308								
.245			-.3316							
.247	-.0520									
.250					-.5483	-.6218	-.6631	-.6820		

AMES 11-073(OA148) -140A/B/C ORB LEFT WING TOP (XEBU75)

ALPHA (3) = 4.153 BETA (3) = .177

SECTION (1)LEFT WING TOP SURF DEPENDENT VARIABLE CP

2Y/BW	.2350	.2990	.3640	.4270	.5340	.6730	.7800	.8870	.9720	1.0000
X/CW										
.274				-.4333						
.345									-.3342	
.382		-.1599								
.390			-.3478							
.400					-.3022	-.3589		-.3814		
.402				-.3056						
.418										-.3472
.429	-.0549									
.497		-.3232								
.503									-.2820	
.507	-.2501									
.550					-.1025	-.1313				
.555				-.0499						
.600								-.0562		
.623	-.2617									
.637			-.0145							
.650							.0174			
.670									-.0268	
.700		-.0211				.0714				
.723										-.1568
.725					.1168					
.727	-.0499									
.750							.3866	.2215		
.760				.1280						
.775					.3523	.2741				
.793	.1695									
.798			.1173							
.808				.2935						
.834		.1023								
.839			.3002							
.850					.2146	.1936	.1900			
.857				.2148						
.882									.0360	
.865		.3543								
.879			.2110							
.900		.1823			.1307			.1339		
.905				.1302						
.919			.1218							
.950					.0732	.1474	.1355			
.953				.0655						
.955			.0665							
.965		.0974								

AMES 11-073(OA148) -140A/B/C ORB LEFT WING TOP (XE8U75)

ALPHA (3) = 4.012 BETA (4) = 4.240 MACH = .59640 Q = 594.21 P = 2386.5 RN/L = 4.8659

SECTION (1)LEFT WING TOP SURF DEPENDENT VARIABLE CP

2Y/BW	.2350	.2990	.3640	.4270	.5340	.6730	.7800	.8070	.9720	1.0000
X/CW										
.000	-.2354	-.2640	-.2101	.1128	.3505	.3294	.3017	.2316	-.3233	
.010		-.2678	-.1356		-.1774	-.1291	-.2402	-.4419		
.020		-.2234		.0000	-.2737	-.3149	-.3904	-.4950	-.5132	
.040			-.0710	-.2598						
.041	-.1982									
.050					-.4618	-.5264	-.5778	-.5862		
.069									-.5206	
.080					-.5714					
.081				-.3602						
.086			-.0572							
.094		-.1350								
.113	-.1419									
.150					-.5809	-.6525	-.6778	-.6166		
.157									-.4896	
.163			.0000							
.177				-.4472						
.229		-.0466								
.245			-.3243							
.247	-.0801									
.250					-.5516	-.6087	-.6529	-.6666		
.274				-.4315						
.345									-.3124	
.362		-.1643								
.390			-.3435							
.400					-.3158	-.3650		-.3724		
.402				-.3146						
.418										-.5245
.429	-.0740									
.497		-.3340								
.503									-.2482	
.547	-.2592									
.560					-.1227	-.1440				
.565				-.0908						
.600								-.0535		
.633	-.2778									
.637			-.0804							
.650							.0071			
.670									-.0060	
.700		-.0527				.0551				
.723										-.1549
.725					.0936					
.727	-.0706									
.750							.3815	.2293		
.760				.3241						
.775					.2879	.2426				

AMES 11-073(OA148) -140A/B/C ORB LEFT WING TOP (XEBU75)

ALPHA (3) = 4.012 BETA (4) = 4.240

SECTION (1)LEFT WING TOP SURF DEPENDENT VARIABLE CP

2Y/BW	.2350	.2990	.3640	.4270	.5340	.6730	.7800	.8870	.9720	1.0000
X/CW										
.793	.1271									
.798			.0716							
.808				.2351						
.834		.0574								
.839			.2975							
.850					.1952	.1696	.1848			
.857				.1701						
.862									.0473	
.865		.3609								
.879			.1839							
.900		.1363			.1166			.1394		
.905				.0995						
.919			.0937							
.940					.0567	.1274	.1281			
.953				.0519						
.955			.0452							
.965		.0637								

ALPHA (3) = 4.017 BETA (5) = 8.288 MACH = .59640 Q = 594.21 P = 2386.5 RN/L = 4.8659

SECTION (1)LEFT WING TOP SURF DEPENDENT VARIABLE CP

2Y/BW	.2350	.2990	.3640	.4270	.5340	.6730	.7800	.8870	.9720	1.0000
X/CW										
.000	-.3134	-.4094	-.2344	-.0357	.2387	.2176	.1964	.1191	-.4478	
.010		-.3298	-.1277		-.3113	-.2409	-.3522	-.5137		
.020		-.2511		.0000	-.3741	-.3931	-.4701	-.5704	-.5533	
.040			-.1043	-.3098						
.041	-.2342									
.050					-.5105	-.5630	-.6031	-.6276		
.059									-.5189	
.080					-.6002					
.081				-.3599						
.086			-.1187							
.094		-.2247								
.113	-.1725									
.150					-.5797	-.6319	-.6493	-.6067		
.157									-.4558	
.163			.0000							
.177				-.4127						
.229		-.0379								
.245			-.3827							
.247	-.0809									
.250					-.5412	-.5949	-.6298	-.6321		

AMES 11-073(OA148) -140A/B/C ORB LEFT WING TOP (XEBU75)

ALPHA (3) = 4.017 BETA (5) = 8.288

SECTION (1)LEFT WING TOP SURF DEPENDENT VARIABLE CP

2Y/BW	.2350	.2990	.3640	.4270	.5340	.6730	.7800	.8870	.9720	1.0000
X/CW										
.274				-.4123						
.345									-.2673	
.362		-.1533								
.390			-.3462							
.400					-.3242	-.3628		-.3557		
.402				-.3312						
.418										-.6290
.429	-.0705									
.497		-.3333								
.503									-.2012	
.547	-.2606									
.550					-.1443	-.1469				
.565				-.1640						
.600								-.0434		
.633	-.2938									
.637			-.0780							
.650							-.0010			
.670									.0171	
.700		-.0782				.0422				
.723										-.1631
.725					.0645					
.727	-.0963									
.750							.3530	.2298		
.760				.0136						
.775					.2404	.1937				
.793	.0892									
.798			.0656							
.808				.2788						
.834		.0295								
.839			.2669							
.850					.1719	.1504	.1809			
.857				.1748						
.862									.0596	
.865		.3192								
.879			.1595							
.900		.1197			.1007			.1363		
.905				.1053						
.919			.0752							
.950					.0563	.1191	.1251			
.953				.0553						
.955			.0303							
.965		.0512								

AMES 11-073(OA148) -140A/B/C ORB LEFT WING TOP (XEBU75)

ALPHA (4) = 7.959 BETA (1) = -7.893 MACH = .59626 Q = 593.97 P = 2386.7 RN/L = 4.9657

SECTION (1)LEFT WING TOP SURF DEPENDENT VARIABLE CP

2Y/BW	.2350	.2990	.3640	.4270	.5340	.6730	.7800	.8870	.9720	1.0000
X/CW										
.000	-.0719	-.1237	-.1563	.2109	.4323	.3921	.3332	.1660	-.4503	
.010		-.2218	-.1618		-.4792	-.4466	-.6819	-1.0276		
.020		-.2017		.0000	-.6083	-.6995	-.8507	-1.0781	-.9967	
.040			-.1239	-.4929						
.041	-.0906									
.050					-.8328	-.9818	-1.0871	-1.1495		
.069									-.9869	
.080					-.9854					
.081				-.6353						
.085			-.1457							
.099		-.1476								
.113	-.0731									
.150					-.8857	-1.0133	-1.0633	-.9840		
.157									-1.0238	
.163			.0000							
.177				-.6786						
.229		-.0625								
.246			-.4979							
.247	-.0507									
.250					-.7068	-.8026	-.9040	-.9743		
.274				-.5526						
.345									-.7632	
.362		-.2488								
.390			-.4091							
.400					-.3004	-.3937		-.5181		
.402				-.2927						
.418										-1.0133
.429	-.0979									
.497		-.3960								
.503									-.6688	
.547	-.3175									
.550					-.0135	-.1086				
.565				-.0100						
.600								-.1306		
.633	-.2789									
.637			.0078							
.650							.0112			
.670									-.3330	
.700		.0309				.1022				
.723										-.4398
.725					.1639					
.727	.0228									
.750							.3673	.1757		
.760				.1366						
.775					.2709	.2853				

AMES 11-073(OA148) -140A/B/C ORB LEFT WING TOP (XEBU75)

ALPHA (4) = 7.959 BETA (1) = -7.893

SECTION (1)LEFT WING TOP SURF DEPENDENT VARIABLE CP

2Y/BW	.2350	.2990	.3640	.4270	.5340	.6730	.7800	.8870	.9720	1.0000
X/CW										
.793	.2889									
.798			.1738							
.808				.2656						
.824		.1923								
.839			.3717							
.850					.2424	.2481	.1389			
.857				.2359						
.862									-.1688	
.865		.4355								
.879			.2697							
.900		.2611			.1775			.1157		
.905				.1805						
.919			.1863							
.950					.1112	.1931	.1389			
.953				.1285						
.955			.1251							
.965		.1607								

ALPHA (4) = 7.971 BETA (2) = -3.863 MACH = .59626 Q = 593.97 P = 2385.7 RN/L = 4.8657

SECTION (1)LEFT WING TOP SURF DEPENDENT VARIABLE CP

2Y/BW	.2350	.2990	.3640	.4270	.5340	.6730	.7800	.8870	.9720	1.0000
X/CW										
.000	-.1582	-.2827	-.3413	.0424	.2880	.2441	.1831	.0065	-.6795	
.010		-.3528	-.2859		-.6186	-.6028	-.8173	-1.1737		
.020		-.3024		.0000	-.6991	-.8264	-.9813	-1.1979	-1.0960	
.040			-.2094	-.5762						
.041	-.1564									
.050					-.8887	-1.0345	-1.1491	-1.2270		
.069									-1.0137	
.080					-1.0068					
.081				-.6675						
.086			-.2049							
.094		-.1793								
.113	-.1269									
.150					-.8811	-1.0157	-1.0677	-.9719		
.157									-.5968	
.163			.0000							
.177				-.6946						
.229		-.0939								
.246			-.5097							
.247	-.0912									
.250					-.7127	-.8109	-.8663	-.9491		

AMES 11-073(OA148) -140A/B/C ORB LEFT WING TOP (XEBU75)

ALPHA (4) = 7.971 BETA (2) = -3.863

SECTION (1)LEFT WING TOP SURF DEPENDENT VARIABLE CP

2Y/BW	.2350	.2990	.3640	.4270	.5340	.6730	.7800	.8870	.9720	1.0000
X/CW										
.274				-.5718						
.345									-.7183	
.362		-.2837								
.390			-.4337							
.400					-.3224	-.4133		-.5082		
.402				-.3194						
.418										-1.2611
.429	-.1231									
.497		-.4366								
.503									-.6069	
.547	-.3499									
.550					-.0488	-.1204				
.575				-.0648						
.600								-.1287		
.633	-.3159									
.637			-.0319							
.650							.0026			
.670									-.2895	
.700		-.0350				.0853				
.723										-.4605
.725					.1273					
.727	-.0277									
.750							.3607	.1873		
.760				.1057						
.775					.1971	.2401				
.793	.2263									
.798			.1168							
.808				.2701						
.834		.1522								
.839			.3136							
.850					.1891	.2268	.1852			
.857				.2148						
.862									-.1565	
.865		.4765								
.879			.2208							
.900		.2341			.1271			.1175		
.905				.1530						
.919			.1413							
.950					.0811	.1815	.1339			
.953				.1007						
.955			.0977							
.965		.1391								

AMES 11-073(OA148) -140A/B/C ORB LEFT WING TOP (XEBU75)

ALPHA (4) = 8.077 BETA (3) = .178 MACH = .59526 Q = 593.97 P = 2386.7 RN/L = 4.8657

SECTION (1)LEFT WING TOP SURF DEPENDENT VARIABLE CP

2Y/BW	.2050	.2930	.3640	.4270	.5340	.6730	.7800	.8870	.9720	1.0000
X/CW										
.000	-.2575	-.4745	-.5227	-.1445	.1462	.1017	.0295	-.1595	-.9054	
.010		-.4782	-.3775		-.7423	-.7376	-.9534	-1.2739		
.020		-.3970		.0090	-.7849	-.9299	-1.0715	-1.2694	-1.1657	
.040			-.2295	-.6042						
.041	-.2219									
.050					-.9210	-1.0729	-1.1811	-1.2385		
.069									-1.0098	
.080					-1.0060					
.081				-.6745						
.086			-.2098							
.094		-.2110								
.113	-.1841									
.150					-.8641	-.9901	-1.0392	-.9560		
.157									-.9083	
.163			.0000							
.177				-.6708						
.220		-.1573								
.246			-.4938							
.247	-.1056									
.250					-.7084	-.8004	-.8538	-.9251		
.274				-.5501						
.345									-.6274	
.352		-.3225								
.390			-.4589							
.400					-.3344	-.4162		-.4908		
.402				-.3557						
.419										-1.4413
.429	-.1278									
.497		-.4678								
.503									-.5301	
.547	-.3756									
.550					-.1075	-.1253				
.565				-.1219						
.600								-.1109		
.633	-.3469									
.637			-.1121							
.650							-.0085			
.670									-.2131	
.700		-.0208				.0680				
.723										-.3864
.725					.0758					
.727	-.0615									
.750							.3469	.1973		
.760				.0804						
.775					.1780	.1784				

AMES 11-073(OA148) -140A/B/C ORB LEFT WING TOP (XE8U75)

ALPHA (4) = 8.077 BETA (3) = .178

SECTION (1)LEFT WING TOP SURF DEPENDENT VARIABLE CP

2Y/BW	.2350	.2990	.3640	.4270	.5340	.6730	.7800	.8870	.9720	1.0000
X/CW										
.793	.1636									
.799			.0740							
.808				.2569						
.834		.1945								
.829			.3387							
.850					.1652	.1945	.1752			
.857				.1607						
.862									-.0717	
.865		.4037								
.879			.2298							
.900		.1884			.1140			.1146		
.905				.0895						
.919			.1445							
.950					.0906	.1566	.1303			
.953				.0351						
.955			.0999							
.965		.1[illegible]								

ALPHA (4) = 8.079 BETA (4) = 4.235 MACH = .59626 Q = 593.97 P = 2386.7 RN/L = 4.8657

SECTION (1)LEFT WING TOP SURF DEPENDENT VARIABLE CP

2Y/BW	.2350	.2990	.3640	.4270	.5340	.6730	.7800	.8870	.9720	1.0000
X/CW										
.000	-.3476	-.6207	-.5020	-.3182	-.0176	-.0682	-.1537	-.3767	-1.2532	
.010		-.4891	-.2607		-.8609	-.8783	-1.1314	-1.4637		
.020		-.3538		.0000	-.8563	-1.0392	-1.2015	-1.4613	-1.2810	
.040			-.2317	-.5819						
.041	-.2773									
.050					-.9391	-1.0990	-1.2441	-1.3298		
.069									-1.0778	
.080					-.9905					
.081				-.6096						
.086			-.2539							
.094		-.3793								
.113	-.2258									
.150					-.8353	-.9685	-1.0058	-.9402		
.157									-.8846	
.153			.0000							
.177				-.6054						
.229		-.2060								
.246			-.5971							
.247	-.1165									
.250					-.6887	-.7848	-.8394	-.8855		

AMES 11-073(OA148) -140A/B/C CRB LEFT WING TOP (XE8U75)

ALPHA (4) = 8.079 BETA (4) = 4.235

SECTION (1)LEFT WING TOP SURF DEPENDENT VARIABLE CP

2Y/BW	.2350	.2990	.3640	.4270	.5340	.6730	.7800	.8870	.9720	1.0000
X/CW										
.274				-.5559						
.345									-.6086	
.362		-.2378								
.390			-.5940							
.400					-.3568	-.4123		-.4643		
.402				-.3747						
.418										-1.7528
.429	-.1393									
.437		-.4406								
.503									-.4938	
.547	-.3971									
.560					-.1815	-.1294				
.585				-.1577						
.600								-.1105		
.633	-.3525									
.637			-.0841							
.640							-.0117			
.670									-.2528	
.700		-.0591				.0299				
.723										-.3838
.725					.0721					
.727	-.0977									
.750							.2578	.2022		
.760				-.0306						
.775					.3164	.1294				
.793	.1143									
.797			.0672							
.808				.2180						
.834		.0673								
.839			.3202							
.850					.1971	.1296	.1590			
.857				.1337						
.862									-.0647	
.865		.3406								
.879			.1982							
.900		.1534			.1270			.1118		
.905				.0921						
.919			.1164							
.950					.0883	.1180	.1090			
.953				.0647						
.985			.0694							
.985		.0824								

AMES 11-073(OA148) -140A/B/C ORB LEFT WING TOP (XEBU75)

ALPHA (4) = 8.076 BETA (5) = 8.290 MACH = .59626 Q = 593.97 P = 2386.7 RN/L = 4.8657

SECTION (1)LEFT WING TOP SURF DEPENDENT VARIABLE CP

2Y/BW	.2350	.2390	.3640	.4270	.5340	.6730	.7800	.8970	.9720	1.0000
X/CW										
.000	-.4701	-.7145	-.3558	-.4613	-.2179	-.2397	-.3426	-.5535	-1.5390	
.010		-.4045	-.3077		-.9624	-1.0177	-1.2669	-1.5387		
.020		-.3969		.0000	-.9354	-1.0916	-1.2541	-1.5297	-1.2770	
.040			-.3046	-.4752						
.041	-.3835									
.050					-.9402	-1.1166	-1.2334	-1.3153		
.069									-1.0247	
.083					-.9399					
.081				-.5437						
.085			-.3374							
.094		-.4142								
.113	-.2215									
.150					-.7712	-.9141	-.9632	-.8975		
.157									-.7980	
.163			.0000							
.177				-.5705						
.229		-.2945								
.246			-.7475							
.247	-.1438									
.250					-.6047	-.7367	-.7863	-.8224		
.274				-.5519						
.345									-.5422	
.362		-.2068								
.390			-.4926							
.400					-.4011	-.3728		-.4106		
.402				-.5207						
.418										-1.8589
.429	-.1410									
.497		-.4444								
.503									-.4805	
.547	-.3764									
.550					-.1754	-.1526				
.565				-.2686						
.600								-.0790		
.633	-.3611									
.637			-.1052							
.650							-.0164			
.670									-.0988	
.700		-.0935				-.0042				
.723										-.3416
.725					.0494					
.727	-.1263									
.750							.1350	.1767		
.760				-.0135						
.775					.1931	.1217				

AMES 11-073(OA148) -140A/B/C ORB LEFT WING TOP (XEBU75)

ALPHA (4) = 8.076 BETA (5) = 8.290

SECTION (1)LEFT WING TOP SURF DEPENDENT VARIABLE CP

2Y/BW	.2350	.2990	.3640	.4270	.5340	.6730	.7800	.8870	.9720	1.0000
X/CW										
.793	.0620									
.798			.0449							
.808				.2950						
.834		.0235								
.839			.2904							
.850					.0690	.1094	.1468			
.857				.1808						
.862									-.0064	
.865		.2855								
.870			.1788							
.900		.1297			-.0203			.1043		
.905				.1166						
.919			.0960							
.950					-.0581	.1369	.0963			
.953				.0811						
.955			.0546							
.965		.0643								

ALPHA (5) = 11.984 BETA (1) = -7.850 MACH = .59636 Q = 594.09 P = 2386.3 RN/L = 4.8671

SECTION (1)LEFT WING TOP SURF DEPENDENT VARIABLE CP

2Y/BW	.2350	.2990	.3640	.4270	.5340	.6730	.7800	.8870	.9720	1.0000
X/CW										
.000	-.1524	-.4906	-.7377	-.2936	-.0432	-.1550	-.2816	-.5498	-1.5298	
.010		-.5921	-.6156	.	-1.3753	-1.4212	-1.8624	-2.2302		
.020		-.4731		.0000	-1.3999	-1.6547	-1.3625	-2.3778	-2.3563	
.040			-.4703	-1.0023						
.041	-.1517									
.050					-1.5106	-1.8076	-2.1164	-2.2963		
.069									-1.7242	
.080					-1.5838					
.081				-1.0570						
.086			-.4168							
.094		-.2173								
.113	-.1660									
.150					-1.1622	-1.2853	-1.2970	-1.2660		
.157									-1.6302	
.163			.0000							
.177				-.8963						
.229		-.1923								
.246			-.6426							
.247	-.0918									
.250					-.8321	-.9870	-1.0754	-1.2266		

AMES 11-073(OA148) -140A/B/C ORB LEFT WING TOP (XE8U75)

ALPHA (5) = 11.984 BETA (1) = -7.850

SECTION (1)LEFT WING TOP SURF DEPENDENT VARIABLE CP

2Y/BW	.2350	.2990	.3640	.4270	.5340	.6730	.7800	.8870	.9720	1.0000
X/CW										
.274				-.6295						
.345									-1.1053	
.362		-.4504								
.390			-.5527							
.400					-.2883	-.4157		-.6207		
.402				-.3901						
.418										-1.7071
.429	-.1825									
.497		-.6547								
.503									-1.0708	
.547	-.4507									
.550					-.0718	-.0715				
.555				-.1344						
.600								-.2569		
.633	-.3585									
.637			-.0243							
.650							-.0319			
.670									-.6997	
.700		-.0381				.0548				
.723										-.8424
.725					.0730					
.727	.0071									
.750							.1526	.0660		
.760				.1106						
.775					.1741	.1400				
.793	.2745									
.798			.0560							
.808				.2834						
.834		.1907								
.839			.2783							
.850					.1472	.1877	.1357			
.857				.1836						
.862									-.4590	
.865		.5327								
.879			.2282							
.900		.3107			.0932			.0575		
.905				.1085						
.919			.1712							
.950					.0805	.1770	.1060			
.953				.0530						
.955			.1498							
.965		.2030								

DATE 11 FEB 76 TABULATED PRESSURE DATA - OA148 (AMES 11-073-1) PAGE 5201

AMES 11-073(OA148) -140A/B/C ORB LEFT WING TOP (XEBU75)

ALPHA (5) = 12.003 BETA (2) = -3.840 MACH = .59636 Q = 594.09 P = 2386.3 RN/L = 4.8671

SECTION (1)LEFT WING TOP SURF DEPENDENT VARIABLE CP

2Y/BW	.2350	.2990	.3640	.4270	.5340	.6730	.7800	.8870	.9720	1.0000
X/CW										
.000	-.2676	-.7172	-.8377	-.5226	-.2423	-.3596	-.4915	-.7640	-1.9392	
.010		-.7122	-.5528		-1.5443	-1.6166	-2.0483	-2.4705		
.020		-.5230		.0000	-1.5253	-1.7826	-2.1401	-2.5652	-2.4279	
.040			-.3195	-.9995						
.041	-.2346									
.060					-1.5399	-1.8607	-2.1799	-2.4316		
.069									-1.8433	
.080					-1.5585					
.081				-.9826						
.086			-.3434							
.094		-.3700								
.113	-.2341									
.150					-1.1435	-1.3142	-1.3661	-1.2375		
.157									-1.4293	
.163			.0000							
.177				-.8129						
.229		-.4297								
.245			-.6870							
.247	-.1156									
.250					-.7957	-.9677	-1.0445	-1.1530		
.274				-.7033						
.345									-1.1574	
.362		-.5784								
.390			-.5566							
.400					-.3566	-.4122		-.5748		
.402				-.4715						
.418										-1.9581
.429	-.1811									
.497		-.6277								
.503									-1.0540	
.547	-.4896									
.550					-.1746	-.1111				
.565				-.0597						
.600								-.2279		
.633	-.4061									
.637			-.1659							
.650							-.0458			
.670									-.7166	
.700		-.0274				.0163				
.723										-.6723
.725					.0236					
.727	-.0656									
.750							.0941	.0459		
.760				.0993						
.775					.1913	.1323				

ORIGINAL PAGE IS OF POOR QUALITY

AMES 11-073(OA148) -140A/3/C ORB LEFT WING TOP (XEBU75)

ALPHA (5) = 12.003 BETA (2) = -3.840

SECTION (1)LEFT WING TOP SURF DEPENDENT VARIABLE CP

2Y/BW	.2350	.2990	.3640	.4270	.5340	.6730	.7800	.8870	.9720	1.0000
X/CW										
.793	.1879									
.798			.0424							
.808				.2517						
.834		.1266								
.839			.3041							
.850					.1887	.1327	.1139			
.857				.1392						
.862									-.4767	
.865		.4460								
.879			.2011							
.900		.2587			.1549			.0474		
.905				.0685						
.919			.1390							
.950					.1399	.1373	.0997			
.953				.0144						
.955			.1187							
.965		.1705								

ALPHA (5) = 12.008 BETA (3) = .180 MACH = .59636 Q = 594.09 P = 2386.3 RN/L = 4.8671

SECTION (1)LEFT WING TOP SURF DEPENDENT VARIABLE CP

2Y/BW	.2350	.2990	.3640	.4270	.5340	.6730	.7800	.8870	.9720	1.0000
X/CW										
.000	-.4031	-.8928	-.8541	-.7339	-.4356	-.5410	-.6864	-.9469	-2.2650	
.010		-.6175	-.4171		-1.6787	-1.7899	-2.1925	-2.6205		
.020		-.4694		.0000	-1.5582	-1.8788	-2.3051	-2.6966	-2.1278	
.040			-.3815	-.8782						
.041	-.3592									
.050					-1.5173	-1.8482	-2.1595	-2.5220		
.069									-1.6306	
.080					-1.4648					
.081				-.8284						
.086			-.4365							
.094		-.5104								
.113	-.2295									
.150					-1.0599	-1.2712	-1.3241	-1.2005		
.157									-1.3401	
.163			.0000							
.177				-.8224						
.229		-.6610								
.245			-.7602							
.247	-.1550									
.250					-.7170	-.9134	-.9852	-1.0426		

AMES 11-073(OA148) -140A/B/C ORB LEFT WING TOP (XE8U75)

ALPHA (5) = 12.008 BETA (3) = .180

SECTION (1)LEFT WING TOP SURF DEPENDENT VARIABLE CP

2Y/BW	.2350	.2990	.3640	.4270	.5340	.6730	.7800	.8870	.9720	1.0000
X/CW										
.274				-.7111						
.345										
.362		-.5177							-.9807	
.390			-.6700							
.403										
.402					-.4273	-.3720		-.5018		
.419				-.4267						
.429	-.2283									-1.4679
.497		-.6274								
.503										
.547	-.5090								-.9797	
.550										
.565					-.2569	-.1598				
.600				-.1665						
.633	-.4192							-.1844		
.637			-.2070							
.650										
.670							-.0818			
.700		-.0604							-.6574	
.725						-.0248				
.725										-.4632
.727	-.1009				.0848					
.750										
.750				-.0577			.0325	-.0370		
.775										
.793	.1400				.2688	.0534				
.798			.0462							
.808				.1223						
.834		.0979								
.843			.3369							
.850					.1967	.0360	.0777			
.857				.0315						
.862										
.865		.3947							-.4066	
.879			.2344							
.900		.2255								
.905					.1341			.0299		
.919				.0001						
.950			.1577							
.953					.1055	.0833	.0939			
.955				-.0193						
.965			.1272							
		.1516								

AMES 11-073(OA148) -140A/B/C ORB LEFT WING TOP (XEBU75)

ALPHA (5) = 12.057 BETA (4) = 4.244 MACH = .59636 Q = 594.09 P = 2386.3 RN/L = 4.8671

SECTION (1)LEFT WING TOP SURF DEPENDENT VARIABLE CP

2Y/BW	.2350	.2990	.3640	.4270	.5340	.6730	.7800	.8870	.9720	1.0000
X/CW										
.000	-.5179	-.9783	-.5934	-.8534	-.6112	-.7503	-.9233	-1.1903	-2.4699	
.010		-.5450	-.4547		-1.7284	-1.9602	-2.3582	-2.7025		
.020		-.5282		.0000	-1.5632	-1.9790	-2.5120	-2.7251	-1.5757	
.040			-.4531	-.7147						
.041	-.5094									
.050					-1.4247	-1.8033	-2.2711	-2.5390		
.059									-1.4502	
.080					-1.3402					
.081				-.7126						
.085			-.4900							
.094		-.5694								
.113	-.2612									
.150					-.9352	-1.2019	-1.2622	-1.1674		
.157									-1.3352	
.163			.0000							
.177				-.7835						
.223		-.6932								
.246			-.8204							
.247	-.1980									
.250					-.7149	-.8202	-.9083	-.9130		
.274				-.6952						
.345									-1.1508	
.362		-.4847								
.390			-.7961							
.400					-.4925	-.4036		-.4215		
.402				-.5516						
.418										-1.0680
.429	-.2414									
.497		-.5789								
.503									-.9605	
.547	-.4974									
.550					-.2025	-.2409				
.565				-.4118						
.600								-.1516		
.633	-.4400									
.637			-.1601							
.650							-.1478			
.670									-.6493	
.700		-.0976				-.0762				
.723										-.3602
.725					.0247					
.727	-.1297									
.750							-.0042	-.0686		
.760				-.0757						
.775					.1360	.0894				

AMES 11-073(OA148) -140A/B/C ORB LEFT WING TOP (XEBU75)

ALPHA (5) = 12.057 BETA (4) = 4.244

SECTION (1)LEFT WING TOP SURF DEPENDENT VARIABLE CP

2Y/BW	.2350	.2990	.3640	.4270	.5340	.6730	.7800	.8870	.9720	1.0000
X/CW										
.793	.0946									
.798			.0536							
.808				.1976						
.834		.0574								
.839			.3299							
.850					.0293	.0732	.0317			
.857				.1460						
.862									-.3572	
.865		.3449								
.879			.2294							
.900		.1850			-.0644			-.0597		
.905				.1144						
.919			.1501							
.950					-.0835	.1090	.0712			
.953				.0979						
.955			.1079							
.965		.1135								

ALPHA (5) = 12.114 BETA (5) = 9.307 MACH = .59636 Q = 594.09 P = 2386.3 RN/L = 4.8671

SECTION (1)LEFT WING TOP SURF DEPENDENT VARIABLE CP

2Y/BW	.2350	.2990	.3640	.4270	.5340	.6730	.7800	.8870	.9720	1.0000
X/CW										
.000	-.6778	-1.0858	-.5590	-.9286	-.8441	-1.0100	-1.1766	-1.4179	-2.1600	
.010		-.5996	-.5057		-1.7823	-2.1516	-2.6116	-2.5476		
.020		-.6041		.0000	-1.5520	-2.1232	-2.6440	-2.5207	-1.2867	
.040			-.5124	-.7204						
.041	-.7078									
.060					-1.3272	-1.7396	-2.2246	-2.1522		
.069									-1.2357	
.080					-1.1767					
.081				-.7474						
.096			-.5581							
.094		-.6254								
.113	-.3423									
.150					-.8488	-1.1164	-1.1866	-1.3518		
.157									-1.0612	
.163			.0000							
.177				-.7554						
.229		-.8374								
.246			-.9826							
.247	-.2543									
.250					-.7521	-.7371	-.8182	-.8325		

AMES 11-073(OA148) -140A/B/C ORB LEFT WING TOP (XE8U75)

ALPHA (5) = 12.114 BETA (5) = 8.307

SECTION (1)LEFT WING TOP SURF DEPENDENT VARIABLE CP

2Y/BW	.2350	.2990	.3640	.4270	.5340	.6730	.7800	.8870	.9720	1.0000
X/CW										
.274				-.7232						
.345									-.9406	
.382		-.3943								
.390			-.6915							
.400					-.4577	-.4677		-.3639		
.402				-.7350						
.418										-.7817
.429	-.2354									
.497		-.5712								
.503									-.8701	
.547	-.4920									
.550					-.2847	-.2979				
.565				-.4144						
.600								-.1392		
.633	-.4448									
.637			-.1846							
.650							-.2071			
.670									-.5310	
.700		-.1304				-.1039				
.723										-.3355
.725					-.1038					
.727	-.1491									
.750							-.0227	-.0767		
.760				-.0556						
.775					-.0311	.0709				
.793	.0523									
.799			.0233							
.808				.2247						
.834		.0078								
.839			.2742							
.850					-.1375	.0182	.0214			
.857				.1614						
.862									-.3362	
.865		.2817								
.879			.1904							
.900		.1364			-.2008			-.0800		
.905				.1241						
.919			.1250							
.950					-.1687	.0495	.0483			
.953				.1012						
.955			.0792							
.965		.0779								

AMES 11-073(OA148) -140A/B/C ORB LEFT WING TOP (XEBU76) (05 AUG 75)

REFERENCE DATA

SREF = 2600.0000 SQ.FT. XMRP = 1076.6800 IN. XO
LREF = 474.8000 IN. YMRP = .0000 IN. YO
BREF = 936.0560 IN. ZMRP = 375.0000 IN. ZO
SCALE = .0300

PARAMETRIC DATA

RUDDER = -10.000 SPDBRK = .000
BDFLAP = -11.700 L-ELVN = 10.000
R-ELVN = -10.000 MACH = 1.400

ALPHA (1) = -4.004 BETA (1) = -3.853 MACH = 1.3930 Q = 598.57 P = 440.65 RN/L = 2.9057

SECTION (1)LEFT WING TOP SURF DEPENDENT VARIABLE CP

2Y/BW	.2350	.2990	.3640	.4270	.5340	.6730	.7800	.8870	.9720	1.0000
X/CW										
.030	-.1312	-.0998	-.0964	.2921	.7114	.6601	.6166	.6342	-.3194	
.010		-.0354	.0092		.7530	.7434	.7050	.6306		
.020		-.0254		.0000	.6720	.6419	.6161	.5896	.0137	
.040			.0580	.3929						
.041	-.0460									
.050					.4578	.4306	.4144	.4087		
.059									-.0380	
.080					.2789					
.081				.3059						
.086			.1717							
.094		-.0189								
.113	-.0330									
.150					.0498	.0591	.0946	.1197		
.157									-.1761	
.163			.0000							
.177				.1107						
.229		.0577								
.246			.1003							
.247	-.0302									
.250					-.0860	-.0950	-.0869	-.0901		
.275				-.0212						
.345									-.2137	
.362		.1468								
.390			-.0131							
.400					-.2135	-.2595		-.2878		
.402				-.1808						
.418										-.3870
.429	.058[illegible]									
.497		.0058								
.503									-.2521	
.547	.0718									
.550					-.2651	-.3026				
.555				-.1806						
.600								-.3605		
.633	-.0314									
.637			-.1480							
.650							-.3600			
.670									-.4807	

AMES 11-073(OA148) -140A/B/C ORB LEFT WING TOP (XEBU76)

ALPHA (1) = -4.004 BETA (1) = -3.853

SECTION (1)LEFT WING TOP SURF DEPENDENT VARIABLE CP

2Y/BW	.2350	.2990	.3640	.4270	.5340	.6730	.7800	.8870	.9720	1.0000
X/CW										
.700		-.1219				-.3172				
.723										
.725										-.2943
.727	-.1050				-.0573					
.750										
.760							-.5054	-.5209		
.775				.0108						
.733	.2483				-.2121	-.4009				
.798			.0669							
.808				-.1330						
.834		.1188								
.839			-.1509							
.850					-.1332	-.2181	-.4985			
.857				-.1514						
.862										
.865		-.2236							-.4247	
.879			-.1717							
.900		-.1257			-.1516			-.4673		
.905				-.1681						
.919			-.1442							
.950					-.1393	-.1302	-.2513			
.953				-.1455						
.955			-.1495							
.965		-.1381								

ALPHA (1) = -4.001 BETA (2) = .191 MACH = 1.3930 Q = 598.57 P = 440.65 RN/L = 2.9057

SECTION (1)LEFT WING TOP SURF DEPENDENT VARIABLE CP

2Y/BW	.2350	.2990	.3640	.4270	.5340	.6730	.7800	.8870	.9720	1.0000
X/CW										
.000	-.1585	-.0695	-.0543	.2544	.6361	.5713	.5240	.5332	-.3824	
.010		-.0465	-.00[illegible]		.6654	.6495	.6124	.5435		
.020		-.0590		.0000	.5888	.5543	.5326	.5035	-.0712	
.040			.0314	.3127						
.041	-.1111									
.050					.3936	.3637	.3457	.3437		
.069									-.1095	
.080					.2224					
.091				.2430						
.096			.1275							
.094		-.0453								
.113	-.0980									
.153					.0263	.0303	.0580	.0864		

AMES 11-073(OA148) -140A/9/C ORB LEFT WING TOP (XEBU76)

ALPHA (1) = -4.001 BETA (2) = .191

SECTION (1)LEFT WING TOP SURF DEPENDENT VARIABLE CP

Y/BW	.2350	.2990	.3640	.4270	.5340	.6730	.7800	.8870	.9720	1.0000
X/CW										
.157									-.2271	
.163			.0000							
.177				.0853						
.229		.0337								
.243			.0655							
.247	-.0541									
.260					-.0983	-.1032	-.1093	-.1127		
.274				-.0283						
.345									-.2485	
.362		.1170								
.390			-.0249							
.400					-.2106	-.2564		-.2946		
.402				-.1884						
.418										-.4504
.429	.0300									
.437		-.0279								
.503									-.2760	
.547	.0487									
.560					-.2555	-.2892				
.565				-.1738						
.600								-.3590		
.633	-.0642									
.637			-.0474							
.650							-.3465			
.670									-.4844	
.700		-.0762				-.2653				
.723										-.3433
.725					-.0092					
.727	-.1019									
.750							-.4985	-.5310		
.760				.0376						
.775					-.2181	-.2796				
.793	.2394									
.798			.0589							
.819				-.1972						
.834		.0871								
.839			-.2003							
.850					-.1494	-.1966	-.4671			
.857				-.1917						
.862									-.4193	
.885		-.2615								
.893			-.2149							
.900		-.1539			-.1692			-.4584		
.905				-.2067						
.919			-.1749							

AMES 11-073(OA148) -140A/B/C ORB LEFT WING TOP (XEBU76)

ALPHA (1) = -4.001 BETA (2) = .191

SECTION (1)LEFT WING TOP SURF DEPENDENT VARIABLE CP

2Y/BW	.2350	.2990	.3640	.4270	.5340	.6730	.7800	.8870	.9720	1.0000
X/CW										
.950					-.1704	-.1171	-.2447			
.953				-.1812						
.955			-.1728							
.965		-.1729								

ALPHA (1) = -3.983 BETA (3) = 4.275 MACH = 1.3930 Q = 598.57 P = 440.65 RN/L = 2.9057

SECTION (1)LEFT WING TOP SURF DEPENDENT VARIABLE CP

2Y/BW	.2350	.2990	.3640	.4270	.5340	.6730	.7800	.8870	.9720	1.0000
X/CW										
.000	-.1621	-.0787	-.0295	.2556	.5678	[illegible]929	.4362	.4384	-.4331	
.010		-.0851	-.0031		.5790	[illegible]38	.5251	.4576		
.020		-.1015		.0000	.5103	[illegible]38	.4530	.4264	-.1479	
.040			.0228	.2654						
.041	-.1578									
.050					.3353	.2965	.2836	.2807		
.069									-.1769	
.080					.1801					
.081				.2022						
.086			.1046							
.094		-.0669								
.113	-.1504									
.150					.0081	.0028	.0270	.0467		
.157									-.2718	
.163			.0000							
.177				.0660						
.229		.0175								
.246			.0492							
.247	-.0643									
.250					-.1046	-.1176	-.1247	-.1367		
.274				-.0310						
.345									-.2871	
.362		.1082								
.390			-.0298							
.400					-.2192	-.2561		-.3087		
.402				-.1885						
.418										-.4890
.429	.0239									
.497		-.0403								
.503									-.3073	
.547	.0414									
.550					-.2487	-.2926				
.565				-.1559						

AMES 11-073(OA148) -140A/B/C ORB LEFT WING TOP (XE8U76)

ALPHA (1) = -3.993 BETA (3) = 4.275

SECTION (1)LEFT WING TOP SURF DEPENDENT VARIABLE CP

2Y/BW	.2350	.2990	.3640	.4270	.5340	.6730	.7800	.8970	.9720	1.0000
X/CW										
.600								-.3784		
.633	-.0878									
.637			.0352							
.650							-.3365			
.677									-.5035	
.700		-.0300				-.1262				
.723										-.3538
.725					.0243					
.727	-.0071									
.750							-.4978	-.5331		
.770				.0399						
.775					-.2074	-.2561				
.793	.3043									
.799			.0498							
.808				-.2026						
.834		.0778								
.839			-.2173							
.850					-.1765	-.1523	-.3429			
.857				-.2201						
.862									-.2816	
.865		-.2716								
.879			-.2365							
.900		-.1905			-.1968			-.2670		
.905				-.2337						
.919			-.1995							
.950					-.2011	-.1178	-.2152			
.953				-.2119						
.955			-.1914							
.965		-.1930								

ALPHA (2) = .029 BETA (1) = -3.866 MACH = 1.3913 Q = 598.64 P = 441.83 RN/L = 2.9093

SECTION (1)LEFT WING TOP SURF DEPENDENT VARIABLE CP

2Y/BW	.2350	.2990	.3640	.4270	.5340	.6730	.7800	.8870	.9720	1.0000
X/CW										
.000	-.0336	.0116	.0116	.4092	.7608	.7122	.6802	.6917	-.1459	
.013		.0178	.0344		.6629	.6484	.6051	.5107		
.020		-.0033		.0000	.5023	.5069	.4840	.4565	.0098	
.040			.0557	.2452						
.041	-.0369									
.050					.2821	.2717	.2559	.2561		
.069									-.0624	
.080					.1061					

AMES 11-073(OA148) -140A/B/C ORB LEFT WING TOP (XE8U76)

ALPHA (2) = .029 BETA (1) = -3.866

SECTION (1)LEFT WING TOP SURF DEPENDENT VARIABLE CP

2Y/BW	.2350	.2990	.3640	.4270	.5340	.6730	.7800	.8870	.9720	1.0000
X/CW										
.091				.1177						
.086			.1149							
.094		-.0587								
.113	-.0395									
.150					-.0922	-.0855	-.0485	-.0167		
.157									-.2234	
.163			.0000							
.177				-.0230						
.229		-.0045								
.246			-.0018							
.247	-.0599									
.250					-.2338	-.2366	-.2212	-.2070		
.274				-.1528						
.345									-.2812	
.362		.0684								
.390			-.1226							
.400					-.3322	-.3805		-.3867		
.402				-.2772						
.418										-.1800
.429	0072									
.497		-.0819								
.503									-.3335	
.547	.0051									
.550					-.3638	-.4102				
.565				-.2767						
.600								-.4080		
.633	-.1189									
.637			-.2340							
.650							-.4520			
.670									-.5405	
.700		-.1994				-.4121				
.723										-.2820
.725					-.1942					
.727	-.1756									
.750							-.5050	-.5017		
.760				-.1062						
.775					-.3611	-.5150				
.793	.0276									
.798			-.0606							
.808				-.2181						
.834		.0233								
.839			-.1921							
.850					-.2589	-.3275	-.3994			
.857				-.1892						
.862									-.5244	

AMES 11-073(OA148) -140A/B/C ORB LEFT WING TOP (XEBU76)

ALPHA (2) = .029 BETA (1) = -3.866

SECTION (1)LEFT WING TOP SURF DEPENDENT VARIABLE CP

2Y/BW	.2350	.2990	.3640	.4270	.5340	.6730	.7800	.8870	.9720	1.0000
X/CW										
.865		-.2672								
.879			-.1918							
.900		-.1450			-.2362			-.3992		
.905				-.1910						
.919			-.1640							
.950					-.1742	-.2541	-.3673			
.953				-.1707						
.955			-.1585							
.965		-.1669								

ALPHA (2) = .033 BETA (2) = .181 MACH = 1.3913 Q = 598.64 P = 441.83 RN/L = 2.9093

SECTION (1)LEFT WING TOP SURF DEPENDENT VARIABLE CP

2Y/BW	.2350	.2990	.3640	.4270	.5340	.6730	.7800	.8870	.9720	1.0000
X/CW										
.000	-.0470	-.0295	-.0298	.3550	.6667	.6217	.5894	.5899	-.1980	
.010		-.0482	-.0142		.4921	.5414	.5099	.4197		
.020		-.0712		.0000	.3995	.4109	.3986	.3682	-.0628	
.040			.0124	.1677						
.041	-.0928									
.050					.2111	.2001	.1906	.1903		
.069									-.1258	
.080					.0552					
.081				.0627						
.085			.0678							
.094		-.1151								
.113	-.1065									
.150					-.1212	-.1186	-.0832	-.0522		
.157									-.2657	
.163			.0000							
.177				-.0518						
.229		-.0264								
.246			-.0315							
.247	-.1098									
.250					-.2407	-.2572	-.2452	-.2269		
.274				-.1570						
.345									-.3103	
.352		.0414								
.390			-.1267							
.400					-.3171	-.3783		-.3971		
.402				-.2735						
.418										-.1958
.429	-.0159									

AMES 11-073(OA148) -140A/B/C ORB LEFT WING TOP (XEBU76)

ALPHA (2) = .033 BETA (2) = .181

SECTION : 1:LEFT WING TOP SURF DEPENDENT VARIABLE CP

2Y/BW	.2350	.2990	.3640	.4270	.5340	.6730	.7800	.8870	.9720	1.0000
X/CW										
.497		-.1048								
.503									-.3494	
.547	-.0209									
.550					-.3489	-.4013				
.565				-.2749						
.600								-.4320		
.633	-.1530									
.637			-.2278							
.650							-.4463			
.670									-.5204	
.700		-.1994				-.3850				
.723										-.3691
.725					-.1357					
.727	-.1771									
.750							-.5319	-.4261		
.760				-.0877						
.775					-.3174	-.4440				
.793	.1268									
.796			-.0410							
.803				-.2448						
.834		.0172								
.839			-.2558							
.850					-.2696	-.2713	-.3720			
.857				-.2329						
.862									-.4372	
.865		-.3006								
.879			-.2359							
.900		-.1865			-.2349			-.3712		
.905				-.2251						
.919			-.1869							
.950					-.1947	-.1932	-.3411			
.953				-.1987						
.955			-.1751							
.965		-.1889								

AMES 11-073(OA148) -140A/B/C ORB LEFT WING TOP (XE8U76)

ALPHA (3) = .029 BETA (3) = 4.255 MACH = 1.3913 Q = 598.64 P = 441.83 RN/L = 2.9093

SECTION (1)LEFT WING TOP SURF DEPENDENT VARIABLE CP

2Y/BW	.2350	.2990	.3640	.4270	.5340	.6730	.7800	.8870	.9720	1.0000
X/CW										
.000	-.0694	-.1040	-.0894	.2941	.5892	.5354	.4957	.4978	-.2017	
.010		-.1353	-.0612		.3912	.4427	.4092	.3254		
.020		-.1481		.0000	.3173	.3247	.3070	.2842	-.1255	
.040			-.0212	.1187						
.041	-.1372									
.053					.1539	.1349	.1176	.1197		
.069									-.1813	
.080					.0123					
.081				.0370						
.086			.0339							
.094		-.1665								
.113	-.1640									
.150					-.1355	-.1500	-.1221	-.0929		
.157									-.3057	
.163			.0000							
.177				-.0710						
.229		-.0346								
.246			-.0360							
.247	-.1420									
.250					-.2291	-.2732	-.2641	-.2569		
.274				-.1503						
.345									-.3294	
.362		.0401								
.330			-.1276							
.400					-.3115	-.3651		-.4147		
.402				-.2697						
.418										-.1618
.429	-.0162									
.497		-.1102								
.503									-.3586	
.547	-.0232									
.550					-.3471	-.3869				
.565				-.2697						
.600								-.4493		
.633	-.1728									
.637			-.1709							
.650							-.4368			
.670									-.4156	
.700		-.1827				-.3403				
.723										-.5089
.725					-.1198					
.727	-.1760									
.750							-.4835	-.3831		
.760				-.0743						
.775					-.3023	-.3544				

AMES 11-073(OA148) -140A/B/C ORB LEFT WING TOP (XEBU76)

ALPHA (2) = .029 BETA (3) = 4.255

SECTION (1)LEFT WING TOP SURF DEPENDENT VARIABLE CP

2Y/BW	.2350	.2990	.3640	.4270	.5340	.6730	.7800	.8870	.9720	1.0000
X/CW										
.793	.1634									
.798			-.0357							
.808				-.2573						
.834		.0019								
.839			-.2742							
.850					-.2667	-.2227	-.3628			
.857				-.2629						
.862									-.3627	
.865		-.3168								
.879			-.2670							
.900		-.2110			-.2426			-.3359		
.905				-.2523						
.919			-.2120							
.950					-.2209	-.1591	-.3193			
.953				-.2218						
.955			-.2001							
.965		-.2092								

ALPHA (3) = 3.961 BETA (1) = -3.67 MACH = 1.3919 Q = 599.88 P = 442.29 RN/L = 2.9174

SECTION (1)LEFT WING TOP SURF DEPENDENT VARIABLE CP

2Y/BW	.2350	.2990	.3640	.4270	.5340	.6730	.7800	.8870	.9720	1.0000
X/CW										
.000	.0586	.0235	-.0464	.3835	.7537	.7460	.7192	.7084	.0788	
.010		-.0240	-.0595		.3911	.4927	.4579	.3459		
.020		-.0412		.0000	.2756	.3265	.3186	.2796	-.0509	
.040			-.0500	.0393						
.041	-.0201									
.050					.0708	.0993	.0925	.0834		
.069									-.1057	
.080					-.0862					
.081				-.0685						
.086			-.0103							
.094		-.0852								
.113	-.0409									
.150					-.2924	-.2425	-.1954	-.1573		
.157									-.2818	
.153			.0000							
.177				-.1943						
.229		-.0878								
.246			-.1283							
.247	-.0657									
.250					-.3569	-.3764	-.3462	-.3138		

AMES 11-073(OA148) -140A/B/C ORB LEFT WING TOP (XEBU76)

ALPHA (3) = 3.961 BETA (1) = -3.871

SECTION (1)LEFT WING TOP SURF DEPENDENT VARIABLE CP

2Y/BW	.2350	.2990	.3640	.4270	.5340	.5730	.7800	.8870	.9720	1.0000
X/CW										
.274				-.2843						
.345									-.3519	
.362		-.0223								
.390			-.2279							
.400					-.4432	-.4862		-.4650		
.402				-.3686						
.418										-.1389
.429	-.0564									
.437		-.1645								
.503									-.4199	
.547	-.0665									
.550					-.4521	-.5183				
.565				-.3590						
.600								-.4727		
.633	-.2163									
.637			-.3132							
.650							-.5022			
.670									-.5673	
.700		-.2780				-.5156				
.723										-.5458
.725					-.2872					
.727	-.2487									
.750							-.4048	-.4155		
.760				-.1733						
.775					-.4648	-.5352				
.793	-.1734									
.792			-.1631							
.808				-.3330						
.824		-.0623								
.839			-.2910							
.850					-.3386	-.3803	-.4122			
.857				-.2931						
.862									-.5867	
.865		-.3005								
.879			-.2293							
.900		-.1679			-.2797			-.4099		
.905				-.2522						
.919			-.1858							
.930					-.2049	-.3532	-.4107			
.953				-.2105						
.955			-.1739							
.965		-.1754								

AMES 11-073(OA148) -140A/B/C ORB LEFT WING TOP (XEBU76)

ALPHA (3) = 3.952 BETA (2) = .187 MACH = 1.3919 Q = 599.88 P = 442.29 RN/L = 2.3174

SECTION (1)LEFT WING TOP SURF DEPENDENT VARIABLE CP

2Y/BW	.2350	.2990	.3640	.4270	.5340	.6730	.7800	.8870	.9720	1.0000
X/CW										
.000	.0284	-.0830	-.2079	.2671	.6536	.6437	.6257	.6039	.0204	
.010		-.1358	-.2051		.2665	.3817	.3564	.2443		
.020		-.1368		.0000	.1780	.2324	.2281	.1901	-.1221	
.040			-.1535	-.0252						
.041	-.0707									
.050					.0052	.0262	.0232	.0133		
.069									-.1670	
.080					-.1350					
.081				-.1105						
.086			-.0689							
.094		-.1473								
.113	-.1027									
.150					-.3193	-.2804	-.2365	-.2008		
.157									-.3216	
.163			.0000							
.177				-.2102						
.229		-.1251								
.246			-.1448							
.247	-.1165									
.250					-.3685	-.3958	-.3721	-.3435		
.274				-.2822						
.345									-.3821	
.362		-.0345								
.390			-.2208							
.400					-.4305	-.4938		-.4811		
.402				-.3551						
.418										-.2595
.429	-.0678									
.497		-.1776								
.503									-.4206	
.547	-.0817									
.550					-.4225	-.5088				
.565				-.3477						
.600								-.4875		
.633	-.2335									
.637			-.3058							
.650							-.5162			
.670									-.5938	
.700		-.2796				-.4909				
.723										-.6177
.725					-.2260					
.727	-.2479									
.750							-.4273	-.4364		
.750				-.1572						
.775					-.4062	-.4990				

AMES 11-073(OA148) -140A/B/C ORB LEFT WING TOP (XE8U76)

ALPHA (3) = 3.962 BETA (2) = .187

SECTION (1)LEFT WING TOP SURF DEPENDENT VARIABLE CP

2Y/BW	.2350	.2990	.3640	.4270	.5340	.6730	.7800	.8870	.9720	1.0000
X/CW										
.793	-.0075									
.798			-.1282							
.808				-.3139						
.834		-.0219								
.840			-.2972							
.850					-.3563	-.3162	-.4265			
.857				-.3171						
.862									-.6084	
.865		-.3209								
.879			-.2888							
.900		-.2184			-.3258			-.4276		
.905				-.2925						
.919			-.2160							
.940					-.2444	-.2257	-.4150			
.953				-.2380						
.955			-.1955							
.965		-.2146								

ALPHA (3) = 3.963 BETA (3) = 4.246 MACH = 1.3919 Q = 599.88 P = 442.29 RN/L = 2.9174

SECTION : 1)LEFT WING TOP SURF DEPENDENT VARIABLE CP

2Y/BW	.2350	.2990	.3640	.4270	.5340	.6730	.7800	.8870	.9720	1.0000
X/CW										
.000	-.0035	-.2279	-.4241	.1310	.5407	.5423	.5296	.5113	-.0652	
.010		-.2837	-.3739		.1460	.2642	.2402	.1375		
.020		-.2595		.0000	.0671	.1299	.1269	.0877	-.2077	
.040			-.2337	-.0942						
.041	-.1169									
.050					-.0701	-.0503	-.0546	-.0686		
.069									-.2359	
.080					-.1849					
.081				-.1484						
.086			-.1263							
.094		-.2107								
.113	-.1595									
.150					-.3264	-.3140	-.2826	-.2501		
.157									-.3645	
.163			.0000							
.177				-.2040						
.240		-.1258								
.246			-.1336							
.247	-.1652									
.250					-.3572	-.4145	-.4019	-.3786		

AMES 11-073(OA148) -140A/B/C ORB LEFT WING TOP (XEBJ78)

ALPHA (3) = 3.963 BETA (3) = 4.246

SECTION (1)LEFT WING TOP SURF DEPENDENT VARIABLE CP

2Y/BW	.2350	.2990	.3640	.4270	.5340	.6730	.7800	.8870	.9720	1.0000
X/CW										
.274				-.2620						
.345									-.4200	
.382		-.0334								
.390			-.2070							
.400					-.4005	-.4870		-.5012		
.402				-.3384						
.418										-.4245
.429	-.0712									
.497		-.1779								
.503									-.4418	
.547	-.0796									
.550					-.4108	-.4887				
.565				-.3372						
.600								-.5028		
.633	-.2444									
.637			-.3086							
.650							-.5240			
.670									-.5687	
.700		-.2794				-.4351				
.723										-.5885
.725					-.2082					
.727	-.2453									
.750							-.5212	-.4524		
.760				-.1469						
.775					-.3791	-.3463				
.793	.0904									
.798			-.0855							
.808				-.3184						
.834		-.0246								
.839			-.3179							
.850					-.3368	-.2312	-.4462			
.857				-.3258						
.862									-.5647	
.865		-.3521								
.879			-.3260							
.900		-.2361			-.2870			-.4189		
.905				-.2992						
.919			-.2256							
.950					-.2224	-.2063	-.3823			
.953				-.2520						
.965			-.2163							
.985		-.2787								

AMES 11-073(OA148) -140A/B/C ORB LEFT WING TOP (XE9D75)

ALPHA (4) = 7.887 BETA (1) = -3.866 MACH = 1.3932 Q = 600.00 P = 441.59 RN/L = 2.3153

SECTION (1)LEFT WING TOP SURF DEPENDENT VARIABLE CP

2Y/BW	.2350	.2990	.3640	.4270	.5340	.6730	.7800	.8870	.9720	1.0000
X/CW										
.000	.0958	-.0720	-.2247	.2653	.6897	.7176	.7086	.5735	.0176	
.010		-.1537	-.2484		.1502	.2998	.2624	.1302		
.020		-.1427		.0000	.0373	.1304	.1300	.0660	-.2369	
.040			-.1952	-.1606						
.041	-.0193									
.040					-.1319	-.0838	-.0847	-.1110		
.060									-.2638	
.080					-.2595					
.081				-.2643						
.086			-.1277							
.094		-.1194								
.113	-.0373									
.150					-.4329	-.3766	-.3416	-.3067		
.157									-.4065	
.163			.0000							
.177				-.3943						
.223		-.1281								
.246			-.2776							
.247	-.0631									
.250					-.5194	-.4909	-.4580	-.4256		
.274				-.4332						
.345									-.4982	
.362		-.1199								
.390			-.3287							
.400					-.5902	-.5793		-.5405		
.402				-.4526						
.418										-.4029
.429	-.1146									
.497		-.2610								
.503									-.5188	
.547	-.1658									
.550					-.5718	-.6080				
.555				-.4280						
.600								-.5333		
.633	-.3087									
.637			-.3983							
.650							-.5717			
.670									-.5775	
.700		-.3582				-.5881				
.703										-.5897
.745					-.4063					
.747	-.3204									
.750							-.4836	-.4744		
.720				-.2560						
.775					-.5452	-.4271				

AMES 11-073(OA148) -140A/B/C ORB LEFT WING TOP (XEBU76)

ALPHA (4) = 7.887 BETA (1) = -3.866

SECTION (1)LEFT WING TOP SURF DEPENDENT VARIABLE CP

2Y/BW	.2350	.2990	.3640	.4270	.5340	.6730	.7800	.8870	.9720	1.0000
X/CW										
.793	-.2942									
.799			-.1985							
.818				-.4141						
.834		-.1369								
.839			-.3859							
.850					-.3241	-.4255	-.4791			
.857				-.4150						
.862									-.5526	
.868		-.3407								
.879			-.3263							
.900		-.2052			-.2835			-.4898		
.905				-.3248						
.919			-.2436							
.950					-.2460	-.3584	-.4579			
.953				-.2422						
.946			-.2232							
.905		-.2130								

ALPHA (4) = 7.364 BETA (2) = .189 MACH = 1.3932 Q = 600.00 P = 441.59 RN/L = 2.9153

SECTION (1)LEFT WING TOP SURF DEPENDENT VARIABLE CP

2Y/BW	.2350	.2990	.3640	.4270	.5340	.6730	.7800	.8670	.9720	1.0000
X/CW										
.000	.0366	-.2291	-.4484	.0518	.5384	.5817	.5870	.5445	-.1485	
.010		-.3066	-.4006		-.0125	.1421	.1189	.0014		
.020		-.2839		.0000	-.1168	-.0045	.0051	-.0527	-.3584	
.040			-.3293	-.3014						
.041	-.0656									
.050					-.2607	-.1943	-.1795	-.2070		
.069									-.3639	
.080					-.3621					
.081				3566						
.086			-.2359							
.094		-.1882								
.113	-.1031									
.130					-.4937	-.4312	-.3957	-.3653		
.157									-.4640	
.163			.0000							
.177				-.4419						
.229		-.1891								
.245			-.2768							
.247	-.1227									
.250					-.5420	-.5212	-.4936	-.4657		

AMES 11-073(OA148) -140A/B/C ORB LEFT WING TOP (XEB078)

ALPHA (4) = 7.954 BETA (2) = .189

SECTION : LEFT WING TOP SUP DEPENDENT VARIABLE CP

X/CW \ Y/BW	.2150	.2990	.3840	.4270	.5340	.6730	.7800	.8870	.9720	1.0000
.274				-.3712						
.345										
.362		-.1518							-.5320	
.390			-.3093							
.400					-.5487	-.5934		-.5644		
.402				-.4128						
.416										
.429	-.1720									-.5482
.497		-.2712								
.503										
.547	-.1017								-.5613	
.550					-.4764	-.5996				
.565				-.4065						
.600										
.633	-.3118							-.5316		
.637			-.3970							
.650							-.5588			
.670										
.700		-.3569				-.5320			-.5359	
.723										
.725					-.2708					-.5038
.727	-.3088									
.750							-.4544	-.4602		
.750				-.2030						
.775					-.4315	-.4774				
.793	-.1183									
.798			-.1768							
.808				-.3965						
.834		-.0493								
.839			-.3674							
.850					-.4019	-.4530	-.4750			
.857				-.3942						
.862										
.865		-.3437							-.5399	
.879			-.3353							
.900		-.2245			-.3496			-.5009		
.905				-.3719						
.919			-.2665							
.950					-.2578	-.3744	-.4694			
.953				-.3298						
.955			-.2461							
.965		-.2918								

AMES 11-073(OA148) -1[illegible]0A/9/C [illegible]098 LEFT WING TOP (XEBU'S)

ALPHA (4) = 7.361 BETA (3) = 4.247 MACH = 1.3[illegible]2 Q = 600.00 P = 44[illegible].53 RN/L = 2.9133

SECTION (1)LEFT WING TOP SURF DEPEN[illegible]NT VARIAB[illegible] CP

2Y/BW	.2350	.2990	.3640	.4270	.5340	[illegible]	[illegible].820	.8870	.9720	1.00[illegible]
X/CW										
.000	-.0164	-.4102	-.4202	-.1528	.365[illegible]	[illegible]	.4506	.4063	-.3168	
.010		-.3874	-.4188		-.17[illegible]	[illegible]	-.0190	-.1207		
.020		-.3884		.0000	-.26[illegible]	[illegible]	-.1169	-.167[illegible]	-.4668	
.040			-.4051	-.3231						
.041	-.1138									
.050					-.[illegible]		-.2676	-.3010		
.059									-.4938	
.080					-.[illegible]					
.081				-.3038						
.086			-.3800							
.094		-.3788								
.113	-.1588									
.150					-.[illegible]	-.[illegible]43	-.4434	-.4212		
.157									-.5271	
.163			.0000							
.177				-.3198						
.229		-.2093								
.246			-.4332							
.247	-.1815									
.250					-.4840	-.5488	-.5253	-.5026		
.274				-.3398						
.345									-.5465	
.362		-.1128								
.390			-.2820							
.400					-.4535	-.6031		-.5855		
.402				-.3915						
.418										-.5471
.429	-.1643									
.497		-.2421								
.503									-.5508	
.547	-.1425									
.550					-.4461	-.5911				
.565				-.4175						
.600								-.5815		
.633	-.3015									
.637			-.3796							
.650							-.5737			
.670									-.5289	
.700		-.3333				-.5059				
.723										-.5038
.725					-.2831					
.727	-.3039									
.750							-.4913	-.4885		
.760				-.1676						
.775					-.4483	-.5084				

AMES 11-073(OA148) -140A/B/C ORB LEFT WING TOP (XEBU78)

ALPHA (4) = 7.961 BETA (3) = 4.247

SECTION (1)LEFT WING TOP SURF DEPENDENT VARIABLE CP

2Y/BW	.2350	.2990	.3640	.4270	.5340	.6730	.7800	.8870	.9720	1.0000
X/CW										
.793	.0112									
.798			-.1421							
.808				-.3819						
.834		-.1083								
.839			-.3827							
.850					-.4101	-.3145	-.4889			
.857				-.3836						
.862									-.5163	
.865		-.3793								
.879			-.3150							
.900		-.2711			-.3769			-.4732		
.905				-.3664						
.919			-.2476							
.950					-.3087	- 2592	-.4509			
.953				-.3310						
.955			-.2863							
.965		-.3750								

ALPHA (5) = 11.871 BETA (1) = -3.849 MACH = 1.3930 Q = 600.10 P = 441.82 RN/L = 2.9227

SECTION (1)LEFT WING TOP SURF DEPENDENT VARIABLE CP

2Y/BW	.2350	.2990	.3640	.4270	.5340	.6730	.7800	.8870	.9720	1.0000
X/CW										
.000	.0230	-.2500	-.3820	.1019	.5973	.6399	.6346	.5745	-.1850	
.010		-.2971	-.3420		-.0424	.1100	.0492	-.0858		
.020		-.2873		.0000	-.1519	-.0422	-.0712	-.1404	-.5052	
.040			-.2835	-.3364						
.041	-.0114									
.050					-.3021	-.2343	-.2431	-.2886		
.069									-.5035	
.080					-.4019					
.081				-.3973						
.086			-.2125							
.094		-.2062								
.113	-.0466									
.150					-.5296	-.4770	-.4462	-.4313		
.157									-.5655	
.163			.0000							
.177				-.4843						
.229		-.1799								
.245			-.2994							
.247	-.0619									
.250					-.5924	-.5625	-.5381	-.5122		

AMES 11-073(OA148) -140A/B/C ORB LEFT WING TOP (XEBU76)

ALPHA (5) = 11.871 BETA (1) = -3.849

SECTION (1)LEFT WING TOP SURF DEPENDENT VARIABLE CP

2Y/BW	.2350	.2990	.3640	.4270	.5340	.6730	.7800	.8870	.9720	1.0000
X/CW										
.274				-.4792						
.345									-.6098	
.362		-.1584								
.390			-.3824							
.400					-.5994	-.5604		-.5824		
.402				-.5053						
.418										-.5807
.429	-.1387									
.497		-.3662								
.503									-.6057	
.547	-.2030									
.550					-.5672	-.5690				
.565				-.5067						
.600								-.5582		
.633	-.4084									
.637			-.4878							
.650							-.5678			
.670									-.5746	
.700		-.4734				-.5347				
.723										-.5320
.725					-.5200					
.727	-.4162									
.750							-.4945	-.5118		
.760				-.3178						
.775					-.4926	-.4730				
.793	-.3772									
.798			-.2395							
.808				-.4912						
.834		-.2055								
.839			-.4553							
.850					-.4504	-.4538	-.5027			
.857				-.4736						
.862									-.5588	
.865		-.3942								
.879			-.2576							
.900		-.2414			-.4213			-.5589		
.905				-.3604						
.919			-.3146							
.950					-.3762	-.3930	-.4795			
.953				-.2552						
.955			-.3222							
.965		-.3620								

AMES 11-073(OA148) -140A/B/C ORB LEFT WING TOP (XEBU78)

ALPHA (5) = 11.913 BETA (2) = .191 MACH = 1.3930 Q = 600.10 P = 441.82 RN/L = 2.9227

SECTION (1)LEFT WING TOP SURF DEPENDENT VARIABLE CP

2Y/BW	.2350	.2990	.3640	.4270	.5340	.6730	.7800	.8870	.9720	1.0000
X/CW										
.000	-.0639	-.3733	-.3742	-.1072	.4232	.4814	.4782	.4131	-.3567	
.010		-.3220	-.3701		-.1905	-.0382	-.0963	-.2140		
.020		-.3160		.0000	-.2894	-.1784	-.2048	-.2667	-.6022	
.040			-.3586	-.3854						
.041	-.0854									
.050					-.4126	-.3402	-.3462	-.3871		
.069									-.5935	
.080					-.4923					
.081				-.4194						
.086			-.3280							
.094		-.3615								
.113	-.1326									
.150					-.5893	-.5370	-.5077	-.4978		
.157									-.6007	
.163			.0000							
.177				-.4395						
.229		-.4329								
.246			-.4025							
.247	-.1134									
.250					-.6359	-.6062	-.5824	-.5835		
.274				-.4727						
.345									-.6094	
.362		-.2952								
.390			-.4142							
.400					-.6263	-.6221		-.6007		
.402				-.5078						
.418										-.6297
.429	-.2019									
.497		-.4183								
.503									-.5971	
.547	-.2804									
.550					-.6232	-.6338				
.565				-.4935						
.600								-.5889		
.633	-.4177									
.637			-.5028							
.650							-.5894			
.670									-.5624	
.700		-.4351				-.5823				
.723										-.5209
.725					-.5178					
.727	-.4024									
.750							-.5268	-.5156		
.760				-.2483						
.775					-.5709	-.5449				

AMES 11-073(OA148) -140A/B/C ORB LEFT WING TOP (XE8U76)

ALPHA (5) = 11.913 BETA (2) = .191

SECTION (1)LEFT WING TOP SURF DEPENDENT VARIABLE CP

2Y/BW	.2350	.2990	.3640	.4270	.5340	.6730	.7800	.8870	.9720	1.0000
X/CW										
.793	-.1936									
.798			-.2037							
.808				-.4588						
.834		-.1733								
.839			-.4420							
.850					-.5442	-.4763	-.5357			
.857				-.4614						
.862									-.5614	
.865		-.3826								
.879			-.3688							
.900		-.3009			-.4239			-.5681		
.905				-.4270						
.919			-.3279							
.950					-.2292	-.4032	-.4695			
.953				-.4353						
.955			-.3568							
.965		-.4056								

ALPHA (5) = 11.908 BETA (3) = 4.262 MACH = 1.3930 Q = 600.10 P = 441.82 RN/L = 2.9227

SECTION (1)LEFT WING TOP SURF DEPENDENT VARIABLE CP

2Y/BW	.2350	.2990	.3640	.4270	.5340	.6730	.7800	.8870	.9720	1.0000
X/CW										
.000	-.1506	-.3975	-.4172	-.3185	.2413	.3035	.2990	.2312	-.4768	
.010		-.3899	-.4160		-.3309	-.1863	-.2353	-.3491		
.020		-.3904		.0000	-.4079	-.3126	-.3320	-.3912	-.5872	
.040			-.4239	-.4002						
.041	-.1791									
.050					-.5033	-.4369	-.4439	-.4817		
.069									-.5851	
.080					-.5630					
.081				-.4272						
.086			-.3945							
.094		-.4509								
.113	-.1661									
.150					-.5904	-.5907	-.5629	-.5614		
.157									-.5848	
.163			.0000							
.177				-.4298						
.229		-.5460								
.246			-.4331							
.247	-.2001									
.250					-.5872	-.6429	-.6198	-.6074		

AMES 11-073(OA148) -140A/B/C ORB LEFT WING TOP (XEBU76)

ALPHA (5) = 11.909 BETA (3) = 4.262

SECTION (1)LEFT WING TOP SURF DEPENDENT VARIABLE CP

2Y/BW	.2350	.2990	.3640	.4270	.5340	.6730	.7800	.8870	.9720	1.0000
X/CW										
.274				-.4188						
.345										
.362		-.3956							-.5913	
.390			-.4238							
.400										
.402					-.6155	-.6357		-.6048		
.418				-.4750						
.429	-.2820									-.5921
.497		-.3753								
.503										
.547	-.2418								-.6038	
.550										
.565					-.5450	-.6352				
.600				-.4934						
.633	-.3884							-.5752		
.637			-.4735							
.650										
.670							-.6102			
.700		-.3784							-.5422	
.723						-.5799				
.725										-.5344
.727	-.3730				-.2750					
.750										
.760							-.5820	-.5571		
.775				-.2599						
.793	-.0617				-.4662	-.5270				
.798										
.808			-.2203							
.834		-.1778		-.4623						
.839										
.850			-.4524							
.857					-.4609	-.4319	-.5160			
.862				-.4635						
.865		-.3999							-.5338	
.873			-.3461							
.900		-.3420								
.905					-.4551			-.5188		
.919				-.4157						
.950			-.3384							
.953					-.3009	-.3071	-.4938			
.955				-.3843						
.965			-.3747							
		-.4495								

AMES 11-073(OA148) -140A/B/C ORB LEFT WING TOP (XEBU78)

ALPHA (6) = 15.905 BETA (1) = -3.830 MACH = 1.3921 Q = 600.28 P = 442.53 RN/L = 2.9209

SECTION (1)LEFT WING TOP SURF DEPENDENT VARIABLE CP

2Y/BW	.2350	.2990	.3640	.4270	.5340	.6730	.7800	.8870	.9720	1.0000
X/CW										
.000	-.0392	-.3366	-.3105	-.0278	.4855	.5234	.5133	.4145	-.3524	
.010		-.2947	-.3067		-.1929	-.0578	-.1385	-.2915		
.020		-.2900		.0000	-.2953	-.2093	-.2537	-.3382	-.6291	
.040			-.2906	-.3481						
.041	-.1679									
.050					-.4192	-.3632	-.3882	-.4430		
.069									-.6270	
.080					-.4993					
.081				-.3772						
.086			-.2574							
.094		-.3031								
.113	-.0483									
.150					-.5959	-.5537	-.5330	-.5417		
.157									-.6167	
.163			.0000							
.177				-.3999						
.229		-.3770								
.246			-.3724							
.247	-.0842									
.250					-.6086	-.61	-.6001	-.5915		
.274				-.4477						
.345									-.6334	
.362		-.3883								
.390			-.4134							
.400					-.6033	-.6114		-.6389		
.402				-.5201						
.418										-.6219
.429	-.1684									
.497		-.4930								
.503									-.6320	
.547	-.2621									
.550					-.6148	-.6169				
.565				-.5428						
.600								-.6029		
.633	-.4878									
.637			-.5392							
.650							-.6183			
.670									-.5707	
.700		-.5301				-.6021				
.723										-.5465
.725					-.5637					
.727	-.5402									
.750							-.5517	-.6104		
.760				-.3636						
.775					-.5491	-.5372				

AMES 11-073(OA148) -140A/B/C ORB LEFT WING TOP (XEBU76)

ALPHA (6) = 15.905 BETA (1) = -3.830

SECTION (1)LEFT WING TOP SURF DEPENDENT VARIABLE CP

2Y/BW	.2350	.2990	.3640	.4270	.5340	.6730	.7800	.8870	.9720	1.0000
X/CW										
.793	-.4079									
.798			-.3281							
.808				-.4826						
.834		-.2742								
.839			-.4823							
.850					-.5292	-.5341	-.5666			
.857				-.4564						
.862									-.5889	
.865		-.3567								
.879			-.4266							
.900		-.3419			-.5031			-.6106		
.905				-.4621						
.919			-.3969							
.950					-.4106	-.4417	-.5377			
.953				-.4555						
.955			-.4393							
.965		-.5300								

ALPHA (6) = 15.917 BETA (2) = .190 MACH = 1.3921 Q = 600.28 P = 442.53 RN/L = 2.9208

SECTION (1)LEFT WING TOP SURF DEPENDENT VARIABLE CP

2Y/BW	.2350	.2990	.3640	.4270	.5340	.6730	.7800	.8870	.9720	1.0000
X/CW										
.000	-.1467	-.3860	-.3729	-.2608	.3050	.3416	.3280	.2262	-.4697	
.010		-.3795	-.3719		-.3352	-.2055	-.2711	-.3971		
.020		-.3926		.0000	-.4136	-.3366	-.3702	-.4397	-.6172	
.040			-.3739	-.3797						
.041	-.3335									
.050					-.5093	-.4578	-.4808	-.5266		
.069									-.6160	
.080					-.5702					
.081				-.4225						
.086			-.3384							
.094		-.4039								
.113	-.1323									
.150					-.6208	-.6051	-.5909	-.5982		
.157									-.6184	
.163			.0000							
.177				-.4691						
.203		-.4475								
.245			-.4550							
.247	-.1955									
.250					-.6335	-.6538	-.6304	-.6312		

TABULATED PRESSURE DATA - OA148 (AMES 11-073-1)

AMES 11-073(OA148) -140A/B/C ORB LEFT WING TOP (XEBU78)

ALPHA (6) = 15.917 BETA (2) = .190

SECTION (1)LEFT WING TOP SURF DEPENDENT VARIABLE CP

2Y/BW	.2350	.2990	.3640	.4270	.5340	.6730	.7800	.8870	.9720	1.0000
X/CW										
.274				-.5105						
.345									-.6294	
.362		-.4846								
.390			-.4789							
.400					-.6411	-.6351		-.6238		
.402				-.5552						
.418										-.6476
.429	-.2735									
.497		-.5445								
.503									-.6440	
.547	-.3603									
.550					-.6383	-.6394				
.565				-.5471						
.600								-.5978		
.633	-.5142									
.637			-.5339							
.650							-.6125			
.670									-.5708	
.700		-.5126				-.6231				
.723										-.5568
.725					-.6028					
.727	-.5268									
.750							-.5688	-.5743		
.760				-.3627						
.775					-.5951	-.5740				
.793	-.3180									
.798			-.2692							
.808				-.5026						
.834		-.2222								
.839			-.4679							
.850					-.5397	-.5431	-.5864			
.857				-.5050						
.862									-.5839	
.865		-.3687								
.879			-.3924							
.900		-.3637			-.5277			-.5938		
.905				-.4853						
.919			-.4132							
.950					-.4158	-.4755	-.5036			
.953				-.5103						
.955			-.4586							
.965		-.4723								

AMES 11-073(OA148) -140A/B/C ORB LEFT WING TOP (XEBU78)

ALPHA (6) = 15.907 BETA (3) = 4.290 MACH = 1.3921 Q = 600.28 P = 442.53 RN/L = 2.9208

SECTION (1)LEFT WING TOP SURF DEPENDENT VARIABLE CP

2Y/BW	.2350	.2990	.3640	.4270	.5340	.6730	.7800	.8870	.9720	1.0000
X/CW										
.000	-.2418	-.4267	-.4446	-.4273	.1171	.1648	.1472	.0526	-.5467	
.010		-.4291	-.4467		-.4472	-.3335	-.3886	-.5063		
.020		-.4329		.0000	-.5159	-.4459	-.4723	-.5389	-.5875	
.040			-.4472	-.4190						
.041	-.4388									
.050					-.5854	-.5404	-.5561	-.5993		
.069									-.5884	
.080					-.6258					
.081				-.4419						
.086			-.4075							
.094		-.4586								
.113	-.2286									
.150					-.6313	-.6471	-.6359	-.6223		
.157									-.5920	
.163			.0000							
.177				-.5084						
.229		-.5017								
.246			-.5210							
.247	-.2744									
.250					-.6423	-.6464	-.6321	-.6086		
.274				-.5108						
.345									-.5999	
.362		-.5350								
.390			-.4791							
.400					-.6534	-.6411		-.6012		
.402				-.5125						
.418										-.6001
.429	-.3536									
.497		-.5173								
.503									-.6040	
.547	-.3811									
.550					-.6430	-.6430				
.565				-.5328						
.600								-.5718		
.633	-.4649									
.637			-.4873							
.650							-.6141			
.670									-.5422	
.700		-.4353				-.5884				
.723										-.5390
.725					-.4621					
.727	-.4406									
.750							-.5772	-.5432		
.760				-.3568						
.775					-.5605	-.5807				

DATE 11 FEB 76 TABULATED PRESSURE DATA - OA148 (AMES 11-073-1) (XEBU78)

AMES 11-073(OA148) -140A/B/C ORB LEFT WING TOP

ALPHA (5) = 15.907 BETA (3) = 4.290

SECTION ( )LEFT WING TOP SURF DEPENDENT VARIABLE CP

2Y/BW	.2350	.2990	.3840	.4270	.5340	.6730	.7800	.8870	.9720	1.0000
X/CW										
.793	-.2221									
.798			-.2699							
.808				-.5254						
.834		-.2185								
.839			-.4894							
.850					-.5667	-.5265	-.5585			
.857				-.4948					-.5402	
.862										
.865		-.3860								
.879			-.4035							
.900		-.3884			-.5677			-.5355		
.905				-.4761						
.919			-.3932							
.950					-.4595	-.4603	-.5346			
.953				-.4943						
.955			-.4355							
.965		-.4842								

AMES 11-073(OA148) -140A/B/C ORB LEFT WING TOP (XEBU77) (05 AUG 75)

REFERENCE DATA

SREF = 2690.0000 SQ.FT. XMRP = 1076.6800 IN. XO
LREF = 474.8000 IN. YMRP = .0000 IN. YO
BREF = 336.0890 IN. ZMRP = 375.0000 IN. ZO
SCALE = .0300

PARAMETRIC DATA

RUDDER = -10.000 SPOBRK = .000
BOFLAP = -11.700 L-ELVN = 10.000
R-ELVN = -10.000 MACH = 1.250

ALPHA (1) = -4.016 BETA (1) = -3.849 MACH = 1.2454 Q = 599.63 P = 552.28 RN/L = 3.0204

SECTION (1)LEFT WING TOP SURF DEPENDENT VARIABLE CP

2Y/BW	.2350	.2990	.3640	.4270	.5340	.6730	.7800	.8870	.9720	1.0000
X/CW										
.000	-.2050	-.0856	-.1165	.2705	.6691	.6064	.5635	.5866	-.4395	
.010		-.0324	-.0121		.7323	.7130	.6752	.5990		
.020		-.0355		.0000	.6524	.6074	.5849	.5554	-.0507	
.040			.0487	.4223						
.041	-.1006									
.050					.4418	.3962	.3784	.3699		
.069									-.1113	
.080					.2581					
.081				.3027						
.086			.1728							
.094		-.0068								
.113	-.0578									
.150					.0132	.0082	.0224	.0483		
.157									-.2521	
.163			.0000							
.177				.0995						
.229		.0500								
.246			.1002							
.247	-.0005									
.250					-.1329	-.1418	-.1331	-.1653		
.274				-.0447						
.345									-.2986	
.362		.1606								
.390			-.0249							
.400					-.2689	-.3177		-.3844		
.402				-.2106						
.418										-.5094
.429	.0512									
.497		.0150								
.503									-.3432	
.547	.0782									
.550					-.1967	-.3537				
.555				.0096						
.600								-.4428		
.633	-.0475									
.637			.1471							
.650							-.4340			
.670									-.5993	

AMES 11-073(OA148) -140A/B/C ORB LEFT WING TOP (XEBU77)

ALPHA (1) = -4.016 BETA (1) = -3.849

SECTION (1)LEFT WING TOP SURF DEPENDENT VARIABLE CP

2Y/BW	.2350	.2990	.3640	.4270	.5340	.6730	.7800	.8870	.9720	1.0000
X/CW										
.700		.1175				-.1169				
.723										-.3873
.725					.0662					
.727	-.0676									
.750							-.6112	-.6406		
.760				.0526						
.775					-.2564	-.2916				
.793	.3509									
.798			.0607							
.808				-.2606						
.834		.0909								
.839			-.2598							
.850					-.2437	-.2147	-.372[illegible]			
.857				-.2749						
.862									-.5267	
.865		-.3278								
.879			-.2526							
.900		-.1863			-.2741			-.3226		
.905				-.2723						
.919			-.2274							
.950					-.2543	-.1801	-.1499			
.953				-.2294						
.955			-.2258							
.965		-.2251								

ALPHA (1) = -4.011 BETA (2) = .188 MACH = 1.2454 Q = 599.83 [illegible] = 552.28 RN/L = 3.0204

SECTION (1)LEFT WING TOP SURF DEPENDENT VARIABLE CP

2Y/BW	.2350	.2990	.3640	.4270	.5340	.6730	.7800	.8870	.9720	1.0000
X/CW										
.000	-.2208	-.0830	-.0720	.2357	.6007	.5183	.4686	.4875	-.5197	
.010		-.0698	-.0118		.6584	.6307	.5910	.5225		
.020		-.0823		.0000	.5825	.5331	.5118	.4841	- 1357	
.040			.0290	.3547						
.041	-.1724									
.050					.3944	.3474	.3209	.3179		
.069									-.1	
.080					.2259					
.081				.2522						
.086			.1330							
.094		-.0286								
.113	-.1204									
.130					.0119	-.0077	.001[illegible]	.0285		

AMES :1-073(OA148) -140A/B/C ORB LEFT WING TOP (XE8U77)

ALPHA (1) = -4.011 BETA (2) = .186

SECTION (1)LEFT WING TOP SURF DEPENDENT VARIABLE CP

2Y/BW	.2350	.2990	.3640	.4270	.5340	.6730	.7800	.8870	.9720	1.0000
X/CW										
.157									-.3114	
.163			.0000							
.177				.0915						
.229		.0266								
.246			.0767							
.247	-.0243									
.250					-.1239	-.1569	-.1546	-.1756		
.274				-.0397						
.345									-.3354	
.362		.1380								
.390			-.0311							
.400					-.2545	-.3049		-.3967		
.402				-.1948						
.418										-.5916
.429	.0321									
.497		-.0056								
.503									-.3668	
.547	.0561									
.550					.0107	-.3356				
.565				.1217						
.500								-.4416		
.633	-.0545									
.637			.1979							
.650							-.3594			
.670									-.6034	
.700		.1915				-.0241				
.723										-.4439
.725					.0834					
.727	.0987									
.750							-.3954	-.6474		
.760				.0348						
.775					-.2727	-.2881				
.793	.3442									
.798			.0347							
.808				-.2944						
.834		.0592								
.839			-.3031							
.850					-.2739	-.2111	-.3234			
.857				-.3086						
.862									-.2936	
.865		-.3517								
.879			-.2906							
.900		-.2170			-.3006			-.3150		
.905				-.3075						
.919			-.2559							

AMES 11-073(OA148) -140A/B/C ORB LEFT WING TOP (XE8U77)

ALPHA (1) = -4.011 BETA (2) = .186

SECTION (1)LEFT WING TOP SURF DEPENDENT VARIABLE CP

2Y/BW	.2350	.2990	.3640	.4270	.5340	.6730	.7800	.8870	.9720	1.0000
X/CW										
.950					-.2936	-.2169	-.2024			
.953				-.2667						
.955			-.2499							
.965		-.2555								

ALPHA (1) = -4.020 BETA (3) = 4.275 MACH = 1.2454 Q = 599.63 P = 552.28 RN/L = 3.0204

SECTION (1)LEFT WING TOP SURF DEPENDENT VARIABLE CP

2Y/BW	.2350	.2990	.3640	.4270	.5340	.6730	.7800	.8870	.9720	1.0000
X/CW										
.000	-.2106	-.1035	-.0432	.2563	.5374	.4357	.3815	.3919	-.5737	
.010		-.1131	-.0037		.5816	.5460	.5048	.4415		
.020		-.1275		.0000	.5780	.4599	.4336	.4089	-.2194	
.040			.0263	.3121						
.041	-.2197									
.050					.3466	.2845	.2645	.2535		
.069									-.2492	
.080					.1898					
.081				.2196						
.086			.1158							
.094		-.0380								
.113	-.1691									
.150					-.0051	-.0333	-.0211	-.0004		
.157									-.3643	
.163			.0000							
.177				.0788						
.229		.0131								
.246			.0763							
.247	-.0216									
.250					-.1321	-.1737	-.1858	-.2079		
.274				-.0457						
.345									-.3737	
.362		.1410								
.390			-.0383							
.400					-.2509	-.2963		-.4028		
.402				-.1985						
.418										-.6339
.429	.0366									
.497		-.0272								
.503									-.3329	
.547	.0515									
.550					.0693	-.0501				
.565				.1674						

AMES 11-073(OA148) -140A/B/C ORB LEFT WING TOP (XEBU77)

ALPHA (1) = -4.020 BETA (3) = 4.275

SECTION (1)LEFT WING TOP SURF DEPENDENT VARIABLE CP

2Y/BW	.2350	.2990	.3640	.4270	.5340	.6730	.7800	.8870	.9720	1.0000
X/CW										
.600								-.4313		
.633	-.0739									
.637			.2166							
.650							-.0971			
.670									-.3406	
.700		.2117				.0281				
.723										-.3394
.725					.0748					
.727	.1264									
.750							-.3491	-.4256		
.760				.0166						
.775					-.2900	-.3001				
.793	.3429									
.798			.0187							
.808				-.3170						
.834		.0412								
.839			-.3213							
.850					-.3035	-.2241	-.3330			
.857				-.3312						
.862									-.2283	
.865		-.3681								
.879			-.3177							
.900		-.2433			-.3234			-.2172		
.905				-.3375						
.919			-.2741							
.950					-.3186	-.2459	-.2340			
.953				-.2909						
.955			-.2676							
.965		-.2679								

ALPHA (2) = .012 BETA (1) = -3.863 MACH = 1.2451 Q = 599.58 P = 552.51 RN/L = 3.0183

SECTION (1)LEFT WING TOP SURF DEPENDENT VARIABLE CP

2Y/BW	.2350	.2990	.3640	.4270	.5340	.6730	.7800	.8870	.9720	1.0000
X/CW										
.000	-.0886	.0085	-.0054	.4254	.7250	.6710	.6412	.6517	-.2433	
.010		-.0035	.0210		.5777	.6060	.5711	.4725		
.020		-.0332		.0000	.4735	.4583	.4470	.4165	-.0548	
.040			.0487	.2501						
.041	-.0881									
.050					.2365	.2081	.2003	.2029		
.059									-.1353	
.080					.0429					

AMES 11-073(OA148) -140A/B/C ORB LEFT WING TOP (XEBU77)

ALPHA (2) = .012 BETA (1) = -3.863

SECTION (1)LEFT WING TOP SURF DEPENDENT VARIABLE CP

2Y/BW	.2350	.2990	.3640	.4270	.5340	.6730	.7800	.8870	.9720	1.0000
X/CW										
.081				.1226						
.086			.1129							
.094		-.0245								
.113	-.0656									
.150					-.1641	-.1534	-.1408	-.1098		
.157									-.3188	
.163			.0000							
.177				-.0718						
.229		-.0135								
.246			-.0229							
.247	-.0804									
.250					-.2762	-.3241	-.3163	-.3038		
.274				-.1925						
.345									-.3804	
.362		.0837								
.390			-.1531							
.400					-.3836	-.4525		-.5006		
.402				-.3307						
.418										-.2528
.429	.0076									
.497		-.0930								
.503									-.4388	
.547	-.0049									
.550					-.4073	-.4923				
.565				-.3118						
.600								-.5190		
.633	-.1517									
.637			-.1691							
.650							-.5254			
.670									-.4285	
.700		-.2084				-.4252				
.723										-.3737
.725					-.1152					
.727	-.2154									
.750							-.4844	-.4242		
.760				-.0409						
.775					-.3249	-.3950				
.793	.1725									
.798			-.0154							
.808				-.2580						
.834		.0322								
.839			-.2851							
.850					-.2750	-.2368	-.4279			
.857				-.2734						
.862									-.4093	

AMES 11-073(OA148) -140A/B/C ORB LEFT WING TOP (XEBU77)

ALPHA (2) = .012 BETA (1) = -3.863

SECTION (1)LEFT WING TOP SURF DEPENDENT VARIABLE CP

2Y/BW	.2350	.2990	.3640	.4270	.5340	.6730	.7800	.8870	.9720	1.0000
X/CW										
.865		-.3506								
.879			-.2653							
.900		-.1967			-.2841			-.3924		
.905				-.2715						
.919			-.2218							
.950					-.2264	-.1867	-.3689			
.953				-.2380						
.955			-.2206							
.965		-.2366								

ALPHA (2) = .014 BETA (2) = .176 MACH = 1.2451 Q = 599.58 P = 552.51 RN/L = 3.0183

SECTION (1)LEFT WING TOP SURF DEPENDENT VARIABLE CP

2Y/BW	.2350	.2990	.3640	.4270	.5340	.6730	.7800	.8870	.9720	1.0000
X/CW										
.000	-.1105	-.0626	-.0296	.3732	.6492	.5888	.5501	.5543	-.3016	
.010		-.0937	-.0088		.4935	.5233	.4858	.3925		
.020		-.1192		.0000	.3929	.3828	.3673	.3433	-.1308	
.040			.0140	.1789						
.041	-.1565									
.050					.185[illegible]	.1540	.1494	.1437		
.069									-.2027	
.080					.0076					
.081				.0732						
.086			.0703							
.094		-.1441								
.113	-.1383									
.150					-.1778	-.[illegible]28	-.1740	-.1409		
.157									-.3598	
.163			.0000							
.177				-.0780						
.229		-.0239								
.246			-.0420							
.247	-.1227									
.250					-.2767	-.3261	-.3321	-.3267		
.274				-.1843						
.345									-.4037	
.352		.0665								
.390			-.1510							
.400					-.3739	-.4514		-.5110		
.402				-.3291						
.418										-.1777
.429	-.0083									

AMES 11-073(OA148) -140A/B/C ORB LEFT WING TOP (XEBU77)

ALPHA (2) = .014 BETA (2) = .176

SECTION (1)LEFT WING TOP SURF DEPENDENT VARIABLE CP

2Y/BW	.2350	.2990	.3640	.4270	.5340	.6730	.7800	.8870	.9720	1.0000
X/CW										
.497		-.1141								
.503									-.4395	
.547	-.0189									
.550					-.3825	-.4711				
.565				-.2330						
.600								-.5272		
.633	-.1601									
.637			-.0406							
.650							-.5399			
.670									-.4025	
.700		-.0820				-.2279				
.723										-.5184
.725					-.0857					
.727	-.1901									
.750							-.5775	-.4308		
.760				-.0499						
.775					-.3165	-.3758				
.793	.2133									
.798			-.0305							
.808				-.3032						
.834		-.0055								
.839			-.3312							
.850					-.2868	-.2390	-.4079			
.857				-.3183						
.862									-.3651	
.865		-.3871								
.879			-.3005							
.900		-.2382			-.3105			-.3809		
.905				-.3084						
.919			-.2543							
.950					-.2935	-.2265	-.3083			
.953				-.2644						
.955			-.2462							
.965		-.2632								

AMES 11-073(OA149) -140A/B/C ORB LEFT WING TOP (XEBU77)

ALPHA (2) = .026 BETA (3) = 4.255 MACH = 1.2451 Q = 599.58 P = 552.51 RN/L = 3.0183

SECTION (1)LEFT WING TOP SURF DEPENDENT VARIABLE CP

2Y/BW	.2350	.2990	.3640	.4270	.5340	.6730	.7800	.8870	.9720	1.0000
X/CW										
.000	-.1139	-.1593	-.0852	.3305	.5813	.5049	.4608	.4643	-.2154	
.010		-.1957	-.0584		.4085	.4285	.3851	.2988		
.020		-.2014		.0000	.3189	.2998	.2784	.2507	-.1785	
.040			-.0200	.1368						
.041	-.2013									
.050					.1307	.0962	.0806	.0725		
.069									-.2417	
.080					-.0217					
.081				.0483						
.086			.0411							
.094		-.1552								
.113	-.1970									
.150					-.1828	-.2165	-.2148	-.1805		
.157									-.3884	
.163			.0000							
.177				-.0659						
.229		-.0387								
.246			-.0359							
.247	-.1249									
.250					-.2774	-.3316	-.3471	-.3523		
.274				-.1724						
.345									-.4119	
.362		.0626								
.390			-.1482							
.400					-.3656	-.4424		-.5206		
.402				-.3210						
.418										-.2125
.429	-.0027									
.497		-.1147								
.503									-.4449	
.547	-.0195									
.550					-.2561	-.4551				
.565				-.1001						
.600								-.5412		
.633	-.1756									
.637			.0052							
.650							-.5223			
.670									-.4409	
.700		-.0141				-.1971				
.723										-.5525
.725					-.0473					
.727	-.1355									
.750							-.5857	-.4344		
.760				-.0494						
.775					-.3213	-.3481				

AMES 11-073(OA148) -140A/B/C ORB LEFT WING TOP (XEBU77)

ALPHA (2) = .026 BETA (3) = 4.255

SECTION (1)LEFT WING TOP SURF DEPENDENT VARIABLE CP

2Y/BW	.2350	.2990	.3640	.4270	.5340	.6730	.7800	.8870	.9720	1.0000
X/CW										
.793	.2162									
.798			-.0388							
.808				-.3351						
.834		-.0203								
.839			-.3497							
.850					-.3107	-.2251	-.3293			
.857				-.3507						
.862									-.4171	
.865		-.4056								
.879			-.3229							
.900		-.2633			-.3344			-.3640		
.905				-.3347						
.919			-.2789							
.950					-.3340	-.2628	-.2186			
.953				-.2911						
.955			-.2729							
.965		-.2870								

ALPHA (3) = 3.987 BETA (1) = -3.868 MACH = 1.2451 Q = 599.58 P = 552.51 RN/L = 3.0187

SECTION (1)LEFT WING TOP SURF DEPENDENT VARIABLE CP

2Y/BW	.2350	.2990	.3640	.4270	.5340	.6730	.7800	.8870	.9720	1.0000
X/CW										
.000	.0010	-.0038	-.1180	.4065	.7361	.7129	.6904	.6740	.0494	
.010		-.0617	-.1269		.3497	.4453	.4060	.2756		
.020		-.0831		.0000	.2338	.2650	.2543	.2116	-.1313	
.040			-.0903	.0326						
.041	-.0739									
.050					.0154	.0189	.0101	-.0081		
.069									-.1869	
.080					-.1565					
.081				-.0920						
.086			-.0227							
.094		-.1415								
.113	-.0732									
.150					-.3562	-.3413	-.3031	-.2606		
.157									-.3896	
.153			.0000							
.177				-.2332						
.229		-.1104								
.245			-.1415							
.247	-.1007									
.250					-.4519	-.4821	-.4596	-.428[illegible]		

AMES 11-073(OA148) -140A/B/C ORB LEFT WING TOP (XEBU77)

ALPHA (3) = 3.987 BETA (1) = -3.868

SECTION (1)LEFT WING TOP SURF DEPENDENT VARIABLE CP

2Y/BW	.2350	.2990	.3640	.4270	.5340	.6730	.7800	.8870	.9720	1.0000
X/CW										
.274				-.3297						
.345									-.4727	
.362		-.0002								
.390			-.2645							
.400					-.5080	-.5941		-.5927		
.402				-.4294						
.418										-.2302
.429	-.0502									
.497		-.1861								
.503									-.5223	
.547	-.0761									
.550					-.5137	-.6231				
.565				-.4095						
.600								-.6098		
.633	-.2516									
.637			-.3588							
.650							-.6177			
.670									-.6604	
.700		-.3351				-.5977				
.723										-.6815
.725					-.2281					
.727	-.3049									
.750							-.4984	-.5038		
.760				-.1524						
.775					-.4311	-.5624				
.793	-.0074									
.798			-.1147							
.808				-.3154						
.834		-.0258								
.839			-.3045							
.850					-.3533	-.3207	-.4943			
.857				-.3154						
.862									-.6177	
.865		-.3631								
.879			-.2741							
.900		-.2055			-.3188			-.4798		
.905				-.2949						
.919			-.2315							
.950					-.2314	-.2159	-.4655			
.953				-.2546						
.955			-.2294							
.965		-.2443								

AMES 11-073(OA148) -140A/B/C ORB LEFT WING TOP (XEBU77)

ALPHA (3) = 3.988 BETA (2) = .182 MACH = 1.2451 Q = 599.58 P = 552.51 RN/L = 3.0187

SECTION (1)LEFT WING TOP SURF DEPENDENT VARIABLE CP

2Y/BW	.2350	.2930	.3640	.4270	.5340	.6730	.7800	.8870	.9720	1.0000
X/CW										
.000	-.0379	-.1530	-.3011	.2852	.6449	.6266	.6044	.5830	-.0286	
.010		-.2112	-.2465		.2353	.3470	.3094	.1865		
.020		-.2031		.0000	.1478	.1837	.1712	.1169	-.2086	
.040			-.1429	-.0337						
.041	-.1427									
.050					-.0372	-.0374	-.0519	-.0739		
.069									-.2532	
.080					-.1886					
.081				-.1353						
.086			-.0595							
.094		-.2124								
.113	-.1513									
.150					-.3590	-.3675	-.3350	-.2993		
.157									-.4326	
.163			.0000							
.177				-.2281						
.229		-.1019								
.246			-.1447							
.247	-.1616									
.250					-.4371	-.4940	-.4789	-.4551		
.274				-.3093						
.345									-.4979	
.362		-.0110								
.390			-.2492							
.400					-.4824	-.5838		-.6078		
.402				-.4176						
.418										-.3745
.429	-.0552									
.497		-.1973								
.503									-.5509	
.547	-.0919									
.550					-.4980	-.5987				
.565				-.3893						
.600								-.6242		
.633	-.2695									
.637			-.2787							
.650							-.6183			
.670									-.6430	
.700		-.3304				-.4378				
.723										-.6378
.725					-.2320					
.727	-.2990									
.750							-.5509	-.5086		
.750				-.1392						
.775					-.4422	-.3836				

AMES 11-073(OA148) -140A/B/C ORB LEFT WING TOP (XEBU77)

ALPHA (3) = 3.988 BETA (2) = .182

SECTION (1)LEFT WING TOP SURF DEPENDENT VARIABLE CP

2Y/BW	.2350	.2990	.3640	.4270	.5340	.6730	.7800	.8870	.9720	1.0000
X/CW										
.793	.1211									
.798			-.0980							
.803				-.3558						
.834		-.0386								
.839			-.3685							
.850					-.3427	-.2451	-.5077			
.857				-.3484						
.862									-.6173	
.865		-.4193								
.879			-.3230							
.900		-.2608			-.2929			-.4635		
.905				-.3333						
.919			-.2665							
.950					-.2306	-.2086	-.4213			
.953				-.2880						
.955			-.2631							
.965		-.2916								

ALPHA (3) = 3.988 BETA (3) = 4.246 MACH = 1.2451 Q = 599.58 P = 552.51 RN/L = 3.0187

SECTION (1)LEFT WING TOP SURF DEPENDENT VARIABLE CP

2Y/BW	.2350	.2990	.3640	.4270	.5340	.6730	.7800	.8870	.9720	1.0000
X/CW										
.000	-.0628	-.3302	-.3636	.1540	.5506	.5293	.5111	.4792	-.1368	
.010		-.3717	-.2629		.1359	.2317	.1921	.0572		
.020		-.3338		.0000	.0613	.0846	.0695	.0037	-.3102	
.040			-.2114	-.0756						
.041	-.1854									
.050					-.0923	-.1067	-.1292	-.1608		
.069									-.3375	
.080					-.2152					
.081				-.1418						
.086			-.1836							
.094		-.2795								
.113	-.2086									
.150					-.3573	-.4001	-.3794	-.3551		
.157									-.4769	
.163			.0000							
.177				-.2232						
.229		-.1132								
.245			-.1241							
.247	-.2089									
.250					-.4149	-.5028	-.5048	-.4916		

AMES 11-073(OA148) -140A/B/C ORB LEFT WING TOP (XEBU77)

ALPHA (3) = 3.988 BETA (3) = 4.246

SECTION (1)LEFT WING TOP SURF DEPENDENT VARIABLE CP

2Y/BW	.2350	.2990	.3640	.4270	.5340	.6730	.7800	.8870	.9720	1.0000
X/CW										
.274				-.2884						
.345									-.5438	
.362		-.0019								
.390			-.2324							
.400					-.4714	-.5760		-.6255		
.402				-.4025						
.418										-.6057
.429	-.0494									
.497		-.1975								
.503									-.5762	
.547	-.0798									
.550					-.4717	-.5676				
.565				-.3392						
.600								-.6244		
.633	-.2739									
.637			-.2319							
.650							-.6166			
.670									-.5788	
.700		-.3069				-.3046				
.723										-.5784
.725					-.1960					
.727	-.2937									
.750							-.6478	-.5336		
.760				-.1108						
.775					-.4189	-.4341				
.793	.1411									
.798			-.0898							
.808				-.3618						
.834		-.0592								
.839			-.3805							
.850					-.2628	-.2889	-.5027			
.857				-.3773						
.862									-.5752	
.865		-.4508								
.879			-.3596							
.900		-.2805			-.3631			-.4674		
.905				-.3657						
.919			-.2870							
.950					-.3144	-.2174	-.3659			
.953				-.3227						
.955			-.2913							
.965		-.3711								

AMES 11-073(OA148) -140A/B/C ORB LEFT WING TOP (XEBU77)

ALPHA (4) = 7.974 BETA (1) = -3.859 MACH = 1.2449 Q = 599.64 P = 552.75 RN/L = 3.0238

SECTION (1)LEFT WING TOP SURF DEPENDENT VARIABLE CP

2Y/BW	.2350	.2990	.3640	.4270	.5340	.6730	.7800	.8870	.9720	1.0000
X/CW										
.000	.0555	-.1235	-.3593	.2129	.6416	.6664	.6688	.6175	-.0917	
.010		-.2165	-.3741		.0351	.1897	.1484	-.0019		
.020		-.2024		.0000	-.0808	.0129	.0094	-.0718	-.3992	
.040			-.2766	-.2523						
.041	-.0729									
.050					-.2541	-.2044	-.2118	-.2559		
.069									-.4164	
.080					-.3884					
.081				-.3730						
.086			-.1990							
.094		-.1856								
.113	-.0760									
.140					-.5581	-.5034	-.4771	-.4485		
.157									-.5554	
.163			.0000							
.177				-.4752						
.229		-.1784								
.246			-.3076							
.247	-.1086									
.250					-.6347	-.6190	-.5935	-.5819		
.274				-.4420						
.345									-.6673	
.362		-.1348								
.390			-.3518							
.400					-.6618	-.7101		-.6848		
.402				-.5061						
.418										-.5883
.429	-.1526									
.497		-.2875								
.503									-.6752	
.547	-.1632									
.550					-.5849	-.7348				
.565				-.4764						
.600								-.6708		
.633	-.3418									
.637			-.4512							
.650							-.7021			
.670									-.6263	
.700		-.4293				-.8744				
.708										-.6158
.725					-.2931					
.727	-.3637									
.750							-.5837	-.5760		
.760				-.2245						
.775					-.5160	-.6068				

AMES 11-073(OA148) -140A/B/C ORB LEFT WING TOP (XEB277)

ALPHA (4) = 7.974 BETA (1) = -3.859

SECTION (1)LEFT WING TOP SURF DEPENDENT VARIABLE CP

2Y/BW	.2350	.2990	.3640	.4270	.5340	.6730	.7800	.8870	.9720	1.0000
X/CW										
.793	-.1837									
.798			-.1547							
.808				-.4460						
.834		-.0449								
.839			-.4265							
.850					-.3704	-.5022	-.5660			
.857				-.4203						
.862									-.6230	
.865		-.3941								
.879			-.3614							
.900		-.2278			-.2651			-.5988		
.905				-.3717						
.919			-.2874							
.950					-.2091	-.3370	-.5442			
.953				-.3182						
.955			-.2455							
.965		-.2990								

ALPHA (4) = 7.979 BETA (2) = .184 MACH = 1.2449 Q = 599.64 P = 552.75 RN/L = 3.0238

SECTION (1)LEFT WING TOP SURF DEPENDENT VARIABLE CP

2Y/BW	.2350	.2990	.3640	.4270	.5340	.6730	.7800	.8870	.9720	1.0000
X/CW										
.000	-.0045	-.3378	-.5520	-.0313	.5008	.5504	.5499	.4942	-.2808	
.010		-.4093	-.5100		-.1063	.0635	.0158	-.1281		
.020		-.3798		.0000	-.2105	-.0330	-.1016	-.1835	-.5354	
.040			-.4120	-.3762						
.041	-.1306									
.050					-.3423	-.2866	-.2969	-.3437		
.069									-.5349	
.080					-.4405					
.081				-.3179						
.096			-.3252							
.094		-.2592								
.113	-.1531									
.150					-.5680	-.5437	-.5222	-.5012		
.157									-.6175	
.153			.0000							
.177				-.3707						
.229		-.2429								
.245			-.2827							
.247	-.1735									
.250					-.6065	-.6376	-.6204	-.5996		

AMES 11-073(OA148) -140A/B/C ORB LEFT WING TOP (XEBU77)

ALPHA (4) = 7.979 BETA (2) = .184

SECTION (1)LEF, WING TOP SURF DEPENDENT VARIABLE CP

2Y/BW	.2350	.2990	.3640	.4270	.5340	.6730	.7800	.8870	.972	1.0000
X/CW										
.274				-.3973						
.345									-.6621	
.362		-.1141								
.390			-.3507							
.400					-.5797	-.7149		-.7046		
.402				-.4699						
.418										-.6948
.429	-.1531									
.497		-.2801								
.503									-.6722	
.547	-.1502									
.550					-.5428	-.7183				
.565				-.4706						
.600								-.6855		
.633	-.3410									
.637			-.4726							
.650							-.7015			
.670									-.5824	
.700		-.4127				-.6314				
.723										-.5634
.725					-.2838					
.727	-.3614									
.750							-.5834	- 5439		
.760				-.1533						
.775					-.5198	-.6453				
.793	-.0187									
.798			-.1494							
.808				-.4579						
.834		-.0652								
.839			-.4194							
.850					-.4599	-.3699	-.5707			
.857				-.4558						
.862									-.5707	
.865		-.4414								
.879			-.3713							
.900		-.2664			-.4156			-.5667		
.905				-.4333						
.919			-.3013							
.950					-.2711	-.2469	-.5182			
.953				-.3796						
.955			-.3102							
.965		-.3808								

AMES 11-073(OA148) -140A/B/C ORB LEFT WING TOP (XEBU77)

ALPHA (4) = 7.978 BETA (3) = 4.242 MACH = 1.2449 Q = 599.64 P = 552.75 RN/L = 3.0238

SECTION (1)LEFT WING TOP SURF DEPENDENT VARIABLE CP

2Y/BW	.2350	.2990	.3540	.4270	.5340	.6730	.7800	.8870	.9720	1.0000
X/CW										
.000	-.0508	-.5493	-.5075	-.1974	.3601	.4172	.4163	.3517	-.4827	
.010		-.4924	-.5008		-.2214	-.0662	-.1311	-.2607		
.020		-.4852		.0000	-.3081	-.2016	-.2260	-.3122	-.6530	
.040			-.4665	-.2264						
.041	-.1750									
.050					-.4012	-.3684	-.3817	-.4455		
.069									-.6986	
.080					-.4747					
.081				-.2733						
.086			-.4150							
.094		-.5190								
.113	-.2131									
.150					-.5712	-.5811	-.5659	-.5604		
.157									-.6875	
.163			.0000							
.177				-.2970						
.229		-.2669								
.246			-.3856							
.247	-.2344									
.250					-.4972	-.6522	-.6511	-.6395		
.274				-.3567						
.345									-.6945	
.362		-.0272								
.390			-.2655							
.400					-.5145	-.6990		-.7280		
.402				-.4688						
.418										-.6915
.429	-.1404									
.497		-.2467								
.503									-.6935	
.547	-.1323									
.550					-.5197	-.6956				
.565				-.4901						
.600								-.7082		
.633	-.3552									
.637			-.4334							
.650							-.7043			
.670									-.6257	
.700		-.3943				-.4335				
.723										-.6188
.725					-.2446					
.727	-.3647									
.750							-.5988	-.5803		
.760				-.1478						
.775					-.4919	-.5088				

AMES 11-073(OA148) -140A/B/C OFB LEFT WING TOP (XEBU77)

ALPHA (4) = 7.578 BETA (3) = 4.242

SECTION (1)LEFT WING TOP SURF DEPENDENT VARIABLE CP

2Y/BW	.2350	.2990	.3640	.4270	.5340	.6730	.7800	.8870	.9720	1.0000
X/CW										
.793	.0407									
.798			-.1393							
.808				-.4382						
.834		-.1207								
.839			-.4372							
.850					-.4386	-.3607	-.5971			
.857				-.4461						
.862									-.6139	
.865		-.4643								
.879			-.3467							
.900		-.3216			-.4127			-.5707		
.905				-.4376						
.919			-.3216							
.950					-.2817	-.2287	-.5286			
.953				-.4063						
.955			-.3709							
.965		-.4336								

ALPHA (5) = 11.961 BETA (1) = -3.847 MACH = 1.2454 Q = 599.63 P = 552.28 RN/L = 3.0229

SECTION (1)LEFT WING TOP SURF DEPENDENT VARIABLE CP

2Y/BW	.2350	.2990	.3640	.4270	.5340	.6730	.7800	.8870	.9720	1.0000
X/CW										
.000	.0545	-.3307	-.4962	-.0084	.5117	.5539	.5370	.4434	-.3710	
.010		-.3977	-.4584		-.1560	-.0487	-.1351	-.2918		
.020		-.3846		.0000	-.3108	-.2113	-.2598	-.3553	-.7369	
.040			-.3846	-.4645						
.041	-.0642									
.050					-.4565	-.3986	-.4242	-.4906		
.069									-.7343	
.080					-.5563					
.081				-.5229						
.086			-.3107							
.094		-.2653								
.113	-.0771									
.150					-.6884	-.6408	-.6179	-.6218		
.157									-.7393	
.163			.0000							
.177				-.5981						
.229		-.2352								
.245			-.3877							
.247	-.1099									
.250					-.7527	-.7281	-.7080	-.6896		

AMES 11-073(OA148) -140A/B/C ORB LEFT WING TOP (XEBU77)

ALPHA (5) = 11.961 BETA (1) = -3.847

SECTION (1)LEFT WING TOP SURF DEPENDENT VARIABLE CP

2Y/BW	.2350	.2990	.3640	.4270	.5340	.6730	.7800	.8870	.9720	1.0000
X/CW										
.274				-.5777						
.345									-.7618	
.362		-.1902								
.390			-.4758							
.400					-.7589	-.7907		-.7631		
.402				-.6007						
.418										-.7372
.429	-.1870									
.497		-.4549								
.503									-.7489	
.547	-.2897									
.550					-.7551	-.7593				
.555				-.5612						
.600								-.7203		
.633	-.4668									
.637			-.5449							
.650							-.7207			
.670									-.6655	
.700		-.5275				-.6950				
.723										-.6165
.725					-.6673					
.727	-.4542									
.750							-.6279	-.6875		
.760				-.3076						
.775					-.6908	-.6252				
.793	-.2325									
.798			-.2357							
.808				-.5279						
.834		-.1432								
.839			-.5318							
.850					-.4979	-.5427	-.6164			
.857				-.5102						
.862									-.6576	
.865		-.4569								
.879			-.4349							
.900		-.2924			-.3522			-.7121		
.905				-.4116						
.919			-.3849							
.950					-.2639	-.4554	-.5209			
.953				-.3485						
.955			-.4029							
.965		-.4425								

AMES 11-073(OA148) -140A/B/C ORB LEFT WING TOP (XEBU77)

ALPHA (5) = 11.970 BETA (2) = .192 MACH = 1.2454 Q = 599.63 P = 552.28 RN/L = 3.0229

SECTION (1)LEFT WING TOP SURF DEPENDENT VARIABLE CP

2Y/BW	.2350	.2990	.3640	.4270	.5340	.6730	.7800	.8870	.9720	1.0000
X/CW										
.000	-.0296	-.4824	-.4758	-.2148	.3349	.3817	.3672	.2689	-.5320	
.010		-.4246	-.4667		-.3490	-.2023	-.2892	-.4430		
.020		-.4081		.0000	-.4495	-.3525	-.4026	-.4868	-.7123	
.040			-.4554	-.4883						
.041	-.1362									
.050					-.5701	-.5073	-.5363	-.5968		
.069									-.7035	
.080					-.6503					
.081				-.5072						
.086			-.4283							
.094		-.4697								
.113	-.1853									
.150					-.7503	-.7047	-.6832	-.6924		
.157									-.7030	
.163			.0000							
.177				-.4933						
.229		-.5457								
.246			-.4725							
.247	-.1712									
.250					-.7489	-.7731	-.7532	-.7408		
.274				-.5223						
.345									-.7219	
.362		-.3901								
.390			-.4505							
.400					-.7379	-.7698		-.7405		
.402				-.5274						
.418										-.7246
.429	-.2637									
.497		-.4227								
.503									-.7257	
.547	-.2668									
.550					-.6716	-.7580				
.565				-.5346						
.600								-.6806		
.633	-.4591									
.637			-.5729							
.650							-.7047			
.670									-.6290	
.700		-.4819				-.6443				
.723										-.6233
.725					-.3373					
.727	-.4379									
.750							-.6393	-.6552		
.760				-.2359						
.775					-.5787	-.6640				

AMES 11-073(OA148) -140A/B/C ORB LEFT WING TOP (XEBU77)

ALPHA (5) = 11.970 BETA (2) = .192

SECTION (1)LEFT WING TOP SURF DEPENDENT VARIABLE CP

2Y/BW	.2350	.2990	.3640	.4270	.5340	.6730	.7800	.8870	.9720	1.0000
X/CW										
.793	-.1503									
.798			-.1977							
.808				-.5427						
.834		-.1584								
.839			-.5058							
.850					-.5093	-.5627	-.5559			
.857				-.5246						
.862									-.6254	
.865		-.4208								
.879			-.4040							
.900		-.3635			-.4512			-.6277		
.905				-.5111						
.919			-.3513							
.950					-.2124	-.4869	-.5419			
.953				-.5028						
.955			-.4248							
.965		-.4645								

ALPHA (5) = 11.962 BETA (3) = 4.260 MACH = 1.2454 Q = 599.63 P = 552.28 RN/L = 3.0229

SECTION (1)LEFT WING TOP SURF DEPENDENT VARIABLE CP

2Y/BW	.2350	.2990	.3640	.4270	.5340	.6730	.7800	.8870	.9720	1.0000
X/CW										
.000	-.0912	-.5155	-.5239	-.4518	.1495	.1911	.1809	.0790	-.8490	
.010		-.5038	-.5249		-.4986	-.3666	-.4303	-.5532		
.020		-.5004		.0000	-.5733	-.4970	-.5262	-.5997	-.7171	
.040			-.5301	-.4276						
.041	-.2065									
.050					-.6681	-.6147	-.6332	-.6824		
.069									-.7152	
.080					-.6760					
.081				-.4230						
.086			-.4387							
.094		-.5738								
.113	-.2309									
.150					-.6820	-.7303	-.7358	-.7486		
.157									-.7135	
.163			.0000							
.177				-.4465						
.229		-.6752								
.245			-.4871							
.247	-.2654									
.250					-.6468	-.7353	-.7677	-.7719		

AMES 11-073(OA148) -140A/B/C ORB LEFT WING TOP (XEBU77)

ALPHA (5) = 11.962 BETA (3) = 4.260

SECTION (1)LEFT WING TOP SURF DEPENDENT VARIABLE CP

2Y/BW	.2350	.2990	.3640	.4270	.5340	.6730	.7800	.8870	.9720	1.0000
X/CW										
.274				-.4698						
.345									-.7267	
.362		-.3656								
.390			-.5613							
.400					-.6418	-.7493		-.7429		
.402				-.5285						
.418										-.7234
.429	-.2906									
.497		-.3707								
.503									-.7392	
.547	-.2240									
.550					-.5664	-.7507				
.565				-.5431						
.600								-.6948		
.633	-.4150									
.637			-.5160							
.650							-.6684			
.670									-.6471	
.700		-.4162				-.6236				
.723										-.6430
.725					-.2423					
.727	-.4119									
.750							-.7143	-.6429		
.760				-.2227						
.775					-.5511	-.8445				
.793	-.0289									
.798			-.1930							
.808				-.5277						
.834		-.1971								
.839			-.4758							
.850					-.5219	-.4591	-.5972			
.857				-.5253						
.862									-.6379	
.865		-.4433								
.879			-.4085							
.900		-.3556			-.5142			-.6256		
.905				-.4762						
.919			-.3829							
.950					-.3136	-.2816	-.5459			
.953				-.4501						
.955			-.4171							
.965		-.5587								

AMES 11-073(OA148) -140A/B/C ORB LEFT WING TOP (XEBU78) (05 AUG 75)

REFERENCE DATA

SREF = 2000.0000 SQ.FT. XMRP = 1076.6800 IN. XO
LREF = 474.8000 IN. YMRP = .0000 IN. YO
BREF = 936.0680 IN. ZMRP = 375.0000 IN. ZO
SCALE = .0300

PARAMETRIC DATA

RUDDER = -10.000 SPDBRK = .000
BDFLAP = -11.700 L-ELVN = 10.000
R-ELVN = -10.000 MACH = 1.100

ALPHA (1) = -4.062 BETA (1) = -3.838 MACH = 1.0993 Q = 599.81 P = 709.06 RN/L = 3.1886

SECTION (1)LEFT WING TOP SURF DEPENDENT VARIABLE CP

2Y/BW	.2350	.2990	.3640	.4270	.5340	.6730	.7800	.8870	.9720	1.0000
X/CW										
.000	-.2870	-.1152	-.1530	.2637	.6010	.5309	.4804	.5023	-.6282	
.010		-.0545	-.0392		.7270	.6969	.6598	.5757		
.020		-.0451		.0000	.6467	.6021	.5717	.5345	-.1295	
.040			.0450	.4763						
.041	-.1451									
.050					.4351	.3903	.3730	.3451		
.069									-.1999	
.080					.2515					
.081				.3654						
.086			.2491							
.094		-.0121								
.113	-.1138									
.150					.0323	.0058	.0076	.0024		
.157									-.3519	
.163			.0000							
.177				.0882						
.229		.0324								
.246			.1801							
.247	.0082									
.250					-.1428	-.2026	-.2227	-.2530		
.274				-.0258						
.395									-.3865	
.362		.2144								
.390			-.0078							
.400					-.0435	-.2826		-.4721		
.402				-.1358						
.418										-.7083
.429	.1270									
.497		.0147								
.503									-.3821	
.547	.1359									
.550					.0929	-.0497				
.565				.1898						
.600								-.2348		
.633	-.0198									
.637			.2398							
.650							-.1682			
.670									-.4836	

AMES 11-073(OA148) -140A/B/C ORB LEFT WING TOP (XEBU78)

ALPHA (1) = -4.062 BETA (1) = -3.838

SECTION (1)LEFT WING TOP SURF DEPENDENT VARIABLE CP

2Y/BW	.2350	.2990	.3640	.4270	.5340	.6730	.7800	.8870	.9720	1.0000
X/CW										
.700		.2632				-.0275				
.723										-.4543
.725					.0048					
.727	.2294									
.750							-.5255	-.5496		
.760				-.0404						
.775					-.4394	-.4694				
.793	.3601									
.798			-.0166							
.808				-.4488						
.834		-.0011								
.839			-.4522							
.850					-.4284	-.2977	-.4934			
.857				-.4521						
.862									-.3002	
.865		-.4910								
.879			-.3786							
.900		-.3087			-.4435			-.4183		
.905				-.4071						
.919			-.3547							
.950					-.3537	-.3827	-.1892			
.953				-.3486						
.955			-.3328							
.965		-.3567								

ALPHA (1) = -4.058 BETA (2) = .195 MACH = 1.0993 Q = 599.81 P = 709.08 RN/L = 3.1886

SECTION (1)LEFT WING TOP SURF DEPENDENT VARIABLE CP

2Y/BW	.2350	.2990	.3640	.4270	.5340	.6730	.7800	.8870	.9720	1.0000
X/CW										
.000	-.2805	-.1215	-.1018	.2810	.5445	.4525	.3960	.4074	-.7124	
.010		-.0867	-.0223		.6639	.6349	.5996	.5415		
.020		-.0793		.0000	.5984	.5522	.5350	.5015	-.2116	
.040			.0443	.4323						
.041	-.2391									
.050					.4105	.3683	.3639	.3375		
.069									-.2485	
.080					.2431					
.091				.3382						
.066			.2230							
.094		-.0414								
.113	-.1811									
.150					.0457	.0327	.0322	.0205		

AMES 11-073(OA148) -140A/B/C ORB LEFT WING TOP (XEBU78)

ALPHA (1) = -4.058 BETA (2) = .195

SECTION (1)LEFT WING TOP SURF DEPENDENT VARIABLE CP

2Y/BW	.2350	.2990	.3640	.4270	.5340	.6730	.7800	.6870	.9720	1.0000
X/CW										
.157									-.3589	
.163			.0000							
.177				.1216						
.229		.0173								
.246			.1716							
.247	-.0125									
.250					-.0976	-.1610	-.1668	-.2221		
.274				.0000						
.345									-.2875	
.362		.2044								
.380			.0065							
.400					.0521	-.0376		-.2990		
.402				-.0316						
.418										-.7569
.429	.1094									
.497		.0465								
.503									-.2528	
.547	.1374									
.550					.0762	-.0615				
.565				.1733						
.620								-.3039		
.633	.0457									
.637			.2175							
.650							-.1855			
.670									-.5198	
.700		.2480				-.0543				
.723										-.2735
.725					-.0188					
.727	.2230									
.750							-.5543	-.5906		
.760				-.0603						
.775					-.4584	-.4820				
.793	.3388									
.798			-.0366							
.809				-.4746						
.834		-.0218								
.839			-.4819							
.850					-.4570	-.3181	-.5210			
.857				-.4849						
.862									-.2385	
.865		-.5188								
.873			-.4104							
.900		-.3458			-.4746			-.4757		
.905				-.4438						
.919			-.3793							

AMES 11-073(OA148) -140A/B/C ORB LEFT WING TOP (XEBU78)

ALPHA (1) = -4.058 BETA (2) = .195

SECTION (1)LEFT WING TOP SURF DEPENDENT VARIABLE CP

2Y/BW	.2350	.2990	.3640	.4270	.5340	.6730	.7800	.8870	.9720	1.0000
X/CW										
.950					-.4078	-.4307	-.2941			
.953				-.3887						
.955			-.3608							
.965		-.3779								

ALPHA (1) = -4.055 BETA (3) = 4.277 MACH = 1.0093 Q = 599.81 P = 709.05 RN/L = 3.1888

SECTION (1)LEFT WING TOP SURF DEPENDENT VARIABLE CP

2Y/BW	.2350	.2990	.3640	.4270	.5340	.6730	.7800	.8870	.9720	1.0000
X/CW										
.000	-.2796	-.1366	-.0495	.3355	.5038	.3746	.3027	.3097	-.7752	
.010		-.0830	.0054		.6151	.5623	.5196	.4604		
.020		-.0725		.0000	.5525	.4920	.4616	.4287	-.3009	
.040			.0683	.4116						
.041	-.3035									
.050					.3822	.3300	.3041	.2870		
.069									-.3210	
.080					.2360					
.081				.3302						
.086			.2494							
.094		-.0545								
.113	-.2403									
.150					.0543	.0272	.0035	.0034		
.157									-.3793	
.163			.0000							
.177				.1372						
.229		.0336								
.246			.1894							
.247	-.0289									
.250					-.0750	-.1537	-.1578	-.1633		
.274				.0288						
.345									-.3114	
.362		.2338								
.390			.0365							
.400					.0457	-.0383		-.2996		
.402				-.0320						
.418										-.3587
.429	.1303									
.493		.0526								
.503									-.2474	
.547	.1540									
.550					.0557	-.0714				
.565				.1530						

AMES 11-073(OA148) -140A/B/C ORB LEFT WING TOP (XEBU78)

ALPHA (1) = -4.055 BETA (3) = 4.277

SECTION (1)LEFT WING TOP SURF DEPENDENT VARIABLE CP

2Y/BW	.2350	.2990	.3640	.4270	.5340	.6730	.7800	.8870	.9720	1.0000
X/CW										
.600								-.3181		
.633	.0568									
.637			.1938							
.650							-.2055			
.670									-.4519	
.700		.2206				-.0913				
.723										-.2769
.725					-.0489					
.727	.1950									
.750							-.5780	-.6169		
.760				-.0804						
.775					-.4832	-.5064				
.793	.3183									
.798			-.0623							
.803				-.4972						
.834		-.0502								
.839			-.5083							
.850					-.4909	-.3526	-.5542			
.857				-.5151						
.862									-.2594	
.865		-.5464								
.879			-.4573							
.900		-.3828			-.5112			-.4905		
.905				-.4945						
.919			-.4133							
.950					-.4725	-.4625	-.3868			
.953				-.4318						
.955			-.3989							
.965		-.4167								

ALPHA (2) = .040 BETA (1) = -3.863 MACH = 1.0990 Q = 599.71 P = 709.30 RN/L = 3.1896

SECTION (1)LEFT WING TOP SURF DEPENDENT VARIABLE CP

2Y/BW	.2350	.2990	.3640	.4270	.5340	.6730	.7800	.8870	.9720	1.0000
X/CW										
.000	-.1545	-.0437	-.0125	.4583	.6856	.6199	.5824	.5904	-.3509	
.010		-.0671	.0325		.5683	.5824	.5343	.4160		
.020		-.0966		.0000	.4569	.4336	.4018	.3569	-.1475	
.040			.0562	.2930						
.041	-.1566									
.050					.2219	.1688	.1454	.1250		
.069									-.2355	
.080					.0151					

AMES 11-073(OA148) -140A/B/C ORB LEFT WING TOP (XEBU78)

ALPHA (2) = .040 BETA (1) = -3.863

SECTION (1)LEFT WING TOP SURF DEPENDENT VARIABLE CP

2Y/BW	.2350	.2990	.3640	.4270	.5340	.6730	.7800	.8870	.9720	1.0000
X/CW										
.081				.1398						
.086			.1493							
.094		-.1018								
.113	-.1179									
.150					-.2234	-.2550	-.2394	-.2111		
.157									-.4499	
.163			.0000							
.177				-.0770						
.229		-.0188								
.246			.0176							
.247	-.0860									
.250					-.3403	-.4074	-.4251	-.4325		
.274				-.2205						
.345									-.4837	
.362		.1119								
.390			-.1801							
.400					-.4608	-.5567		-.6504		
.402				-.3926						
.418										-.1504
.429	.0609									
.497		-.1040								
.503									-.5339	
.547	.0293									
.550					-.0806	-.4767				
.565				.0214						
.600								-.6475		
.633	-.2054									
.637			.1115							
.650							-.5543			
.670									-.3908	
.700		.0918				-.0451				
.723										-.5659
.725					-.0006					
.727	.0090									
.750							-.5455	-.4021		
.760				-.0348						
.775					-.4508	-.4563				
.793	.2823									
.798			-.0127							
.808				-.4497						
.834		-.0104								
.839			-.4539							
.850					-.4424	-.3092	-.2781			
.857				-.4485						
.862									-.3490	

AMES 11-073(OA14B) -140A/B/C ORB LEFT WING TOP (XE8U7B)

ALPHA (2) = .040 BETA (1) = -3.863

SECTION (1)LEFT WING TOP SURF DEPENDENT VARIABLE CP

2Y/BW	.2350	.2990	.3640	.4270	.5340	.6730	.7800	.8870	.9720	1.0000
X/CW										
.865		-.4862								
.879			-.3731							
.900		-.3232			-.4493			-.3298		
.905				-.4026						
.919			-.3372							
.950					-.2888	-.2747	-.0861			
.953				-.3409						
.955			-.3413							
.965		-.3676								

ALPHA (2) = .041 BETA (2) = .186 MACH = 1.0990 Q = 599.71 P = 709 30 RN/L = 3 .896

SECTION (1)LEFT WING TOP SURF DEPENDENT VARIABLE CP

2Y/BW	.2350	.2990	.3640	.4270	.5340	.6730	.7800	.8870	.9720	1.0000
X/CW										
.000	-.1719	-.1278	-.0330	.4291	.6228	.5458	.4983	.5194	-.2151	
.010		-.1702	-.0112		.4872	.4981	.4546	.3579		
.020		-.1939		.0000	.3823	.3529	.3345	.3022	-.1522	
.040			.0309	.2379						
.041	-.2310									
.050					.1658	.1073	.0971	.0855		
.059									-.2331	
.060					-.0128					
.081				.1031						
.086			.1221							
.094		-.1144								
.113	-.1896									
.150					-.2308	-.2648	-.2515	-.2228		
.157									-.4439	
.163			.0000							
.177				-.0946						
.229		-.0299								
.245			-.0037							
.247	-.0974									
.250					-.3304	-.3654	-.4161	-.4378		
.274				-.2188						
.345									-.4584	
.362		.0965								
.380			-.1843							
.400					-.4404	-.5264		-.6157		
.402				-.3741						
.418										-.1819
.429	.0570									

AMES 11-073(OA148) -140A/B/C ORB LEFT WING TOP (XE8U78)

ALPHA (2) = .041 BETA (2) = .186

SECTION (1)LEFT WING TOP SURF DEPENDENT VARIABLE CP

2Y/BW	.2350	.2990	.3640	.4270	.5340	.6730	.7800	.8870	.9720	1.0000
X/CH										
.497		-.1146								
.503									-.5071	
.547	.0046									
.550					.0036	-.1256				
.565				.0840						
.600								-.5622		
.633	-.2114									
.637			.1287							
.650							-.1587			
.670									-.6835	
.700		.1456				-.0439				
.723										-.7531
.725					-.0197					
.727	.0893									
.750							-.5288	-.5229		
.760				-.0474						
.775					-.4685	-.4900				
.793	.2620									
.798			-.0315							
.808				-.4763						
.834		-.0359								
.839			-.4789							
.850					-.4675	-.3316	-.4594			
.857				-.4806						
.662									-.5899	
.665		-.5100								
.879			-.3916							
.900		-.3400			-.4823			-.2254		
.905				-.4203						
.919			-.3543							
.950					-.3869	-.4426	-.1644			
.953				-.3662						
.955			-.3594							
.965		-.3990								

AMES 11-073(OA148) -140A/B/C ORB LEFT WING TOP (XEBU7B)

ALPHA (2) = .036 BETA (3) = 4.252 MACH = 1.0990 Q = 599.71 P = 709.30 RN/L = 3.1896

SECTION : 1)LEFT WING TOP SURF DEPENDENT VARIABLE CP

2Y/BW	.2350	.2990	.3640	.4270	.5340	.6730	.7800	.8870	.9720	1.0000
X/CW										
.000	-.1915	-.2405	-.0520	.4201	.5917	.4900	.4371	.4351	-.1780	
.010		-.2813	-.0311		.4296	.4164	.3665	.2569		
.020		-.2806		.0000	.3359	.2846	.2507	.2021	-.2220	
.040			.0284	.2191						
.041	-.2915									
.050					.1419	.0588	.0281	.0040		
.069									-.2895	
.080					-.0295					
.081				.1090						
.086			.1209							
.094		-.1201								
.113	-.2514									
.150					-.2061	-.2666	-.2759	-.2672		
.157									-.4733	
.163			.0000							
.177				-.0673						
.229		-.0099								
.246			.0239							
.247	-.0955									
.250					-.3041	-.3695	-.3953	-.4612		
.274				-.1820						
.345									-.4805	
.362		.1183								
.390			-.1560							
.400					-.3999	-.5018		-.6413		
.402				-.3228						
.418										-.2588
.429	.0630									
.497		-.0830								
.503									-.5121	
.547	.0355									
.550					.0008	-.1094				
.565				.0753						
.600								-.3688		
.633	-.1720									
.637			.1164							
.650							-.1667			
.670									-.5731	
.700		.1243				-.0831				
.723										-.8948
.725					-.0564					
.727	.0861									
.750							-.5659	-.4980		
.760				-.0776						
.775					-.4924	-.5130				

AMES 11-073(OA148) -140A/B/C ORB LEFT WING TOP (XE8U78)

ALPHA (2) = .036 BETA (3) = 4.252

SECTION (1)LEFT WING TOP SURF DEPENDENT VARIABLE CP

2Y/BW	.2350	.2990	.3640	.4270	.5340	.6730	.7800	.8870	.9720	1.0000
X/CW										
.793	.2365									
.798			-.0614							
.808				-.5058						
.834		-.0704								
.839			-.5063							
.850					-.5010	-.3649	-.4886			
.857				-.5063						
.862									-.3816	
.865		-.5465								
.879			-.4303							
.900		-.3719			-.5198			-.2827		
.905				-.4632						
.919			-.3961							
.950					-.4595	-.4840	-.2211			
.953				-.4180						
.955			-.4016							
.965		-.4572								

ALPHA (3) = 4.006 BETA (1) = -3.864 MACH = 1.0989 Q = 599.58 P = 709.30 RN/L = 3.1896

SECTION (1)LEFT WING TOP SURF DEPENDENT VARIABLE CP

2Y/BW	.2350	.2990	.3640	.4270	.5340	.6730	.7800	.8870	.9720	1.0000
X/CW										
.000	-.0706	-.0831	-.1437	.4713	.7191	.6976	.6782	.6442	.0111	
.010		-.1557	-.1159		.3230	.3995	.3352	.1469		
.020		-.1756		.0000	.2023	.2083	.1639	.0760	-.2612	
.040			-.0600	.0526						
.041	-.1480									
.050					-.0409	-.0658	-.0967	-.1582		
.069									-.3299	
.080					-.2206					
.081				-.1040						
.086			-.0006							
.094		-.2254								
.113	-.1250									
.150					-.3926	-.4570	-.4313	-.4085		
.157									-.5536	
.163			.0000							
.177				-.2620						
.229		-.0827								
.245			-.1482							
.247	-.1727									
.250					-.5103	-.5863	-.6011	-.5840		

AMES 11-073(OA148) -140A/B/C ORB LEFT WING TOP (XE8U78)

ALPHA (3) = 4.006 BETA (1) = -3.864

SECTION (1)LEFT WING TOP SURF DEPENDENT VARIABLE CP

2Y/BW	.2350	.2990	.3640	.4270	.5340	.6730	.7800	.8870	.9720	1.0000
X/CW										
.274				-.3700						
.345									-.6528	
.362		.0426								
.390			-.3105							
.400					-.5893	-.7288		-.7703		
.402				-.5065						
.418										-.4537
.429	.0121									
.497		-.1983								
.503									-.6669	
.547	-.0727									
.550					-.3495	-.7319				
.565				-.1967						
.600								-.7791		
.633	-.3165									
.637			-.1394							
.650							-.7675			
.670									-.5517	
.700		-.1672				-.4467				
.723										-.5370
.725					-.1772					
.727	-.3246									
.750							-.6212	-.5909		
.760				-.0542						
.775					-.4991	-.5086				
.793	.1839									
.798			-.0553							
.808				-.4225						
.834		-.0319								
.839			-.4647							
.850					-.4368	-.2947	-.5002			
.857				-.4514						
.862									-.5608	
.865		-.5176								
.879			-.3809							
.900		-.3291			-.3051			-.5018		
.905				-.4193						
.919			-.3529							
.950					-.1041	-.1524	-.2991			
.953				-.2271						
.955			-.3639							
.965		-.3831								

AMES 11-073(OA148) -140A/B/C ORB LEFT WING TOP (XE8U78)

ALPHA (3) = 4.004 BETA (2) = .194 MACH = 1.0989 Q = 599.58 P = 709.30 RN/L = 3.1896

SECTION (1)LEFT WING TOP SURF DEPENDENT VARIABLE CP

2Y/BW	.2350	.2990	.3640	.4270	.5340	.6730	.7800	.8870	.9720	1.0000
X/CW										
.000	-.1149	-.2399	-.2557	.3908	.6408	.6127	.5957	.5591	-.0925	
.010		-.3104	-.2047		.2238	.2931	.2278	.0570		
.020		-.3066		.0000	.1164	.1167	.0803	-.0222	-.3412	
.040			-.1127	.0004						
.041	-.2246									
.050					-.0890	-.1274	-.1615	-.2182		
.069									-.3867	
.080					-.2570					
.081				-.1252						
.085			-.0064							
.094		-.2998								
.113	-.2076									
.150					-.4016	-.4806	-.4588	-.4402		
.157									-.5887	
.163			.0000							
.177				-.2590						
.229		-.0937								
.246			-.1428							
.247	-.2301									
.250					-.4941	-.5822	-.6056	-.5981		
.274				-.3587						
.345									-.6806	
.362		.0328								
.390			-.3025							
.400					-.5640	-.6936		-.7704		
.402				-.4884						
.418										-.6190
.429	.0089									
.497		-.2116								
.503									-.6964	
.547	-.0854									
.550					-.2474	-.6730				
.565				-.1585						
.600								-.7561		
.633	-.3211									
.637			-.0827							
.650							-.7418			
.670									-.6124	
.700		-.0949				-.2144				
.723										-.6149
.725					-.1236					
.727	-.2512									
.750							-.8134	-.6548		
.760				-.0513						
.775					-.5032	-.5220				

AMES 11-073(OA148) -140A/B/C ORB LEFT WING TOP (XE8U78)

ALPHA (3) = 4.004 BETA (2) = .194

SECTION (1)LEFT WING TOP SURF DEPENDENT VARIABLE CP

2Y/BW	.2350	.2990	.3640	.4270	.5340	.6730	.7800	.8870	.9720	1.0000
X/CW										
.793	.2121									
.798			-.0544							
.809				-.4592						
.834		-.0535								
.839			-.4938							
.850					-.4538	-.3117	-.3322			
.857				-.4676						
.882									-.6150	
.865		-.5481								
.879			-.4127							
.880		-.3533			-.4395			-.4826		
.905				-.4347						
.919			-.3742							
.950					-.1611	-.1734	-.1337			
.953				-.3239						
.955			-.3848							
.965		-.4230								

ALPHA (3) = 4.004 BETA (3) = 4.242 MACH = 1.0989 Q = 599.58 P = 709.30 RN/L = 3.1896

SECTION (1)LEFT WING TOP SURF DEPENDENT VARIABLE CP

2Y/BW	.2350	.2990	.3640	.4270	.5340	.6730	.7800	.8870	.9720	1.0000
X/CW										
.000	-.1605	-.4510	-.3097	.2924	.5682	.5318	.5008	.4398	-.2931	
.010		-.4907	-.1744		.1212	.1816	.0944	-.0834		
.020		-.4505		.0000	.0364	.0201	-.0372	-.1568	-.4959	
.040			-.0995	-.0280						
.041	-.2886									
.050					-.1282	-.1927	-.2485	-.3264		
.069									-.5072	
.080					-.2734					
.081				-.1254						
.086			-.0054							
.094		-.3214								
.113	-.2898									
.150					-.4060	-.4968	-.5088	-.5147		
.157									-.6574	
.164			.0000							
.177				-.2307						
.209		-.0815								
.246			-.1141							
.247	-.2383									
.253					-.4647	-.5999	-.6271	-.6455		

AMES 11-073(OA148) -140A/B/C ORB LEFT WING TOP (XEBU78)

ALPHA (3) = 4.004 BETA (3) = 4.242

SECTION (1)LEFT WING TOP SURF DEPENDENT VARIABLE CP

2Y/BW	.2350	.2990	.3640	.4270	.5340	.6730	.7800	.8870	.9720	1.0000
X/CW										
.274				-.3154						
.345										
.362		.0406							-.7389	
.390			-.2620							
.400					-.5414	-.6573		-.7955		
.402				-.4469						
.418										
.429	.0442									-.8653
.497		-.1794								
.503										
.547	-.0511								-.7902	
.550										
.565					-.2328	-.6194				
.600				-.1479						
.633	-.2934							-.7414		
.637			-.0586							
.650										
.670							-.6315			
.700		-.0372							-.7118	
.723						-.2129				
.725										-.7290
.727	-.1822				-.0966					
.750										
.760							-.6322	-.7514		
.775				-.0849						
.793	.1809				-.5149	-.4944				
.798			-.0866							
.808										
.834		-.0968		-.5168						
.839										
.850			-.5324							
.857					-.5149	-.3614	-.3456			
.862				-.5154						
.865		-.5729							-.7200	
.879			-.4565							
.900		-.3768			-.5144					
.905				-.4818				-.5075		
.919			-.4091							
.950					-.3876	-.3401	-.1557			
.953				-.4532						
.955			-.4292							
.965		-.5248								

AMES 11-073(OA148) -140A/B/C ORB LEFT WING TOP (XEBU78)

ALPHA (4) = 8.022 BETA (1) = -3.857 MACH = 1.1003 Q = 600.35 P = 708.37 RN/L = 3.1925

SECTION (1)LEFT WING TOP SURF DEPENDENT VARIABLE CP

2Y/BW	.2350	.2990	.3640	.4270	.5340	.6730	.7800	.8870	.9720	1.0000
X/CW										
.000	-.0307	-.2377	-.5357	.2044	.6172	.6259	.5960	.4931	-.2994	
.010		-.3396	-.5398		-.0542	.0641	-.0367	-.2332		
.020		-.3124		.0000	-.1445	-.1213	-.1702	-.3185	-.6980	
.040			-.3909	-.2078						
.041	-.1528									
.050					-.3177	-.3407	-.3972	-.4954		
.069									-.6786	
.080					-.4648					
.081				-.3201						
.086			-.2857							
.094		-.2844								
.113	-.1270									
.150					-.6694	-.6638	-.6660	-.6662		
.157									-.7934	
.163			.0000							
.177				-.4284						
.229		-.2463								
.246			-.2346							
.247	-.1856									
.250					-.7056	-.7882	-.7854	-.7692		
.274				-.4805						
.345									-.8372	
.362		-.0067								
.390			-.3803							
.400					-.7159	-.8865		-.8468		
.402				-.5842						
.418										-.8357
.429	-.0816									
.497		-.2908								
.503									-.8185	
.547	-.1053									
.550					-.6947	-.8604				
.565				-.4886						
.600								-.8184		
.633	-.3980									
.637			-.4235							
.650							-.7815			
.670									-.6290	
.700		-.5154				-.6259				
.723										-.6179
.725					-.3003					
.727	-.4440									
.750							-.5741	-.6351		
.760				-.1132						
.775					-.5638	-.5155				

AMES 11-073(OA148) -140A/B/C ORB LEFT WING TOP (XE8U78)

ALPHA (4) = 8.022 BETA (1) = -3.857

SECTION (1)LEFT WING TOP SURF DEPENDENT VARIABLE CP

2Y/BW	.2350	.2990	.3640	.4270	.5340	.6730	.7800	.8870	.9720	1.0000
X/CW										
.793	.0909									
.798			-.1184							
.808				-.4699						
.834		-.0306								
.839			-.5487							
.850					-.4405	-.3369	-.5145			
.857				-.4840					-.6206	
.862										
.865		-.5382								
.879			-.4053							
.900		-.3573			-.3441			-.6248		
.905				-.4301						
.919			-.3753							
.950					-.2225	-.2[illegible]	.4540			
.953				-.2929						
.955			-.3586							
.965		-.4274								

ALPHA (4) = 8.002 BETA (2) = .186 MACH = 1.1003 Q = 600.35 P = 708.37 RN/L = 3.1925

SECTION (1)LEFT WING TOP SURF DEPENDENT VARIABLE CP

2Y/BW	.2350	.2990	.3640	.4270	.5340	.6730	.7800	.8870	.9720	1.0000
X/CW										
.000	-.0987	-.4709	-.6931	.0627	.5003	.5058	.4773	.3805	-.4891	
.010		-.5356	-.5941		-.1577	-.0520	-.1542	-.3427		
.020		-.4934		.0000	-.2388	-.2108	-.2714	-.4074	-.7873	
.040			-.4668	-.2295						
.041	-.2206									
.050					-.3621	-.4053	-.4668	-.5700		
.069									-.8130	
.080					-.4923					
.081				-.2989						
.086			-.3522							
.094		-.3690								
.113	-.2242									
.150					-.6612	-.6836	-.6993	-.7082		
.157									-.8571	
.163			.0000							
.177				-.3773						
.229		-.2303								
.245			-.2755							
.247	-.2614									
.250					-.6729	-.7937	-.8018	-.7961		

AMES 11-073(OA148) -140A/B/C ORB LEFT WING TOP (XEBU78)

ALPHA (4) = 8.002 BETA (2) = .186

SECTION (1)LEFT WING TOP SURF DEPENDENT VARIABLE CP

2Y/BW	.2350	.2990	.3640	.4270	.5340	.6730	.7800	.9870	.9720	1.0000
X/CW										
.274				-.4446						
.345									-.8844	
.362		.0092								
.390			-.4134							
.402					-.6088	-.8604		-.9055		
.402				-.5526						
.419										-.9204
.429	-.0314									
.497		-.3014								
.503									-.8585	
.547	-.1150									
.550					-.5066	-.8676				
.555				-.4254						
.600								-.8555		
.633	-.0066									
.637			-.3205							
.650							-.8729			
.670									-.7233	
.700		-.4201				-.4586				
.723										-.7232
.725					-.2505					
.727	-.4210									
.750							-.7290	-.7505		
.760				-.1040						
.775					-.5792	-.4490				
.793	.1067									
.798			-.1136							
.808				-.5363						
.834		-.0769								
.839			-.5546							
.850					-.5181	-.2590	-.5788			
.857				-.5149						
.862									-.7226	
.865		-.5632								
.879			-.4651							
.900		-.3534			-.3695			-.6734		
.905				-.4917						
.919			-.3844							
.950					-.1606	-.1609	-.4603			
.953				-.4001						
.955			-.4182							
.965		-.5168								

AMES 11-073(OA148) -140A/B/C ORB LEFT WING TOP (XEBU78)

ALPHA (4) = 7.997 BETA (3) = 4.238 MACH = 1.1003 Q = 600.35 P = 708.37 RN/L = 3.1925

SECTION (1)LEFT WING TOP SURF DEPENDENT VARIABLE CP

2Y/BW	.2350	.2990	.3640	.4270	.5340	.6730	.7800	.8870	.9720	1.0000
X/CW										
.000	-.1587	-.6873	-.4561	-.0122	.3698	.3741	.3313	.2233	-.6930	
.010		-.5069	-.4233		-.2729	-.1875	-.3173	-.4935		
.020		-.5803		.0000	-.3449	-.3221	-.4088	-.5548	-.9226	
.040			-.3944	-.1149						
.041	-.2847									
.050					-.4119	-.4686	-.5617	-.6697		
.069									-.9034	
.090					-.5044					
.091				-.1725						
.095			-.2632							
.094		-.6540								
.113	-.3151									
.150					-.5872	-.7182	-.7456	-.7770		
.157									-.8955	
.163			.0000							
.177				-.2845						
.229		-.1646								
.246			-.2438							
.247	-.3247									
.250					-.5805	-.8048	-.8321	-.8443		
.274				-.3970						
.345									-.9221	
.362		.0677								
.390			-.3330							
.400					-.5996	-.8362		-.9333		
.402				-.5200						
.418										-.9142
.429	-.0221									
.497		-.2563								
.503									-.8689	
.547	-.0946									
.550					-.4632	-.7578				
.565				-.3216						
.600								-.8979		
.633	-.3837									
.637			-.1933							
.650							-.8977			
.670									-.7980	
.700		-.2970				-.3192				
.723										-.7997
.725					-.1503					
.727	-.3022									
.750							-.9190	-.8361		
.760				-.1548						
.775					-.5686	-.5721				

AMES 11-073(OA148) -140A/B/C ORB LEFT WING TOP (XEBU78)

ALPHA (4) = 7.997 BETA (3) = 4.238

SECTION (1)LEFT WING TOP SURF DEPENDENT VARIABLE CP

2Y/BW	.2350	.2990	.3640	.4270	.5340	.6730	.7800	.8870	.9720	1.0000
X/CW										
.793	.1075									
.798			-.1104							
.808				-.5669						
.834		-.1354								
.839			-.5630							
.850					-.5380	-.3684	-.5255			
.857				-.6017						
.862									-.7992	
.865		-.5480								
.879			-.4439							
.900		-.4159			-.5352			-.7224		
.905				-.5833						
.919			-.4668							
.950					-.2328	-.2828	-.3369			
.953				-.4845						
.955			-.5077							
.965		-.5785								

ALPHA (5) = 11.963 BETA (1) = -3.838 MACH = 1.0980 Q = 599.15 P = 710.01 RN/L = 3.1917

SECTION (1)LEFT WING TOP SURF DEPENDENT VARIABLE CP

2Y/BW	.2350	.2990	.3640	.4270	.5340	.6730	.7800	.8870	.9720	1.0000
X/CW										
.000	-.0463	-.4718	-.6499	-.1701	.3643	.3922	.3645	.2424	-.6202	
.010		-.5207	-.6058		-.4567	-.3099	-.4208	-.5956		
.020		-.5097		.0000	-.5679	-.4788	-.5486	-.6524	-.8004	
.040			-.5211	-.6202						
.041	-.1498									
.050					-.7063	-.6504	-.7001	-.7793		
.069									-.7718	
.080					-.8025					
.081				-.7011						
.086			-.4306							
.094		-.4017								
.113	-.1318									
.150					-.8416	-.8740	-.8680	-.8874		
.157									-.7687	
.163			.0000							
.177				-.5386						
.229		-.3485								
.245			-.3774							
.247	-.1955									
.250					-.8715	-.8702	-.8572	-.8881		

AMES 11-073(OA148) -140A/B/C ORB LEFT WING TOP (XEBU78)

ALPHA (5) = 11.953 BETA (1) = -3.838

SECTION (1)LEFT WING TOP SURF DEPENDENT VARIABLE CP

Z/BW	.2350	.2990	.3640	.4270	.5340	.6730	.7800	.8870	.5720	1.0000
X/CW										
.274				-.4464						
.345									-.8169	
.362		-.2257								
.390			-.4663							
.400					-.8757	-.8750		-.7884		
.402				-.5046						
.418										-.8048
.429	-.2681									
.497		-.3813								
.503									-.7610	
.547	-.1447									
.550					-.8209	-.8174				
.565				-.6197						
.600								-.7609		
.633	-.4510									
.637			-.6681							
.650							-.7807			
.670									-.5761	
.700		-.5903				-.7406				
.723										-.6696
.725					-.4070					
.727	-.5078									
.750							-.6819	-.6706		
.760				-.1625						
.775					-.7216	-.6468				
.793	-.0803									
.798			-.1890							
.808				-.6580						
.834		-.0787								
.839			-.5514							
.850					-.6457	-.5189	-.6419			
.857				-.6359						
.862									-.6735	
.865		-.5250								
.879			-.4734							
.900		-.2932			-.3906			-.6733		
.905				-.5970						
.919			-.4639							
.950					-.2304	-.3788	-.6066			
.953				-.5274						
.955			-.4605							
.965		-.4546								

AMES 11-073(OA148) -140A/B/C ORB LEFT WING TOP (XEB578)

ALPHA (5) = 11.967 BETA (2) = .194 MACH = 1.0980 Q = 599.15 P = 710.01 RN/L = 3.1917

SECTION (1)LEFT WING TOP SURF DEPENDENT VARIABLE CP

2Y/BW	.2350	.2990	.3540	.4270	.5340	.6730	.7800	.9870	.9720	1.0000
X/CW										
.000	-.1389	-.6412	-.6140	-.3955	.1964	.2404	.2135	.0913	-.7510	
.010		-.5549	-.6033		-.5939	-.4288	-.5259	-.5956		
.020		-.5299		.0000	-.6912	-.5890	-.6508	-.7471	-.7995	
.040			-.5293	-.3529						
.041	-.2415									
.060					-.6975	-.7244	-.7760	-.8511		
.059									-.7834	
.090					-.7065					
.091				-.0235						
.095			-.5409							
.094		-.6103								
.113	-.2667									
.150					-.6824	-.9080	-.9064	-.9108		
.157									-.7748	
.163			.0000							
.177				-.3797						
.229		-.7068								
.246			-.5129							
.247	-.2670									
.250					-.6920	-.9012	-.8851	-.9522		
.274				-.5389						
.345									-.8141	
.302		-.1758								
.370			-.5066							
.400					-.7480	-.9217		-.7818		
.402				-.6358						
.418										-.7953
.499	-.2384									
.497		-.3364								
.503									-.8033	
.547	-.1050									
.560					-.7244	-.8616				
.566				-.6435						
.600								-.7796		
.633	-.5071									
.637			-.6635							
.650							-.7887			
.670									-.7029	
.700		-.5337				-.7533				
.723										-.6989
.725					-.2978					
.727	-.5247									
.750							-.7254	-.7049		
.750				-.2410						
.775					-.6462	-.7120				

AMES 11-073(OA148) -140A/B/C ORB LEFT WING TOP (XE8U78)

ALPHA (5) = 11.967 BETA (2) = .194

SECTION (1)LEFT WING TOP SURF DEPENDENT VARIABLE CP

2Y/BW	.2350	.2990	.3640	.4270	.5340	.6730	.7600	.8870	.9720	1.0000
X/CW										
.793	-.0702									
.798			-.1643							
.808				-.6543						
.834		-.1400								
.839			-.6013							
.850					-.6104	-.4943	-.6882			
.857				-.5970						
.862									-.7088	
.865		-.5092								
.879			-.4424							
.900		-.4226			-.5698			-.7028		
.905				-.6058						
.919			-.4251							
.950					-.2494	-.3192	-.6199			
.953				-.6054						
.955			-.5031							
.965		-.5430								

ALPHA (5) = 11.958 BETA (3) = 4.256 MACH = 1.0980 Q = 599.15 P = 710.01 RN/L = 3.1917

SECTION (1)LEFT WING TOP SURF DEPENDENT VARIABLE CP

2Y/BW	.2350	.2990	.3640	.4270	.5340	.6730	.7800	.8870	.9720	1.0000
X/CW										
.000	-.2127	-.6825	-.6716	-.4338	.0799	.0916	.0483	-.0827	-.8631	
.010		-.6568	-.6524		-.6518	-.5488	-.6500	-.8047		
.020		-.6535		.0000	-.7196	-.6862	-.7483	-.8411	-.9396	
.040			-.6344	-.1438						
.041	-.3322									
.050					-.7408	-.7975	-.8555	-.9309		
.069									-.9369	
.080					-.7315					
.081				-.2549						
.086			-.5453							
.094		-.7241								
.113	-.3286									
.150					-.6976	-.9410	-.9575	-.9894		
.157									-.9362	
.163			.0300							
.177				-.4719						
.229		-.8367								
.245			-.4581							
.247	-.3824									
.250					-.6265	-.9643	-.9995	-1.0014		

AMES 11-073(OA148) -140A/B/C ORB LEFT WING TOP (XEBU78)

ALPHA (5) = 11.958 BETA (3) = 4.256

SECTION (1)LEFT WING TOP SURF DEPENDENT VARIABLE CP

2Y/BW	.2350	.2990	.3640	.4270	.5340	.6730	.7800	.8870	.9720	1.0000
X/CW										
.274				-.4402						
.345									-.9494	
.362		-.0222								
.390			-.4350							
.400					-.6585	-.9797		-.9306		
.402				-.5792						
.419										-.9445
.429	-.2110									
.497		-.3131								
.503									-.9565	
.547	-.1123									
.550					-.6150	-.8853				
.565				-.6570						
.600								-.9223		
.633	-.4710									
.637			-.5040							
.650							-.8666			
.670									-.8594	
.700		-.4517				-.4356				
.723										-.8563
.725					-.2842					
.727	-.4811									
.750							-.9138	-.8615		
.760				-.2436						
.775					-.7191	-.7079				
.793	-.0294									
.798			-.1769							
.808				-.6767						
.834		-.1618								
.839			-.6342							
.850					-.6818	-.4870	-.7505			
.857				-.6721						
.862									-.8525	
.865		-.5324								
.879			-.5323							
.900		-.4892			-.5976			-.3181		
.905				-.6006						
.919			-.5141							
.950					-.3383	-.3187	-.6416			
.953				-.5780						
.955			-.5366							
.965		-.6966								

AMES 11-073(OA148) -140A/B/C ORB LEFT WING TOP (XEBU79) (05 AUG 75)

REFERENCE DATA

SREF = 2690.0000 SQ.FT. XMRP = 1076.6800 IN. XO
LREF = 474.8000 IN. YMRP = .0000 IN. YO
BREF = 936.0680 IN. ZMRP = 375.0000 IN. ZO
SCALE = .0300

PARAMETRIC DATA

RUDDER = -10.000 SPDBRK = .000
BDFLAP = -11.700 L-ELVN = 10.000
R-ELVN = -10.000 MACH = .900

ALPHA (1) = -4.051 BETA (1) = -3.840 MACH = .89997 Q = 600.24 P = 1058.8 RN/L = 3.5827

SECTION (1)LEFT WING TOP SURF DEPENDENT VARIABLE CP

2Y/BW	.2350	.2990	.3640	.4270	.5340	.6730	.7800	.8870	.9720	1.0000
X/CW										
.000	-.4377	-.0387	-.0965	.1833	.4167	.3296	.2636	.2762	-1.0059	
.010		.0427	.0602		.6197	.5818	.5433	.4460		
.020		.0541		.0000	.5486	.4955	.4629	.3995	-.3905	
.040			.1717	.3934						
.041	-.0621									
.050					.3296	.2762	.2414	.1925		
.069									-.4612	
.080					.1354					
.081				.2683						
.086			.2984							
.094		.0613								
.113	.0518									
.150					-.0990	-.1426	-.1670	-.2008		
.157									-.5682	
.163			.0000							
.177				-.0117						
.229		.1669								
.246			.0767							
.247	.0831									
.250					-.3011	-.3555	-.4094	-.5073		
.274				-.1661						
.345									-.4753	
.362		.1605								
.390			-.1384							
.400					-.2250	-.3481		-.6592		
.402				-.2062						
.418										-.3516
.429	-.1671									
.497		-.0835								
.503									-.4091	
.547	.0285									
.550					-.1761	-.3470				
.565				-.0511						
.600								-.5285		
.633	-.1188									
.637			.0066							
.650							-.2239			
.670									-.6177	

AMES 11-073(OA148) -140A/B/C ORB LEFT WING TOP (XE8U79)

ALPHA (1) = -4.051 BETA (1) = -3.040

SECTION (1)LEFT WING TOP SURF DEPENDENT VARIABLE CP

2Y/BW	.2350	.2990	.3640	.4270	.5340	.6730	.7800	.8870	.9720	1.0000
X/CW										
.700		.0435				-.1422				
.723										-.3564
.725					-.1624					
.727	.0147									
.750							-.8830	-.8796		
.760				-.1797						
.775					-.8548	-.7725				
.793	.1591									
.798			-.1581							
.809				-.8438						
.834		-.1706								
.839			-.8503							
.850					-.3156	-.3262	-.2365			
.857				-.3834						
.862									-.0866	
.865		-.9263								
.879			-.4555							
.900		-.5749			-.1911			-.1703		
.905				-.1920						
.919			-.1965							
.950					-.1192	-.1755	-.1645			
.953				-.1162						
.955			-.1285							
.965		-.2639								

ALPHA (1) = -4.055 BETA (2) = .202 MACH = .89997 Q = 600.24 P = 1058.8 RN/L = 3.5827

SECTION (1)LEFT WING TOP SURF DEPENDENT VARIABLE CP

2Y/BW	.2350	.2990	.3640	.4270	.5340	.6730	.7800	.8870	.9720	1.0000
X/CW										
.000	-.4651	.0045	-.0228	.1652	.3601	.2366	.1530	.1630	-.6244	
.010		.0445	.0714		.5546	.5048	.4665	.3863		
.020		.0412		.0000	.4909	.4346	.4028	.3442	-.4173	
.040			.1538	.3392						
.041	-.0959									
.050					.2904	.2438	.2144	.1613		
.069									-.4820	
.080					.1175					
.081				.2315						
.086			.2568							
.094		.0431								
.113	.0368									
.150					-.0913	-.1236	-.1539	-.1996		

AMES 11-073(OA148) -140A/B/C ORB LEFT WING TOP (XEBU79)

ALPHA (1) = -4.055 BETA (2) = .202

SECTION (1)LEFT WING TOP SURF DEPENDENT VARIABLE CP

2Y/BW	.2350	.2990	.3640	.4270	.5340	.6730	.7800	.8870	.9720	1.0000
X/CW										
.157									-.5544	
.163			.0000							
.177				-.0024						
.229		.1456								
.246			.0668							
.247	.0618									
.250					-.2767	-.3147	-.3648	-.5012		
.274				-.1479						
.345									-.4461	
.362		.1423								
.390			-.1235							
.400					-.2175	-.3349		-.6057		
.402				-.1981						
.418										-.3329
.429	.1424									
.497		-.0889								
.503									-.3816	
.547	.0164									
.550					-.2026	-.3604				
.565				-.0809						
.500								-.5496		
.633	-.1161									
.637			-.0292							
.650							-.4198			
.670									-.6315	
.700		.0131				-.2389				
.723										-.4288
.725					-.2263					
.727	-.0094									
.750							-.7376	-.7531		
.760				-.2138						
.775					-.8851	-.7443				
.793	.1149									
.798			-.1907							
.808				-.8902						
.834		-.2079								
.839			-.9030							
.850					-.3447	-.3478	-.2824			
.857				-.3537						
.862									-.1225	
.865		-.8579								
.879			-.3943							
.900		-.5922			-.2559			-.2317		
.905				-.2343						
.919			-.2282							

AMES 11-073(OA148) -140A/B/C ORB LEFT WING TOP (XE8U79)

ALPHA (1) = -4.055 BETA (2) = .202

SECTION (1)LEFT WING TOP SURF DEPENDENT VARIABLE CP

2Y/BW	.2350	.2990	.3640	.4270	.5340	.6730	.7800	.8870	.9720	1.0000
X/CW										
.950					-.2000	-.2306	-.2236			
.953				-.1787						
.955			-.1746							
.965		-.2793								

ALPHA (1) = -4.070 BETA (3) = 4.283 MACH = .89997 Q = 600.24 P = 1058.8 RN/L = 3.5827

SECTION (1)LEFT WING TOP SURF DEPENDENT VARIABLE CP

2Y/BW	.2350	.2990	.3640	.4270	.5340	.6730	.7800	.8870	.9720	1.0000
X/CW										
.000	-.4891	.0258	.0241	.1776	.2998	.1562	.0682	.0734	- 5953	
.010		.0415	.0893		.4883	.4298	.3892	.3145		
.020		.0317		.0000	.4310	.3722	.3409	.2810	-.4683	
.040			.1435	.2984						
.041	-.1210									
.050					.2568	.2046	.1770	.1254		
.069									-.5361	
.080					.1007					
.081				.2009						
.086			.2268							
.094		.0286								
.113	.0072									
.150					-.0846	-.1286	-.1506	-.2101		
.157									-.5727	
.163			.0000							
.177				-.0051						
.229		.1293								
.246			.0526							
.247	.0609									
.250					-.2505	-.2955	-.3464	-.4817		
.274				-.1302						
.345									-.4414	
.362		.1240								
.390			-.1122							
.400					-.2140	-.3184		-.5935		
.402				-.1880						
.418										-.3358
.429	.1289									
.497		-.0544								
.503									-.4243	
.547	.0095									
.550					-.2247	-.3710				
.565				-.1090						

AMES 11-073(OA148) -140A/B/C ORB LEFT WING TOP (XE8U79)

ALPHA (1) = -4.070 BETA (3) = 4.283

SECTION : 1)LEFT WING TOP SURF DEPENDENT VARIABLE CP

2Y/BW	.2350	.2990	.3640	.4270	.5340	.6730	.7800	.8870	.9720	1.0000
X/CW										
.600								-.5749		
.633	-.1153									
.637			-.0642							
.650							-.4661			
.670									-.2932	
.700		-.0213				-.2917				
.723										-.4369
.725					-.2817					
.727	-.0353									
.750							-.5111	-.3913		
.760				-.2562						
.775					-.9112	-.7390				
.793	.0762									
.798			-.2308							
.808				-.9226						
.834		-.2547								
.839			-.935[illegible]							
.850					-.3844	-.4003	-.3074			
.857				-.3682						
.862									-.1785	
.865		-.8820								
.879			-.4253							
.900		-.5884			-.3007			-.2841		
.905				-.2849						
.919			-.2762							
.950					-.2555	-.2[illegible]74	-.2730			
.953				-.2355						
.955			-.2330							
.965		-.2674								

ALPHA (2) = .045 BETA (1) = -3.859 MACH = .89957 Q = 599.75 P = 1058.8 RN/L = 3.5771

SECTION (1)LEFT WING TOP SURF DEPENDENT VARIABLE CP

2Y/BW	.2350	.2990	.3640	.4270	.5340	.6730	.7800	.8870	.9720	1.0000
X/CW										
.000	-.3588	.0539	.1111	.3828	.5570	.4918	.4564	.4612	-.3117	
.010		.0551	.1548		.4566	.4642	.4166	.2645		
.020		.0363		.0000	.3326	.3013	.2594	.1897	-.2881	
.040			.1960	.2052						
.041	-.1383									
.050					.0670	.0114	-.0278	-.0729		
.069									-.3909	
.080					-.1562					

AMES 11-073(OA148) -140A/B/C ORB LEFT WING TOP (XE8U79)

ALPHA (2) = .045 BETA (1) = -3.859

SECTION (1)LEFT WING TOP SURF DEPENDENT VARIABLE CP

2Y/BW	.2350	.2990	.3640	.4270	.5340	.6730	.7800	.8870	.9720	1.0000
X/CW										
.081				.0436						
.086			.2278							
.094		.0149								
.113	-.0279									
.150					-.3687	-.4444	-.4654	-.4590		
.157									-.6920	
.163			.0000							
.177				-.2670						
.229		.1083								
.246			-.0958							
.247	.0302									
.250					-.5430	-.6373	-.6677	-.6813		
.274				-.3975						
.345									-.7417	
.362		.0397								
.380			-.3427							
.400					-.3576	-.6931		-.9546		
.402				-.4840						
.418										-.3152
.429	.1010									
.497		-.2514								
.503									-.8197	
.547	-.1079									
.550					-.2291	-.4082				
.565				-.1030						
.600								-.2486		
.633	-.3139									
.637			-.0420							
.650							-.1020			
.670									-.5897	
.700		-.0155				-.1112				
.723										-1.0690
.725					-.1453					
.727	-.0529									
.750							-.8996	-.8446		
.760				-.1627						
.775					-.8563	-.8052				
.793	.1126									
.798			-.1469							
.808				-.8524						
.834		-.1621								
.839			-.8449							
.850					-.2653	-.2822	-.2231			
.857				-.3002						
.862									-.3454	

AMES 11-073(OA148) -140A/B/C ORB LEFT WING TOP (XEBU79)

ALPHA (2) = .045 BETA (1) = -3.859

SECTION (1)LEFT WING TOP SURF DEPENDENT VARIABLE CP

2Y/BW	.2350	.2990	.3640	.4270	.5340	.6730	.7800	.8870	.9720	1.0000
X/CW										
.865		-.7651								
.879			-.3565							
.900		-.4905			-.1761			-.0441		
.905				-.1658						
.919			-.1775							
.950					-.1157	-.1207	-.0296			
.953				-.0957						
.955			-.1196							
.965		-.2429								

ALPHA (2) = .042 BETA (2) = .192 MACH = .89957 Q = 599.75 P = 1058.8 RN/L = 3.5771

SECTION (1)LEFT WING TOP SURF DEPENDENT VARIABLE CP

2Y/BW	.2350	.2990	.3640	.4270	.5340	.6730	.7800	.8870	.9720	1.0000
X/CW										
.000	-.4011	.0226	.0970	.3574	.5051	.4222	.3848	.3791	-.3362	
.010		.0088	.1253		.3762	.3864	.3395	.1990		
.020		-.0086		.0000	.2644	.2264	.1986	.1320	-.3469	
.040			.1586	.1517						
.041	-.1807									
.050					.0173	-.0375	-.0616	-.1059		
.069									-.4355	
.080					-.1727					
.081				.0108						
.086			.1848							
.094		-.0129								
.113	-.0302									
.150					-.3774	-.4123	-.4545	-.4702		
.157									-.7211	
.163			.0000							
.177				-.2492						
.229		.0845								
.246			-.1091							
.247	.0154									
.250					-.4937	-.6064	-.6706	-.6952		
.274				-.3751						
.345									-.7206	
.362		.0250								
.390			-.3253							
.400					-.3238	-.4295		-.9221		
.402				-.4108						
.418										-.3781
.429	.0815									

AMES 11-073(OA148) -140A/B/C ORB LEFT WING TOP (XEBU79)

ALPHA (2) = .042 BETA (2) = .192

SECTION (1)LEFT WING TOP SURF DEPENDENT VARIABLE CP

2Y/BW	.2350	.2990	.3640	.4270	.5340	.6730	.7800	.8870	.9720	1.0000
X/CW										
.497		-.2512								
.503									-.4748	
.547	-.1182									
.550					-.2528	-.4295				
.585				-.1320						
.600								-.2183		
.633	-.2974									
.637			-.0747							
.650							-.3180			
.670									-.6833	
.700		-.0402				-.1949				
.723										-1.1408
.725					-.2191					
.727	-.0728									
.750							-.8844	-.7140		
.760				-.2025						
.775					-.8909	-.8133				
.793	.0733									
.798			-.1876							
.808				-.9050						
.834		-.1948								
.839			-.8953							
.850					-.3039	-.3127	-.2592			
.857				-.3140						
.882									-.3607	
.885		-.7815								
.893			-.3578							
.900		-.5262			-.2430			-.1929		
.905				-.2326						
.919			-.2311							
.950					-.1871	-.1825	-.1414			
.953				-.1757						
.955			-.1874							
.965		-.2583								

AMES 11-073(OA148) -140A/B/C ORB LEFT WING TOP (XEBU79)

ALPHA (2) = .032 BETA (3) = 4.260 MACH = .89957 Q = 599.75 P = 1058.8 RN/L = 3.5771

SECTION (1)LEFT WING TOP SURF DEPENDENT VARIABLE CP

2Y/BW	.2350	.2990	.3640	.4270	.5340	.6730	.7800	.8870	.9720	1.0000
X/CW										
.000	-.4459	-.0302	.0614	.3172	.4552	.3676	.3228	.3079	-.3238	
.010		-.0423	.0878		.3021	.2982	.2500	.1106		
.020		-.0435		.0000	.1988	.1536	.1135	.0476	-.4011	
.040			.1268	.0990						
.041	-.3668									
.050					-.0226	-.0805	-.1162	-.1781		
.069									-.4850	
.080					-.1913					
.081				-.0173						
.086			.1534							
.094		-.0209								
.113	-.0430									
.150					-.3644	-.4169	-.4568	-.4905		
.157									-.7482	
.163			.0000							
.177				-.2289						
.229		.0725								
.246			-.1093							
.247	.0103									
.250					-.4817	-.5927	-.6583	-.7175		
.274				-.3023						
.345									-.6633	
.362		.0157								
.390			-.2740							
.400					-.3091	-.4343		-.7784		
.402				-.3630						
.418										-.4553
.429	.0688									
.497		-.2395								
.503									-.3124	
.547	-.1150									
.550					-.2755	-.4472				
.565				-.1568						
.600								-.3968		
.633	-.2643									
.637			-.1051							
.650							-.4587			
.670									-.7030	
.700		-.0670				-.2952				
.723										-1.2212
.725					-.2835					
.727	-.0865									
.750							-.9240	-.4470		
.750				-.2443						
.775					-.9233	-.8772				

AMES 11-073(OA148) -140A/B/C ORB LEFT WING TOP (XEBU79)

ALPHA (2) = .032 BETA (3) = 4.260

SECTION (1)LEFT WING TOP SURF DEPENDENT VARIABLE CP

2Y/BW	.2350	.2990	.3640	.4270	.5340	.6730	.7800	.8870	.9720	1.0000
X/CW										
.793	.0366									
.798			-.2303							
.809				-.9366						
.834		-.2429								
.839			-.9258							
.850					-.3831	-.3886	-.2956			
.857				-.3828						
.862									-.3961	
.865		-.8218								
.879			-.4312							
.900		-.6212			-.3190			-.3226		
.905				-.2853						
.919			-.2896							
.950					-.2778	-.2395	-.2131			
.953				-.2461						
.955			-.2592							
.965		-.3186								

ALPHA (3) = 4.023 BETA (1) = -3.861 MACH = .90070 Q = 600.44 P = 1057.3 RN/L = 3.5793

SECTION (1)LEFT WING TOP SURF DEPENDENT VARIABLE CP

2Y/BW	.2350	.2990	.3640	.4270	.5340	.6730	.7800	.8870	.9720	1.0000
X/CW										
.000	-.2839	-.0358	.0534	.4083	.6175	.5750	.5521	.4884	-.1953	
.010		-.0848	.0622		.1603	.2081	.0978	-.1515		
.020		-.0900		.0000	.0295	-.0179	-.0922	-.2299	-.5674	
.040			.1066	-.0484						
.041	-.1682									
.050					-.2527	-.3353	-.3990	-.4974		
.069									-.6479	
.080					-.4737					
.081				-.2322						
.086			.1007							
.094		-.0560								
.113	-.1029									
.150					-.7035	-.7409	-.7519	-.7431		
.157									-.9287	
.163			.0000							
.177				-.4761						
.229		.0530								
.245			-.2675							
.247	-.0088									
.250					-.7718	-.9336	-.9763	-.9539		

AMES 11-073(OA148) -140A/B/C ORB LEFT WING TOP (XEBU79)

ALPHA (3) = 4.023 BETA (1) = -3.851

SECTION (1)LEFT WING TOP SURF DEPENDENT VARIABLE CP

2Y/BW	.2350	.2990	.3640	.4270	.5340	.6730	.7800	.8870	.9720	1.0000
X/CW										
.274				-.6062						
.345									-.9411	
.362		-.0657								
.390			-.5426							
.400					-.8747	-1.0243		-1.0329		
.402				-.7291						
.418										-.8295
.429	.0508									
.497		-.4258								
.503									-.7509	
.547	-.2231									
.550					-.2883	-.6848				
.565				-.1991						
.600								-.6752		
.633	-.5186									
.637			-.1355							
.650							-.6189			
.670									-.5180	
.700		-.1366				-.1090				
.723										-.5195
.725					-.1757					
.727	-.1843									
.750							-.5218	-.4993		
.760				-.1592						
.775					-.8247	-.8208				
.793	.0911									
.798			-.1481							
.808				-.8254						
.834		-.1599								
.839			-.8134							
.850					-.2798	-.2554	-.3496			
.857				-.3233						
.862									-.5230	
.865		-.8047								
.879			-.3434							
.900		-.4608			-.1261			-.4703		
.905				-.1302						
.919			-.1511							
.950					-.0312	-.0736	-.1676			
.953				-.0492						
.955			-.0847							
.965		-.2122								

AMES 11-073(OA148) -140A/B/C ORB LEFT WING TOP (XEBU79)

ALPHA (3) = 4.017 BETA (2) = .197 MACH = .90070 Q = 600.44 P = 1057.3 RN/L = 3.5783

SECTION (1)LEFT WING TOP SURF DEPENDENT VARIABLE CP

Y/SW	.2350	.2990	.3640	.4270	.5340	.6730	.7800	.8870	.9720	1.0000
X CW										
.000	-.3589	-.1437	-.0564	.3141	.5285	.4881	.4559	.3817	-.3378	
.010		-.1767	-.0210		.0512	.0922	-.0132	-.2476		
.020		-.1593		.0000	-.0672	-.1132	-.1925	-.3270	-.6649	
.040			.0446	-.1093						
.060	-.3934									
.080					-.3119	-.4007	-.4692	-.5611		
.090									-.7241	
.095					-.5116					
.100				-.2732						
.108			.0520							
.094		-.0793								
.113	-.1055									
.130					-.7184	-.7666	-.7880	-.7809		
.157									-.9701	
.163			.0000							
.177				-.4841						
.229		.0322								
.246			-.2820							
.247	-.0278									
.260					-.7517	-.9171	-.9843	-.9798		
.274				-.5939						
.345									-1.0569	
.362		-.0800								
.390			-.5365							
.400					-.7813	-.9967		-1.148.		
.402				-.6938						
.418										-1.0195
.429	.0264									
.497		-.4242								
.503									-.8862	
.507	-.2382									
.550					-.3071	-.3759				
.565				-.2044						
.600								-.7043		
.633	-.5234									
.637			-.1511							
.640							-.2831			
.645									-.6414	
.655		-.1912				-.1625				
.670										-.6407
.675					-.2287					
.677	-.1745									
.700							-.7980	-.5953		
.760				-.2168						
.775					-.9099	-.9562				

AMES 11-073(OA148) -140A/B/C ORB LEFT WING TOP (XEBU79)

ALPHA (3) = 4.017 BETA (2) = .197

SECTION (1)LEFT WING TOP SURF DEPENDENT VARIABLE CP

2Y/BW	.2350	.2990	.3640	.4270	.5340	.6730	.7800	.8870	.9720	1.0000
X/CW										
.793	.0662									
.798			-.1907							
.838				-.8609						
.834		-.2176								
.839			-.8878							
.853					-.2920	-.2647	-.2215			
.857				-.3140						
.862									-.6528	
.865		-.8987								
.873			-.3595							
.900		-.5637			-.2057			-.4831		
.905				-.2087						
.919			-.2337							
.950					-.1440	-.1555	-.0417			
.953				-.1512						
.955			.1732							
.965		-.2315								

ALPHA (3) = 4.017 BETA (3) = 4.251 MACH = .90070 Q = 600.44 P = 1057.3 RN/L = 3.5793

SECTION (1)LEFT WING TOP SURF DEPENDENT VARIABLE CP

2Y/BW	.2350	.2990	.3640	.4270	.5340	.6730	.7800	.8870	.9720	1.0000
X/CW										
.000	-.4188	-.2723	-.1562	.1941	.4330	.3826	.3464	.2589	-.5587	
.010		-.2594	-.0616		-.0620	-.0351	-.1552	-.3923		
.020		-.2004		.0000	-.1600	-.2267	-.3114	-.4782	-.8078	
.040			.0176	-.1608						
.041	-.4990									
.050					-.3741	-.4768	-.5572	-.6667		
.069									-.8221	
.080					-.5431					
.081				-.2913						
.086			.0259							
.094		-.0934								
.113	-.1055									
.150					-.7171	-.7900	-.8116	-.8335		
.157									-1.0262	
.163			.0000							
.177				-.4760						
.229		.0032								
.245			-.2610							
.247	-.0282									
.250					-.7197	-.8539	-.9873	-1.0087		

AMES 11-073(OA148) -140A/B/C ORB LEFT WING TOP (XE8U79)

ALPHA (3) = 4.017 BETA (3) = 4.251

SECTION (1)LEFT WING TOP SURF DEPENDENT VARIABLE CP

2Y/BW	.2350	.2990	.3640	.4270	.5340	.6730	.7800	.8870	.9720	1.0000
X/CW										
.274				-.5636						
.345									-1.1088	
.362		-.0910								
.390			-.5124							
.400					-.6369	-.9314		-1.1310		
.402				-.6174						
.418										-1.2754
.439	.0236									
.497		-.4193								
.503									-1.1309	
.547	-.2250									
.550					-.3241	-.4599				
.565				-.2289						
.600								-.6622		
.633	-.4797									
.637			-.1239							
.650							-.3516			
.670									-1.0189	
.700		-.1181				-.2785				
.703										-.9788
.705					-.3021					
.727	-.1607									
.750							-.8709	-.7409		
.760				-.2461						
.775					-.9518	-.7795				
.793	.0196									
.798			-.2307							
.808				-.9285						
.834		-.2495								
.839			-.9614							
.850					-.3473	-.3152	-.3064			
.857				-.3957						
.862									-.8661	
.865		-.8735								
.879			-.4785							
.900		-.6674			-.2995			-.3256		
.905				-.2807						
.919			-.3031							
.950					-.2578	-.2325	-.0566			
.953				-.2567						
.955			-.2575							
.95		-.3633								

AMES 11-073(OA148) -140A/B/C ORB LEFT WING TOP (XE8U79)

ALPHA (4) = 7.937 BETA (1) = -3.857 MACH = .90017 Q = 600.17 P = 1058.1 RN/L = 3.5825

SECTION (1)LEFT WING TOP SURF DEPENDENT VARIABLE CP

2Y/BW	.2350	.2990	.3640	.4270	.5340	.6730	.7800	.8870	.9720	1.0000
X/CW										
.000	-.2605	-.2976	-.2875	.2027	.4845	.4589	.4182	.2871	-.6125	
.010		-.3767	-.2070		-.2807	-.1912	-.3405	-.5975		
.020		-.3131		.0000	-.3842	-.4098	-.4976	-.7053	-.9866	
.040			-.1013	-.3862						
.041	-.2116									
.050					-.5987	-.6586	-.7576	-.9009		
.059									-.7759	
.080					-.7815					
.081				-.5386						
.086			-.0785							
.094		-.1451								
.113	-.1584									
.150					-.9962	-1.0473	-1.0721	-.9909		
.157									-.7158	
.163			.0000							
.177				-.6721						
.229		-.0076								
.246			-.4341							
.247	-.0716									
.250					-1.0107	-1.1590	-.9982	-.9750		
.274				-.7643						
.345									-.7163	
.362		-.1558								
.390			-.6583							
.400					-1.0255	-1.0016		-.9054		
.402				-.9005						
.418										-.7215
.429	.0029									
.497		-.5368								
.503									-.6925	
.547	-.3390									
.550					-.4579	-.8062				
.565				-.4190						
.600								-.6838		
.633	-.6881									
.637			-.1963							
.650							-.6606			
.670									-.5856	
.700		-.2636				-.6386				
.723										-.5692
.725					-.3048					
.727	-.3782									
.750							-.5551	-.5994		
.760				-.1671						
.775					-.8408	-.5821				

DATE 11 FEB 76 TABULATED PRESSURE DATA - OA148 (AMES 11-073-1)

AMES 11-073(OA148) -140A/B/C ORB LEFT WING TOP (XE8U79)

ALPHA (4) = 7.937 BETA (1) = -3.857

SECTION (1)LEFT WING TOP SURF DEPENDENT VARIABLE CP

2Y/BW	.2350	.2990	.3640	.4270	.5340	.6730	.7800	.8870	.9720	1.0000
X/CW										
.793	.1009									
.798			-.1524							
.808				-.8171						
.834		-.1608								
.839			-.8779							
.850					-.4135	-.3717	-.5173			
.857				-.5988					-.5816	
.862										
.865		-.8731								
.879			-.6451							
.900		-.6059			-.2172			-.5851		
.905				-.2146						
.919			-.2695							
.950					-.0934	-.2750	-.4741			
.953				-.0688						
.955			-.1491							
.965		-.2336								

ALPHA (4) = 7.934 BETA (2) = .192 MACH = .90017 Q = 600.17 P = 1058.1 RN/L = 3.5825

SECTION (1)LEFT WING TOP SURF DEPENDENT VARIABLE CP

2Y/BW	.2350	.2990	.3640	.4270	.5340	.6730	.7800	.8870	.9720	1.0000
X/CW										
.000	-.3466	-.4943	-.3868	.0327	.3479	.3339	.2808	.1443	-.8738	
.010		-.4838	-.1959		-.4147	-.3254	-.4778	-.7381		
.020		-.3593		.0000	-.4875	-.5209	-.6120	-.8059	-.9428	
.040			-.0766	-.4341						
.041	-.4045									
.050					-.6631	-.7414	-.8473	-.9964		
.069									-.7410	
.080					-.8175					
.081				-.5694						
.086			-.0678							
.094		-.1949								
.113	-.1902									
.130					-.9636	-1.0778	-1.1153	-1.0471		
.157									-.7241	
.163			.0000							
.177				-.6566						
.229		-.1186								
.245			-.4258							
.247	-.0688									
.250					-.9839	-1.1955	-1.0463	-1.0302		

DATE 11 FEB 75 TABULATED PRESSURE DATA - OA148 (AMES 11-073-1)

AMES 11-073(OA148) -140A/B/C ORB LEFT WING TOP (XEBU79)

ALPHA (4) = 7.934 BETA (2) = .192

SECTION (1)LEFT WING TOP SURF DEPENDENT VARIABLE CP

2Y/BW	.2350	.2990	.3640	.4270	.5340	.6730	.7800	.8870	.9720	1.0000
X/CW										
.274				-.7331						
.345									-.7286	
.362		-.1816								
.390			-.6563							
.400					-1.0090	-1.0453		-.9160		
.402				-.6665						
.418										-.7212
.429	-.0042									
.497		-.5604								
.503									-.7136	
.547	-.3518									
.550					-.4378	-.7590				
.565				-.3573						
.600								-.7011		
.633	-.7001									
.637			-.2478							
.650							-.6798			
.670									-.6120	
.700		-.2191				-.5881				
.723										-.6009
.725					-.2702					
.727	-.3557									
.750							-.5961	-.6242		
.760				-.1826						
.775					-.8853	-.6608				
.793	.0228									
.798			-.1958							
.808				-.8888						
.834		-.1875								
.839			-.9468							
.850					-.5889	-.3598	-.5447			
.857				-.7937						
.862									-.5982	
.865		-.8244								
.879			-.7384							
.900		-.6706			-.2764			-.6052		
.905				-.3109						
.919			-.3560							
.950					-.1211	-.2234	-.5012			
.953				-.1344						
.955			-.1849							
.965		-.3411								

AMES 11-073(OA148) -140A/B/C ORB LEFT WING TOP (XEBU79)

ALPHA (4) = 7.926 BETA (3) = 4.250 MACH = .90017 Q = 600.17 P = 1058.1 RN/L = 3.5825

SECTION (1)LEFT WING TOP SURF DEPENDENT VARIABLE CP

2Y/BW	.2350	.2990	.3640	.4270	.5340	.6730	.7800	.8870	.9720	1.0000
X/CW										
.000	-.4395	-.5860	-.2363	-.1257	.2057	.1810	.1212	-.0247	-.9099	
.010		-.3928	-.1700		-.5308	-.4897	-.6509	-.8958		
.020		-.3417		.0000	-.5991	-.6404	-.7628	-.9639	-.8283	
.040			-.1399	-.3934						
.041	-.5330									
.050					-.7068	-.8308	-.9452	-1.1074		
.069									-.7921	
.080					-.8283					
.081				-.4721						
.085			-.1543							
.094		-.3212								
.113	-.2119									
.150					-.9081	-1.1063	-1.1655	-1.1412		
.157									-.7604	
.163			.0000							
.177				-.5975						
.229		-.2287								
.246			-.5291							
.247	-.0909									
.250					-.9076	-1.1845	-1.1117	-1.1191		
.274				-.6968						
.345									-.7686	
.362		-.1116								
.390			-.6962							
.400					-.9334	-1.0640		-.7833		
.402				-.8321						
.418										-.7538
.429	-.0198									
.497		-.5380								
.503									-.7707	
.547	-.3443									
.550					-.4463	-.7404				
.565				-.3381						
.600								-.7455		
.633	-.6590									
.637			-.2712							
.650							-.6811			
.670									-.6535	
.700		-.2532				-.4086				
.723										-.6524
.725					-.2271					
.727	-.3032									
.750							-.6925	-.6902		
.750				-.2543						
.775					-.9343	-.8114				

AMES 11-073(OA148) -140A/B/C ORB LEFT WING TOP (XEBU79)

ALPHA (4) = 7.926 BETA (3) = 4.250

SECTION (1)LEFT WING TOP SURF DEPENDENT VARIABLE CP

2Y/BW	.2350	.2990	.3640	.4270	.5340	.6730	.7800	.8870	.9720	1.0000
X/CW										
.793	-.0431									
.798			-.2182							
.808				-.9890						
.834		-.2440								
.839			-.8802							
.850					-.7881	-.4999	-.6225			
.857				-.8855						
.862									-.6564	
.865		-.8130								
.879			-.7793							
.900		-.6680			-.3054			-.6536		
.905				-.3302						
.919			-.1739							
.950					-.1982	-.2848	-.5421			
.953				-.2160						
.955			-.2636							
.965		-.3775								

ALPHA (5) = 11.969 BETA (1) = -3.847 MACH = .89890 Q = 599.14 P = 1059.2 RN/L = 3.5769

SECTION (1)LEFT WING TOP SURF DEPENDENT VARIABLE CP

2Y/BW	.2350	.2990	.3640	.4270	.5340	.6730	.7800	.8870	.9720	1.0000
X/CW										
.000	-.2760	-.6957	-.5148	-.1815	.2200	.2059	.1495	-.0120	-.8524	
.010		-.6751	-.2514		-.7166	-.6224	-.7819	-.9987		
.020		-.5826		.0000	-.8390	-.8058	-.9285	-.9182	-.7524	
.040			-.1860	-.6507						
.041	-.2684									
.050					-.9742	-1.0148	-1.0389	-.9320		
.069									-.6970	
.080					-1.0664					
.081				-.7349						
.086			-.1753							
.094		-.3751								
.113	-.2560									
.150					-1.1642	-1.1231	-.9513	-.9033		
.157									-.6791	
.163			.0000							
.177				-.7839						
.220		-.2629								
.245			-.5571							
.247	-.1069									
.250					-1.0950	-1.0553	-.8671	-.7929		

AMES 11-073(OA148) -140A/B/C ORB LEFT WING TOP (XEBU79)

ALPHA (5) = 11.969 BETA (1) = -3.847

SECTION (1)LEFT WING TOP SURF DEPENDENT VARIABLE CP

2Y/BW	.2350	.2990	.3640	.4270	.5340	.6730	.7800	.8870	.9720	1.0000
X/CW										
.274				-.8448						
.345									-.6910	
.352		-.3718								
.390			-.7709							
.400					-.8917	-.8511		-.7013		
.402				-.9226						
.418										-.6694
.429	-.0228									
.497		-.7583								
.503									-.6974	
.547	-.4855									
.550					-.7400	-.8239				
.565				-.5183						
.600								-.6793		
.633	-.8310									
.637			-.3517							
.650							-.7322			
.670									-.5970	
.700		-.2881				-.7400				
.723										-.5832
.725					-.5410					
.727	-.3023									
.750							-.6724	-.6066		
.760				-.2538						
.775					-.9156	-.6679				
.793	.0454									
.798			-.2557							
.808				-.9866						
.834		-.2203								
.839			-.9952							
.850					-.4693	-.5384	-.6427			
.857				-.6537						
.862									-.5863	
.865		-.7706								
.879			-.8443							
.900		-.7060			-.4360			-.6087		
.905				-.3605						
.919			-.4161							
.950					-.3469	-.4831	-.6179			
.953				-.2446						
.955			-.2633							
.965		-.3668								

AMES 11-073(OA148) -140A/B/C ORB LEFT WING TOP (XE8U79)

ALPHA (5) = 11.976 BETA (2) = .196 MACH = .89890 Q = 599.14 P = 1059.2 RN/L = 3.5769

SECTION (1)LEFT WING TOP SURF DEPENDENT VARIABLE CP

2Y/BW	.2350	.2990	.3640	.4270	.5340	.6730	.7800	.8870	.9720	1.0000
X/CW										
.000	-.3944	-.7781	-.3345	-.3612	.0509	.0346	-.0263	-.1814	-.8858	
.010		-.5370	-.2784		-.8603	-.7638	-.9165	-.9530		
.020		-.4949		.0000	-.9726	-.9497	-1.0683	-.8193	-.7729	
.040			-.2720	-.5262						
.041	-.4563									
.050					-1.0741	-1.1168	-1.1126	-.7934		
.069									-.7193	
.080					-1.1150					
.081				-.6148						
.086			-.2651							
.094		-.4787								
.113	-.2809									
.150					-1.2032	-1.1282	-1.0206	-.7745		
.157									-.6921	
.163			.0000							
.177				-.7253						
.229		-.5853								
.246			-.5760							
.247	-.1771									
.250					-1.0528	-.9795	-.9108	-.7655		
.274				-.8305						
.345									-.6995	
.362		-.2918								
.390			-.7769							
.400					-.8844	-.9018		-.7424		
.402				-.9710						
.418										-.6934
.429	-.0672									
.497		-.7357								
.503									-.7138	
.547	-.4975									
.550					-.7102	-.8421				
.565				-.4164						
.600								-.7005		
.633	-.8419									
.637			-.3583							
.650							-.7398			
.670									-.6185	
.700		-.2580				-.7213				
.723										-.6034
.725					-.4158					
.727	-.3267									
.750							-.7009	-.6440		
.760				-.2905						
.775					-1.0176	-.6686				

AMES 11-073(OA148) -140A/B/C ORB LEFT WING TOP (XEBU79)

ALPHA (5) = 11.976 BETA (2) = .196

SECTION (1)LEFT WING TOP SURF DEPENDENT VARIABLE CP

2Y/BW	.2350	.2990	.3640	.4270	.5340	.6730	.7800	.8870	.9720	1.0000
X/CW										
.793	.0251									
.798			-.2745							
.808				-1.0388						
.834		-.2530								
.839			-.9046							
.850					-.4640	-.5152	-.6662			
.857				-.9229						
.862									-.6139	
.865		-.7600								
.879			-.8112							
.900		-.6915			-.3418			-.6292		
.905				-.4471						
.919			-.7315							
.930					-.2671	-.4724	-.6529			
.953				-.2675						
.955			-.3231							
.965		-.5353								

ALPHA (5) = 11.956 BETA (3) = 4.265 MACH = .89890 Q = 599.14 P = 1059.2 RN/L = 3.5769

SECTION (1)LEFT WING TOP SURF DEPENDENT VARIABLE CP

2Y/BW	.2350	.2990	.3640	.4270	.5340	.6730	.7800	.8870	.9720	1.0000
X/CW										
.000	-.4956	-.7642	-.3528	-.5194	-.1256	-.1457	-.2138	-.3760	-.8544	
.010		-.6357	-.3260		-.9950	-.9228	-1.0713	-.8757		
.020		-.6508		.0000	-1.0838	-1.0844	-1.0556	-.8774	-.7786	
.040			-.3146	-.4435						
.041	-.6110									
.050					-1.1299	-1.2131	-.9714	-.8386		
.069									-.7507	
.080					-1.1022					
.081				-.5462						
.086			-.3025							
.094		-.6084								
.113	-.2303									
.150					-1.0720	-1.1143	-.8539	-.7871		
.157									-.7471	
.163			.0000							
.177				-.6532						
.209		-.6550								
.246			-.6039							
.247	-.2481									
.250					-.9818	-.9834	-.8239	-.7878		

AMES 11-073(OA148) -140A/B/C ORB LEFT WING TOP (XEBU79)

ALPHA (5) = 11.956 BETA (3) = 4.265

SECTION (1)LEFT WING TOP SURF DEPENDENT VARIABLE CP

2Y/BW	.2350	.2990	.3640	.4270	.5340	.6730	.7800	.8870	.9720	1.0000
X/CW										
.274				-.7957						
.345									-.7449	
.362		-.2831								
.390			-.7983							
.400					-.6950	-.8497		-.7724		
.402				-.9570						
.418										-.7369
.429	-.0928									
.497		-.7077								
.503									-.7633	
.547	-.4596									
.550					-.6143	-.8165				
.565				-.3821						
.600								-.7578		
.633	-.8308									
.637			-.3027							
.650							-.7821			
.670									-.6722	
.700		-.2399				-.7473				
.723										-.6492
.725					-.3918					
.727	-.2665									
.750							-.7473	-.6871		
.760				-.3688						
.775					-1.0961	-.8347				
.793	.0159									
.798			-.2978							
.808				-1.0521						
.834		-.2672								
.839			-.9555							
.850					-.8495	-.5577	-.7042			
.857				-.9375						
.862									-.6393	
.865		-.7874								
.879			-.7928							
.900		-.7450			-.4921			-.6630		
.905				-.7292						
.919			-.7878							
.950					-.3885	-.4326	-.6568			
.953				-.4061						
.955			-.5102							
.965		-.7808								

AMES 11-073(OA148) -140A/B/C ORB LEFT WING TOP (XEBUBO) (05 AUG 75)

REFERENCE DATA

SREF = 2690.0000 SQ.FT. XMRP = 1076.6800 IN. XO
LREF = 474.8000 IN. YMRP = .0000 IN. YO
BREF = 936.0680 IN. ZMRP = 375.0000 IN. ZO
SCALE = .0300

PARAMETRIC DATA

RUDDER = -10.000 SPDBRK = .000
BDFLAP = -11.700 L-ELVN = 10.000
R-ELVN = -10.000 MACH = .600

ALPHA (1) = -4.078 BETA (1) = -7.858 MACH = .59728 Q = 595.86 P = 2386.0 RN/L = 4.8298

SECTION : 11LEFT WING TOP SURF DEPENDENT VARIABLE CP

2Y/BW	.2350	.2990	.3640	.4270	.5340	.6730	.7800	.8870	.9720	1.0000
X/CW										
.000	-.1542	-.1516	-.2847	-.0958	.1387	.0546	.0283	.1317	-.7080	
.010		-.0142	-.0473		.5898	.5924	.5705	.5018		
.020		.0254		.0000	.5330	.5223	.4949	.4554	-.0947	
.043			.1007	.3514						
.047	.0280									
.050					.3057	.2854	.2563	.2149		
.069									-.1299	
.080					.1061					
.081				.2149						
.086			.2518							
.094		.0508								
.113	.0435									
.150					-.1246	-.1537	-.2113	-.1865		
.157									-.2079	
.163			.0000							
.177				-.0467						
.229		.1397								
.246			.0183							
.247	.0760									
.250					-.2814	-.3405	-.3935	-.4458		
.274				-.1811						
.345									-.2391	
.362		.0921								
.390			-.1478							
.400					-.2481	-.3289		-.4053		
.402				-.2046						
.418										-.3377
.429	.1062									
.497		-.1045								
.503									-.3252	
.547	-.0209									
.550					-.1987	-.2771				
.565				-.1041						
.600								-.3271		
.633	-.1163									
.637			-.0585							
.650							-.2834			
.670									-.3122	

DATE 11 FEB 76 TABULATED PRESSURE DATA - OA148 (AMES 11-073-1)

AMES 11-073(OA148) -140A/B/C ORB LEFT WING TOP (XEBU80)

ALPHA (1) = -4.078 BETA (1) = -7.858

SECTION (1)LEFT WING TOP SURF DEPENDENT VARIABLE CP

2Y/BW	.2350	.2990	.3640	.4270	.5340	.6730	.7800	.8870	.9720	1.0000
X/CW										
.700		-.0152				-.2380				
.723										-.2075
.725					-.2259					
.727	-.0305									
.750							-.4297	-.2975		
.760				-.2304						
.775					-.5116	-.3503				
.793	.0956									
.798			-.1981							
.808				-.3432						
.834		-.1924								
.839			-.3200							
.850					-.1266	-.1053	-.1060			
.857				-.1553						
.862									-.0833	
.865		-.4813								
.879			-.1689							
.900		-.2440			-.0616			-.0446		
.905				-.0849						
.919			-.1184							
.950					.0048	-.0148	.0170			
.953				-.0227						
.955			-.0761							
.965		-.1466								

ALPHA (1) = -4.062 BETA (2) = -3.836 MACH = .59728 Q = 595.86 P = 2386.0 RN/L = 4.[illegible]

SECTION (1)LEFT WING TOP SURF DEPENDENT VARIABLE CP

2Y/BW	.2350	.2990	.3640	.4270	.5340	.6730	.7800	.8870	.9720	1.0000
X/CW										
.000	-.1611	-.1067	-.2039	-.0494	.1042	.0072	-.0289	.0646	-.6833	
.010		-.0155	-.0305		.5237	.5163	.4925	.4304		
.020		.0059		.0000	.4694	.4579	.4278	.3814	-.1625	
.040			.0834	.3012						
.041	-.0140									
.050					.2610	.2363	.2107	.1680		
.069									-.1856	
.090					.0761					
.081				.1778						
.085			.2137							
.094		.0163								
.113	.0088									
.150					-.1428	-.1665	-.2026	-.2087		

AMES 11-073(OA148) -140A/B/C ORB LEFT WING TOP (XEBU80)

ALPHA (1) = -4.062 BETA (2) = -3.836

SECTION (1)LEFT WING TOP SURF DEPENDENT VARIABLE CP

2Y/BW	.2350	.2990	.3640	.4270	.5340	.6730	.7800	.8870	.9720	1.0000
X/CW										
.157									-.2359	
.163			.0000							
.177				-.0670						
.223		.1122								
.246			-.0057							
.247	.0437									
.250					-.2898	-.3458	-.3957	-.4399		
.274				-.1977						
.345									-.2352	
.362		.0692								
.390			-.1756							
.400					-.2718	-.3439		-.4134		
.402				-.2319						
.418										-.3243
.429	.0352									
.497		-.1328								
.503									-.3056	
.547	-.0424									
.550					-.2321	-.3002				
.565				-.1457						
.600								-.3263		
.633	-.1479									
.637			-.1006							
.650							-.2951			
.670									-.2766	
.700		-.0559				-.2506				
.723										-.2213
.725					-.2565					
.727	-.0740									
.750							-.4335	-.2914		
.750				-.2572						
.775					-.5410	-.3690				
.793	.0480									
.798			-.2213							
.808				-.3797						
.824		-.2170								
.829			-.3575							
.850					-.1433	-.1238	-.1138			
.857				-.1797						
.862									-.0659	
.875		-.5053								
.879			-.1967							
[illegible]		-.2631			-.0753			-.0593		
[illegible]				-.1026						
.919			-.1339							

AMES 11-073(OA148) -14OA/B/C ORB LEFT WING TOP (XE8U80)

ALPHA (1) = -4.062 BETA (2) = -3.836

SECTION (1)LEFT WING TOP SURF DEPENDENT VARIABLE CP

2Y/BW	.2350	.2990	.3640	.4270	.5340	.6730	.7800	.8670	.9720	1.0000
X/CW										
.950					-.0026	-.0231	.0083			
.953				-.0395						
.955			-.0835							
.965		-.1590								

ALPHA (1) = -4.061 BETA (3) = .183 MACH = .59728 Q = 595.86 P = 2386.0 RN/L = 4.8298

SECTION (1)LEFT WING TOP SURF DEPENDENT VARIABLE CP

2Y/BW	.2350	.2990	.3640	.4270	.5340	.6730	.7800	.8870	.9720	1.0000
X/CW										
.000	-.1643	-.0555	-.1193	.0030	.0913	-.0367	-.0982	-.0147	- 6540	
.010		-.0082	-.0046		.4599	.4391	.4169	.3629		
.020		-.0037		.0000	.4114	.3907	.3675	.3190	-.2314	
.040			.0750	.2452						
.041	-.0620									
.050					.2113	.1904	.1651	.1287		
.069									-.2377	
.080					.0405					
.081				.1422						
.086			.1803							
.094		-.0087								
.113	-.0250									
.150					-.1548	-.1844	-.2119	-.2194		
.157									-.2646	
.163			.0000							
.177				-.0766						
.229		.0835								
.246			-.0238							
.247	.0191									
.250					-.3021	-.3566	-.3975	-.4320		
.274				-.2094						
.345									-.2335	
.362		.0511								
.390			-.1819							
.400					-.2956	-.3566		-.4123		
.402				-.2542						
.418										-.2952
.429	.0672									
.497		-.1545								
.503									-.2829	
.547	-.0634									
.550					-.2824	-.3297				
.565				-.1832						

AMES 11-073(OA148) -140A/B/C ORB LEFT WING TOP (XE8U8D)

ALPHA (1) = -4.061 BETA (3) = .183

SECTION (1)LEFT WING TOP SURF DEPENDENT VARIABLE CP

2Y/BW	.2350	.2990	.3640	.4270	.5340	.6730	.7800	.8870	.9720	1.0000
X/CW										
.600								-.3206		
.633	-.1772									
.637			-.1392							
.650							-.3026			
.670									-.2474	
.700		-.0964				-.2687				
.723										-.2284
.725					-.2802					
.727	-.1091									
.750							-.4310	-.2708		
.760				-.2804						
.775					-.5732	-.3887				
.793	.0104									
.798			-.2417							
.838				-.4125						
.834		-.2380								
.839			-.3757							
.850					-.1674	-.1347	-.1286			
.857				-.2011						
.862									-.0544	
.865		-.5273								
.879			-.2145							
.900		-.2714			-.0876			-.0819		
.905				-.1166						
.919			-.1413							
.950					-.0116	-.0258	-.0065			
.953				-.0448						
.955			-.0943							
.965		-.1662								

ALPHA (1) = -3.963 BETA (4) = 4.258 MACH = .59728 Q = 595.86 P = 2386.0 RN/L = 4.8298

SECTION (1)LEFT WING TOP SURF DEPENDENT VARIABLE CP

2Y/BW	.2350	.2990	.3640	.4270	.5340	.6730	.7800	.8870	.9720	1.0000
X/CW										
.000	-.1698	-.0321	-.0483	.0487	.0982	-.0261	-.0908	-.0109	-.5091	
.010		-.0149	.0104		.3915	.3723	.3472	.2815		
.020		-.0172		.0000	.3447	.3194	.2869	.2449	-.2516	
.040			.0707	.1997						
.041	-.0956									
.050					.1632	.1351	.1029	.0651		
.069									-.2676	
.080					.0079					

AMES 11-073(OA148) -140A/B/C ORB LEFT WING TOP (XE8U8D)

ALPHA (1) = -3.963 BETA (4) = 4.258

SECTION (1)LEFT WING TOP SURF DEPENDENT VARIABLE CP

2Y/BW	.2350	.2990	.3640	.4270	.5340	.6730	.7800	.8870	.9720	1.0000
X/CW										
.081				.1085						
.086			.1523							
.094		-.0241								
.113	-.0515									
.150					-.1749	-.2145	-.2353	-.2566		
.157									-.2752	
.163			.0000							
.177				-.0953						
.229		.0704								
.246			-.0449							
.247	.0058									
.250					-.3198	-.3675	-.4104	-.4434		
.274				-.2214						
.345									-.2330	
.362		.0376								
.390			-.1937							
.400					-.3108	-.3744		-.4159		
402				-.2765						
.418										-.1986
.429	.0502									
.497		-.1696								
.503									-.2690	
.547	-.0782									
.550					-.2878	-.3340				
.565				-.2146						
.600								-.3080		
.633	-.2005									
.637			-.1801							
.650							-.3077			
.670									-.2234	
.700		-.1315				-.2804				
.723										-.2736
.725					-.2973					
.727	-.1461									
.750							-.4247	-.2521		
.760				-.2948						
.775					-.5937	-.4025				
.793	-.0203									
.798			-.2631							
.808				-.4310						
.834		-.2601								
.839			-.3971							
.850					-.1771	-.1490	-.1284			
.857				-.2115						
.862									-.0551	

DATE 11 FEB 76 TABULATED PRESSURE DATA - OA14E (AMES 11-073-1)

AMES 11-073(OA148) -140A/B/C ORB LEFT WING TOP (XE8U80)

ALPHA (1) = -3.963 BETA (4) = 4.258

SECTION (1)LEFT WING TOP SURF DEPENDENT VARIABLE CP

2Y/BW	.2350	.2990	.3640	.4270	.5340	.6730	.7800	.8870	.9720	1.0000
X/CW										
.865		-.5418								
.879			-.2326							
.900		-.2865			-.0955			-.1026		
.905				-.1291						
.919			-.1456							
.950					-.0167	-.0264	-.0212			
.953				-.0516						
.955			-.0911							
.965		-.1541								

ALPHA (1) = -3.995 BETA (5) = 8.327 MACH = .59728 Q = 595.86 P = 2386.0 RN/L = 4.8298

SECTION (1)LEFT WING TOP SURF DEPENDENT VARIABLE CP

2Y/BW	.2350	.2990	.3640	.4270	.5340	.6730	.7800	.8870	.9720	1.0000
X/CW										
.000	-.1758	-.0266	.0086	.1114	.1349	-.0028	-.0923	-.0422	-.4430	
.010		-.0250	.0355		.3285	.3066	.2759	.2146		
.020		-.0252		.0000	.2752	.2446	.2232	.1772	-.2768	
.040			.0726	.1495						
.041	-.1222									
.050					.1061	.0782	.0550	.0234		
.069									-.2950	
.080					-.0351					
.081				.0697						
.086			.1335							
.094		-.0323								
.113	-.0644									
.150					-.1932	-.2326	-.2499	-.2675		
.157									-.2856	
.163			.0000							
.177				-.1188						
.229		.0589								
.246			-.0646							
.247	-.0054									
.250					-.3300	-.3729	-.4115	-.4395		
.274				-.2352						
.345									-.2255	
.362		.0224								
.390			-.2105							
.400					-.3298	-.3824		-.4080		
.402				-.2938						
.418										-.1559
.429	.0355									

AMES 11-073(OA148) -140A/B/C ORB LEFT WING TOP (XE8U80)

ALPHA (1) = -3.995 BETA (5) = 8.327

SECTION (1)LEFT WING TOP SURF DEPENDENT VARIABLE CP

2Y/BW	.2350	.2990	.3640	.4270	.5340	.6730	.7800	.8870	.9720	1.0000
X/CW										
.497		-.1858								
.503									-.2476	
.547	-.0975									
.550					-.3126	-.3478				
.565				-.2441						
.600								-.2988		
.633	-.2322									
.637			-.2081							
.650							-.3035			
.670									-.1955	
.700		-.1691				-.2684				
.723										-.3299
.725					-.3140					
.727	-.1836									
.750							-.4208	-.2372		
.760				-.3103						
.775					-.6116	-.4053				
.793	-.0547									
.798			-.2781							
.808				-.4508						
.834		-.2737								
.839			-.3977							
.850					-.1859	-.1483	-.1262			
.857				-.2222						
.862									-.0400	
.865		-.5376								
.879			-.2356							
.900		-.2987			-.1019			-.1035		
.905				-.1340						
.919			-.1485							
.950					-.0211	-.0233	-.0284			
.953				-.0524						
.955			-.0914							
.965		-.1566								

AMES 11-073(OA148) -140A/B/C ORB LEFT WING TOP (XEBU80)

ALPHA (2) = -.053 BETA (1) = -7.896 MACH = .59646 Q = 594.33 P = 2386.5 PN/L = 4.8222

SECTION (1)LEFT WING TOP SURF DEPENDENT VARIABLE CP

2Y/BW	.2350	.2990	.3640	.4270	.5340	.6730	.7800	.8870	.9720	1.0000
X/CW										
.000	-.0746	.0391	.0537	.2883	.4895	.4776	.4721	.5135	-.0866	
.010		.0648	.1282		.4290	.4637	.4042	.2157		
.020		.0490		.0000	.2982	.2746	.2189	.1260	-.1481	
.040			.1665	.1557						
.041	-.0104									
.050					.0020	-.0519	-.0931	-.1335		
.069									-.2748	
.080					-.2111					
.081				-.0234						
.086			.1936							
.094		.0148								
.113	-.0005									
.150					-.3858	-.4566	-.5325	-.4728		
.157									-.4279	
.163			.0000							
.177				-.2736						
.229		.0791								
.246			-.1548							
.247	.0281									
.250					-.4775	-.5656	-.6361	-.6908		
.274				-.3457						
.345									-.4602	
.362		-.0257								
.390			-.2849							
.400					-.3429	-.4372		-.5275		
.402				-.3013						
.418										-.0800
.429	.0382									
.497		-.2319								
.503									-.5161	
.547	-.1312									
.550					-.2394	-.3211				
.565				-.1462						
.600								-.3787		
.633	-.2608									
.637			-.0878							
.650							-.3050			
.670									-.4067	
.700		-.0505				-.2429				
.723										-.9071
.725					-.2224					
.727	-.0728									
.750							-.4285	-.3323		
.760				-.2262						
.775					-.4787	-.3391				

AMES 11-073(OA148) -140A/B/C ORB LEFT WING TOP (XEBU80)

ALPHA (2) = -.053 BETA (1) = -7.896

SECTION (1)LEFT WING TOP SURF DEPENDENT VARIABLE CP

2Y/BW	.2350	.2990	.3640	.4270	.5340	.6730	.7800	.8870	.9720	1.0000
X/CW										
.793	.0671									
.798			-.1926							
.808				-.3267						
.834		-.1850								
.839			-.3058							
.850					-.1146	-.0987	-.1013			
.857				-.1382						
.862									-.2534	
.865		-.4531								
.879			-.1611							
.900		-.2321			-.0459			-.0604		
.905				-.0659						
.919			-.1043							
.952					.0207	-.0046	.0244			
.953				-.0128						
.955			-.0596							
.965		-.1264								

ALPHA (2) = -.008 BETA (2) = -3.854 MACH = .59646 Q = 594.33 P = 2386.5 RN/L = 4.8222

SECTION (1)LEFT WING TOP SURF DEPENDENT VARIABLE CP

2Y/BW	.2350	.2990	.3640	.4270	.5340	.6730	.7800	.8870	.9720	1.0000
X/CW										
.000	-.1056	.0231	.0598	.2809	.4589	.4276	.4173	.4524	-.1081	
.010		.0254	.1000		.3512	.3786	.3141	.1300		
.020		.0071		.0000	.2231	.1944	.1431	.0615	-.2152	
.040			.1311	.0960						
.041	-.0657									
.050					-.0443	-.1100	-.1579	-.2019		
.069									-.3256	
.080					-.2446					
.081				-.0640						
.086			.1495							
.094		-.0271								
.113	-.0377									
.150					-.4046	-.4657	-.5520	-.5008		
.157									-.4377	
.163			.0000							
.177				-.2837						
.229		.0492								
.246			-.1774							
.247	-.0017									
.250					-.4863	-.5707	-.6460	-.5988		

DATE 11 FEB 76 TABULATED PRESSURE DATA - OA148 (AMES 11-073-1)

AMES 11-073(OA148) -140A/B/C ORB LEFT WING TOP (XEBUBO)

ALPHA (2) = -.008 BETA (2) = -3.854

SECTION (1)LEFT WING TOP SURF DEPENDENT VARIABLE CP

2Y/BW	.2350	.2990	.3640	.4270	.5340	.6730	.7800	.8870	.9720	1.0000
X/CW										
.274				-.3653					-.4452	
.345										
.362		-.0518								
.390			-.3048							
.400					-.3670	-.4546		-.5373		
.402				-.3306						-.1425
.418										
.429	.0164									
.497		-.2606							-.4905	
.503										
.547	-.1581									
.550					-.2745	-.3553				
.565				-.1903						
.600								-.3737		
.633	-.2422									
.637			-.1386							
.650							-.3206			
.670									-.3954	
.700		-.0999				-.2666				
.723										-1.0482
.725					-.2523					
.727	-.1215									
.750							-.4291	-.3308		
.760				-.2499						
.775					-.5148	-.3669				
.793	.0221									
.798			-.2164							
.808				-.3597						
.834		-.2078								
.839			-.3403							
.850					-.1397	-.1249	-.1202			
.857				-.1718						
.862									-.3046	
.865		-.4680								
.879			-.1941							
.900		-.2533			-.0665			-.0768		
.905				-.0959						
.919			-.1222							
.950					-.0020	-.0178	.0041			
.953				-.0303						
.955			-.0733							
.965		-.1525								

AMES 11-073(OA148) -140A/B/C ORB LEFT WING TOP (XEBUBD)

ALPHA (2) = .029 BETA (3) = .176 MACH = .59646 Q = 594.33 P = 2386.5 RN/L = 4.8222

SECTION (1)LEFT WING TOP SURF DEPENDENT VARIABLE CP

2Y/BW	.2350	.2950	.3640	.4270	.5340	.6730	.7800	.8870	.9720	1.0000
X/CW										
.000	-.1440	-.0038	.0451	.2710	.4253	.3516	.3609	.3795	-.1468	
.010		-.0248	.0697		.2718	.2975	.2279	.0683		
.020		-.0352		.0000	.1481	.1177	.0668	-.0122	-.2682	
.040			.0926	.0401						
.041	-.1113									
.050					-.0985	-.1448	-.2044	-.2441		
.069									-.3494	
.080					-.2611					
.081				-.1008						
.086			.1058							
.094		-.0548								
.113	-.0746									
.150					-.4122	-.4674	-.5298	-.4998		
.157									-.4345	
.163			.0000							
.177				-.2994						
.229		.0271								
.246			-.2006							
.247	-.0242									
.250					-.4943	-.5648	-.6373	-.6692		
.274				-.3755						
.345									-.4114	
.362		-.0720								
.390			-.3159							
.400					-.3853	-.4731		-.5295		
.402				-.3553						
.418										-.2079
.429	-.0080									
.497		-.2804								
.503									-.4463	
.547	-.1772									
.550					-.3052	-.3709				
.565				-.2286						
.600								-.3725		
.633	-.2682									
.637			-.1747							
.650							-.3233			
.670									-.3689	
.700		-.1388				-.2777				
.723										-1.1169
.725					-.2769					
.727	-.1526									
.750							-.4188	-.3135		
.760				-.2768						
.775					-.5328	-.3766				

AMES 11-073(OA148) -140A/B/C ORB LEFT WING TOP (XEBUBO)

ALPHA (2) = .029 BETA (3) = .176

SECTION (1)LEFT WING TOP SURF DEPENDENT VARIABLE CP

2Y/BW	.2350	.2990	.3640	.4270	.5340	.6730	.7800	.8870	.9720	1.0000
X/CW										
.793	-.0201									
.798			-.2457							
.808				-.3898						
.834		-.2375								
.839			-.3615							
.850					-.1555	-.1384	-.1336			
.857				-.1896						
.862									-.2491	
.865		-.4864								
.879			-.2031							
.900		-.2747			-.0842			-.0905		
.905				-.1114						
.919			-.1420							
.950					-.0130	-.0282	-.0259			
.953				-.0420						
.955			-.0943							
.965		-.1639								

ALPHA (2) = .052 BETA (4) = 4.239 MACH = .59646 Q = 594.33 P = 2386.5 PN/L = 4.8222

SECTION (1)LEFT WING TOP SURF DEPENDENT VARIABLE CP

2Y/BW	.2350	.2990	.3640	.4270	.5340	.6730	.7800	.8870	.9720	1.0000
X/CW										
.000	-.1701	-.0598	.0128	.2349	.3872	.3329	.3191	.3215	-.1786	
.010		-.0683	.0431		.1908	.2180	.1392	-.0373		
.020		-.0716		.0000	.0918	.0514	-.0088	-.1044	-.3278	
.040			.0665	.0032						
.041	-.1404									
.059					-.1232	-.1838	-.2473	-.3025		
.069									-.3897	
.080					-.2831					
.081				-.1135						
.096			.0813							
.094		-.0650								
.113	-.0882									
.150					-.4086	-.4738	-.5287	-.5183		
.157									-.4478	
.163			.0000							
.177				-.2917						
.229		.0166								
.245			-.2007							
.247	-.0369									
.250					-.4902	-.5690	-.6287	-.6662		

AMES 11-073(OA148) -140A/B/C ORB LEFT WING TOP (XE8080)

ALPHA (2) = .052 BETA (4) = 4.239

SECTION (1)LEFT WING TOP SURF DEPENDENT VARIABLE CP

2Y/CW	.2350	.2990	.3640	.4270	.5340	.6730	.7800	.8870	.9720	1.0000
X/CW										
.274				-.3716						
.345									-.3944	
.352		-.0730								
.390			-.3199							
.400					-.4062	-.4837		-.5220		
.402				-.3702						
.418										-.3038
.429	-.0141									
.497		-.2759								
.503									-.4173	
.547	-.1750									
.550					-.3330	-.3833				
.565				-.2568						
.600								-.3624		
.633	-.2830									
.637			-.2125							
.650							-.3296			
.670									-.3774	
.700		-.1737				-.2828				
.723										-1.2819
.725					-.2958					
.727	-.1805									
.750							-.3920	-.3063		
.760				-.2849						
.775					-.5530	-.3842				
.793	-.0551									
.798			-.2562							
.808				-.4000						
.834		-.2487								
.839			-.3683							
.850					-.1737	-.1464	-.1436			
.857				-.2028						
.862									-.2704	
.865		-.4943								
.879			-.2221							
.900		-.2869			-.0944			-.0898		
.905				-.1201						
.919			-.1438							
.950					-.0264	-.0350	-.0442			
.953				-.0584						
.955			-.0968							
.965		-.1563								

AMES 11-073(OA148) -140A/B/C ORB LEFT WING TOP (XEBUBC)

ALPHA (2) = .006 BETA (5) = 8.284 MACH = .59646 Q = 594.33 P = 2386.5 RN/L = 4.8222

SECTION (1)LEFT WING TOP SURF DEPENDENT VARIABLE CP

2Y/BW	.2350	.2990	.3640	.4270	.5340	.6730	.7800	.8870	.9720	1.0000
X/CW										
.002	-.2166	-.1389	-.0446	.1849	.3438	.2889	.2684	.2517	-.2264	
.010		-.1285	.0004		.1040	.1245	.0585	-.1045		
.020		-.1127		.0000	.0027	-.0199	-.0738	-.1682	-.3527	
.040			.0281	-.0585						
.041	-.1768									
.050					-.1905	-.2257	-.2826	-.3435		
.069									-.4099	
.080					-.3188					
.081				-.1536						
.085			.0439							
.094		-.0748								
.113	-.1058									
.150					-.4119	-.4764	-.5174	-.5239		
.157									-.4387	
.163			.0000							
.177				-.3031						
.229		.0028								
.246			-.2129							
.247	-.0443									
.250					-.4989	-.5624	-.6191	-.6413		
.274				-.3749						
.345									-.3575	
.362		-.0838								
.390			-.3277							
.400					-.4126	-.4835		-.5077		
.402				-.3855						
.418										-.4135
.429	-.0235									
.497		-.2874								
.503									-.3841	
.547	-.1918									
.550					-.3534	-.3948				
.565				-.2833						
.600								-.3546		
.633	-.3041									
.637			-.2519							
.650							-.3265			
.570									-.3770	
.700		-.2087				-.2950				
.723										-1.2861
.725					-.3095					
.727	-.2141									
.750							-.3760	-.2928		
.760				-.3014						
.775					-.5571	-.3917				

AMES 11-073(OA148) -140A/B/C ORB LEFT WING TOP (XEBUBO)

ALPHA (2) = .006 BETA (5) = 8.284

SECTION (1)LEFT WING TOP SURF DEPENDENT VARIABLE CP

2Y/BW	.2350	.2990	.3640	.4270	.5340	.6730	.7800	.8870	.9720	1.0000
X/CW										
.793	-.0888									
.798			-.2698							
.808				-.4090						
.834		-.2643								
.839			-.3751							
.850					-.1824	-.1517	-.1506			
.857				-.2089						
.862									-.2348	
.865		-.4935								
.879			-.2243							
.900		-.2943			-.1040			-.0928		
.905				-.1285						
.919			-.1440							
.950					-.0297	-.0401	-.0617			
.953				-.0705						
.955			-.0980							
.965		-.1535								

ALPHA (3) = 3.903 BETA (1) = -7.902 MACH = .59628 Q = 593.97 P = 2386.5 RN/L = 4.8207

SECTION (1)LEFT WING TOP SURF DEPENDENT VARIABLE CP

2Y/BW	.2350	.2990	.3640	.4270	.5340	.6730	.7800	.8870	.9720	1.0000
X/CW										
.000	-.0442	.0430	.0862	.3868	.5926	.5788	.5513	.4615	-.1396	
.010		-.0080	.0828		.0441	.0549	-.0939	-.4362		
.020		-.0330		.0000	-.1187	-.2028	-.3217	-.5199	-.6168	
.040			.0828	-.1444						
.041	-.0518									
.050					-.4100	-.5408	-.6384	-.7146		
.069									-.7373	
.080					-.6207					
.081				-.3324						
.086			.0471							
.094		-.0543								
.113	-.0353									
.150					-.6929	-.8148	-.9201	-.8403		
.157									-.8857	
.163			.0000							
.177				-.5192						
.229		.0014								
.245			-.3532							
.247	-.0172									
.250					-.6764	-.8150	-.9115	-.9801		

DATE 11 FEB 75 TABULATED PRESSURE DATA - OA148 (AMES 11-073-1)

AMES 11-073(OA148) -140A/B/C ORB LEFT WING TOP (XEBU80)

ALPHA (3) = 3.903 BETA (1) = -7.902

SECTION (1)LEFT WING TOP SURF DEPENDENT VARIABLE CP

2Y/BW	.2350	.2990	.3640	.4270	.5340	.6730	.7800	.8370	.9720	1.0000
X/CW										
.274				-.5187						
.345									-.8565	
.362		-.1582								
.380			-.4152							
.400					-.4260	-.5389		-.6680		
.402				-.3907						-.7141
.418										
.429	-.0341									
.457		-.3525							-.8598	
.503										
.507	-.2694									
.580					-.2684	-.3662				
.580				-.1733						
.600								-.4674		
.633	-.2944									
.637			-.1152							
.650							-.3388			
.670									-.7661	
.700		-.0951				-.2456				
.723										-2.3734
.725					-.2121					
.727	-.1178									
.750							-.4161	-.4085		
.760				-.2086						
.775					-.4306	-.3362				
.792	.0755									
.798			-.1810							
.809				-.2904						
.834		-.1722								
.839			-.2862							
.850					-.0988	-.0956	-.1220			
.857				-.1257						
.862									-.6616	
.865		-.4302								
.879			-.1542							
.910		-.2147			-.0341			-.0939		
.905				-.0606						
.910			-.0862							
.950					.0190	.0000	.0021			
.903				-.0053						
.925			-.0424							
.965		-.1103								

DATE 11 FEB 76 TABULATED PRESSURE DATA - OA -073-1) PAGE 5321

AMES 11-073(OA148 ORB LEFT WING TOP (XEBUBO)

ALPHA (3) = 3.907 BETA (2) = -3.866 MACH Q = 593.97 P = 2386.5 RN/L = 4.8207

SECTION (1)LEFT WING TOP SURF DEPENDENT VAR: CP

2Y/BW	.2350	.2990	.3640	.4270	.5340	.6730	.7600	.8870	.9720	1.0000
X/CW										
.000	-.1104	-.0455	-.0016	.2993	.5120	.4862	.4491	.3422	-.2949	
.010		-.0961	.0017		-.0839	-.0501	-.2105	-.5482		
.020		-.1022		.0000	-.1975	-.2960	-.4270	-.6084	-.7029	
.040			.0185	-.2208						
.041	-.1095									
.050					-.4608	-.5878	-.6904	-.7896		
.069									-.7692	
.080					-.6437					
.081				-.3776						
.086			-.0014							
.094		-.0956								
.113	-.0829									
.150					-.6967	-.8312	-.9256	-.8535		
.157									-.8755	
.163			.0000							
.177				-.5261						
.229		-.0259								
.246			-.3720							
.247	-.0482									
.250					-.6827	-.8219	-.9106	-.9727		
.274				-.5390						
.345									-.6163	
.362		-.1823								
.390			-.4354							
.400					-.4563	-.5658		-.6539		
.402				-.4308						
.418										-.9272
.429	-.0612									
.497		-.3921								
.503									-.8324	
.547	-.3093									
.550					-.3105	-.3953				
.565				-.2217						
.600								-.4646		
.633	-.3338									
.637			-.1650							
.650							-.3519			
.670									-.8798	
.700		-.1452				-.2680				
.723										-2.2648
.725					-.2484					
.727	-.1636									
.750							-.4202	-.4148		
.760				-.2375						
.775					-.4590	-.3559				

AMES 11-073(OA148) -.40A/B/C ORB LEFT WING TOP (XEBU80)

ALPHA (3) = 3.907 BETA (2) = -3.866

SECTION (1)LEFT WING TOP SURF DEPENDENT VARIABLE C.

2Y/BW	.2350	.2990	.3640	.4270	.5340	.6730	.7800	.8870	.9720	1.0000
X/CW										
.793	.026.									
.798			-.2118							
.808				-.3268						
.934		-.2095								
.839			-.3143							
.850					-.1307	-.1177	-.1354			
.857				-.1527						
.862									-.7621	
.865		-.4748								
.879			-.1770							
.900		-.2409			-.0639			-.1069		
.905				-.0818						
.919			-.1089							
.950					-.0030	-.0119	-.0143			
.953				-.0257						
.955			-.0660							
.965		-.1422								

ALPHA (3) = 3.984 BETA (3) = .180 MACH = .59628 Q = 593.97 P = 2386.5 RN/L = 4.8207

SECTION (1)LEFT WING TOP SURF DEPENDENT VARIABLE CP

2Y/BW	.2350	.2990	.3640	.4270	.5340	.6730	.7800	.8870	.9720	1.0000
X/CW										
.000	-.1715	-.1568	-.1166	.2051	.4150	.3920	.3473	.2350	-.4523	
.010		-.1860	-.0847		-.1751	-.1550	-.3074	-.6120		
.020		-.1733		.0000	-.2863	-.3709	-.4918	-.6767	-.7529	
.040			-.0481	-.2737						
.041	-.1591									
.050					-.5028	-.6295	-.7349	-.8143		
.060									-.7941	
.080					-.6593					
.081				-.4056						
.086			-.0497							
.094		-.1235								
.113	-.1132									
.150					-.6952	-.8147	-.9103	-.8385		
157									-.8424	
.163			.0000							
.177				-.5322						
.229		-.0454								
.246			-.3820							
.247	-.0725									
.250					-.6887	-.8033	-.8913	-.9454		

AMES 11-073(OA148) -140A/B/C ORB LEFT WING TOP (XEBU80)

ALPHA (3) = 3.984 BETA (3) = .180

SECTION (1)LEFT WING TOP SURF DEPENDENT VARIABLE CP

2Y/BW	.2350	.2990	.3640	.4270	.5340	.6730	.7800	.8870	.9720	1.0000
X/CW										
.274				-.5358						
.345									-.7635	
.362		-.1966								
.390			-.4424							
.400					-.4721	-.5702		-.6400		
.402				-.4403						
.418										-1.1384
.429	-.0810									
.497		-.3972								
.503									-.7593	
.547	-.3218									
.550					-.3383	-.4071				
.565				-.2598						
.600								-.4600		
.633	-.3623									
.637			-.2096							
.650							-.3607			
.670									-.9990	
.700		-.1860				-.2802				
.723										-2.1991
.725					-.2684					
.727	-.1862									
.750							-.4322	-.4049		
.760				-.2589						
.775					-.4694	-.3713				
.793	-.0098									
.798			-.2369							
.808				-.3388						
.834		-.2318								
.839			-.3330							
.850					-.1464	-.1202	-.1414			
.857				-.1778						
.862									-.8478	
.865		-.5116								
.879			-.1887							
.900		-.2653			-.0788			-.1088		
.905				-.1015						
.919			-.1226							
.950					-.0202	-.0329	-.0305			
.953				-.0492						
.955			-.0768							
.965		-.1483								

AMES 11-073(OA148) -140A/B/C ORB LEFT WING TOP (XEBUBO)

ALPHA (3) = 3.988 BETA (4) = 4.226 MACH = .59628 Q = 593.97 P = 2388.5 RN/L = 4.8207

SECTION (1)LEFT WING TOP SURF DEPENDENT VARIABLE CP

2Y/BW	.2350	.2990	.3640	.4270	.5340	.6730	.7800	.8870	.9720	1.0000
X/CW										
.000	-.2347	-.2714	-.2410	.0838	.3185	.2877	.2234	.0784	-.6863	
.010		-.2659	-.1574		-.2591	-.2680	-.4406	-.7510		
.020		-.2296		.0000	-.3575	-.4580	-.5883	-.8034	-.8738	
.040			-.0889	-.3145						
.041	-.1990									
.050					-.5398	-.6724	-.7829	-.3820		
.069									-.8412	
.080					-.6710					
.081				-.4087						
.085			-.0827							
.094		-.1426								
.113	-.1421									
.150					-.6798	-.8099	-.9029	-.8513		
.157									-.8179	
.163			.0000							
.177				-.5209						
.229		-.0553								
.246			-.3745							
.247	-.0835									
.250					-.6859	-.7978	-.8837	-.9252		
.274				-.5260						
.345									-.7243	
.362		-.1971								
.390			-.4335							
.400					-.4901	-.5780		-.6383		
.402				-.4503						
.418										-1.4622
.479	-.0861									
.497		-.4042								
.503									-.7418	
.547	-.3215									
.550					-.3648	-.4262				
.565				-.2895						
.600								-.4448		
.633	-.3817									
.637			-.2632							
.650							-.3636			
.670									-.9620	
.700		-.2159				-.2946				
.723										-2.1809
.725					-.2863					
.727	-.2158									
.750							-.4181	-.4114		
.760				-.2858						
.775					-.4675	-.3676				

AMES 11-073(OA148) -140A/B/C ORB LEFT WING TOP (XEBU80)

ALPHA (3) = 3.988 BETA (4) = 4.226

SECTION (1)LEFT WING TOP SURF DEPENDENT VARIABLE CP

2Y/BW	.2350	.2990	.3640	.4270	.5340	.6730	.7800	.8870	.9720	1.0000
X/CW										
.793	-.0480									
.798			-.2545							
.808				-.3579						
.934		-.2501								
.839			-.3711							
.850					-.1594	-.1385	-.1687			
.857				-.1958						
.862									-.9314	
.865		-.5327								
.879			-.2215							
.9[illegible]		-.2839			-.1001			-.1212		
.9[illegible]5				-.1231						
.919			-.1470							
.950					-.0531	-.0463	-.0541			
[illegible]				-.0631						
.955			-.0985							
.965		-.1532								

ALPHA (3) = 4.029 BETA (5) = 8.276 MACH = .59628 Q = 593.97 P = 2386.5 RN/L = 4.8207

SECTION (1)LEFT WING TOP SURF DEPENDENT VARIABLE CP

2Y/BW	.2350	.2990	.3640	.4270	.5340	.6730	.7800	.8870	.9720	1.0000
X/CW										
.000	-.3144	-.4190	-.2571	-.0708	.1916	.1588	.1012	-.0503	-.8888	
.010		-.3353	-.1444		-.3981	-.3944	-.5553	-.8489		
.020		-.2523		.0000	-.4607	-.5425	-.6800	-.8870	-.9149	
.040			-.1236	-.3518						
.041	-.2358									
.050					-.5928	-.6930	-.8156	-.9246		
.069									-.8509	
.080					-.6890					
.081				-.4134						
.086			-.1340							
.094		-.2289								
.113	-.1756									
.150					-.6752	-.7690	-.8815	-.8297		
.157									-.7695	
.163			.0000							
.177				-.4905						
.229		-.0439								
.245			-.4427							
.247	-.0916									
.250					-.6721	-.7740	-.8370	-.8894		

DATE 11 FEB 76 TABULATED PRESSURE DATA - OA148 (AMES 11-073-1)

AMES 11-073(OA148) -140A/B/C ORB LEFT WING TOP (XEBUBD)

ALPHA (3) = 4.029 BETA (5) = 8.276

SECTION (1)LEFT WING TOP SURF DEPENDENT VARIABLE CP

2Y/BW	.2350	.2990	.3640	.4270	.5340	.6730	.7800	.8870	.9720	1.0000
X/CW										
.274				-.5071						
.345									-.6756	
.362		-.1827								
.390			-.4382							
.400					-.4994	-.5803		-.6129		
.402				-.4651						
.418										-1.7030
.429	-.0841									
.497		-.4054								
.503									-.6855	
.547	-.3124									
.550					-.3802	-.4288				
.565				-.3462						
.600								-.4332		
.633	-.3864									
.637			-.2651							
.650							-.3477			
.670									-1.0381	
.700		-.2379				-.2961				
.723										-2.0814
.725					-.3003					
.727	-.2394									
.750							-.3571	-.3927		
.760				-.3173						
.775					-.4065	-.3248				
.793	-.0940									
.798			-.2781							
.808				-.4263						
.834		-.2744								
.839			-.3813							
.850					-.1872	-.1475	-.1733			
.857				-.2257						
.862									-.7771	
.865		-.5383								
.879			-.2319							
.900		-.2952			-.1383			-.1358		
.905				-.1443						
.919			-.1559							
.950					-.0891	-.0812	-.0978			
.953				-.0743						
.955			-.0997							
.965		-.1639								

AMES 11-073(OA148) -140A/B/C ORB LEFT WING TOP (XEBUBO)

ALPHA (4) = 7.903 BETA (1) = -7.896 MACH = .59626 Q = 593.85 P = 2386.1 RN/L = 4.8197

SECTION (1)LEFT WING TOP SURF DEPENDENT VARIABLE CP

2Y/BW	.2350	.2990	.3640	.4270	.5340	.6730	.780	.8870	.9720	1.0000
X/CW										
.000	-.0710	-.1425	-.1897	.1521	.3663	.2973	.1895	-.0653	-.9426	
.010		-.2401	-.1970		-.6105	-.6648	-.9699	-1.5002		
.020		-.2157		.0000	-.7293	-.9170	-1.1455	-1.5835	-1.6214	
.040			-.1587	-.5615						
.041	-.0996									
.050					-.9684	-1.1925	-1.3919	-1.5702		
.069									-1.4806	
.080					-1.1308					
.081				-.7168						
.086			-.1859							
.094		-.1562								
.113	-.0772									
.150					-1.0528	-1.2340	-1.3731	-1.2757		
.157									-1.6236	
.163			.0000							
.177				-.7833						
.229		-.0775								
.246			-.5672							
.247	-.0578									
.250					-.8788	-1.0342	-1.1684	-1.3252		
.274				-.6737						
.345									-1.3690	
.362		-.2833								
.390			-.5268							
.400					-.4994	-.6370		-.8524		
.402				-.4545						
.418										-2.0876
.429	-.1206									
.497		-.4844								
.503									-1.3502	
.547	-.3980									
.550					-.2725	-.4031				
.565				-.2128						
.600								-.5801		
.633	-.3987									
.637			-.1819							
.650							-.3688			
.670									-1.8455	
.700		-.1364				-.2501				
.723										-1.8670
.725					-.1953					
.727	-.1365									
.750							-.4112	-.5379		
.760				-.2217						
.775					-.3284	-.3005				

ORIGINAL PAGE IS
OF POOR QUALITY

AMES 11-073(OA148) -140A/B/C ORB LEFT WING TOP (XE8UB0)

ALPHA (4) = 7.903 BETA (1) = -7.696

SECTION (1)LEFT WING TOP SURF DEPENDENT VARIABLE CP

2Y/BW	.2350	.2990	.3540	.4270	.5340	.6730	.7800	.8870	.9720	1.0000
X/CW										
.793	.1044									
.798			-.1777							
.808				-.3010						
.83[illegible]		-.1770								
.839			-.2985							
.850					-.0962	-.0867	-.1642			
.857				-.1490						
.862									-1.4060	
.865		-.4959								
.879			-.1489							
.900		-.1829			-.0445			-.2210		
.905				-.0928						
.919			-.0945							
.950					-.0068	-.0160	-.0503			
.953				-.0354						
.955			-.0462							
.965		-.1005								

ALPHA (4) = 7.912 BETA (2) = -3.851 MACH = .59626 Q = 593.85 P = 2386.1 RN/L = 4.8197

SECTION (1)LEFT WING TOP SURF DEPENDENT VARIABLE CP

2Y/BW	.2350	.2990	.3640	.4270	.5340	.6730	.7800	.8870	.9720	1.0000
X/CW										
.000	-.1646	-.3049	-.3971	-.0101	.2167	.1482	.0297	-.2579	-1.2651	
.010		-.3703	-.3212		-.7551	-.7991	-1.1391	-1.6433		
.020		-.3155		.0000	-.8449	-1.0356	-1.2828	-1.7503	-1.8484	
.040			-.2391	-.6378						
.041	-.1583									
.050					-1.0115	-1.2525	-1.4532	-1.6452		
.069									-1.5236	
.080					-1.1544					
.081				-.7488						
.086			-.2450							
.094		-.1873								
.113	-.1336									
.150					-1.0330	-1.2261	-1.3535	-1.2279		
.157									-1.5343	
.163			.0000							
.177				-.7816						
.229		-.1082								
.245			-.5753							
.247	-.0973									
.250					-.8779	-1.0292	-1.1460	-1.3152		

AMES 11-073(OA148) -140A/B/C ORB LEFT WING TOP (XEBU80)

ALPHA (41) = 7.912 BETA (2) = -3.851

SECTION (1) LEFT WING TOP SURF DEPENDENT VARIABLE CP

2Y/BW	.2350	.2990	.3640	.4270	.5340	.6730	.7800	.8870	.9720	1.0000
X/CW										
.274				-.6832						
.345									-1.3090	
.362		-.3162								
.390			-.5399							
.400					-.5144	-.6540		-.8314		
.402				-.4773						
.418										-2.3807
.429	-.1413									
.497		-.5281								
.503									-1.2794	
.547	-.4216									
.550					-.3096	-.4238				
.565				-.2715						
.600								-.5665		
.633	-.4268									
.637			-.2275							
.650							-.3777			
.670									-1.7322	
.700		-.2109				-.2637				
.723										-1.9132
.725					-.2263					
.727	-.1827									
.750							-.4082	-.5104		
.760				-.2531						
.775					-.2946	-.3106				
.793	.0371									
.798			-.2232							
.808				-.3395						
.834		-.1892								
.839			-.3657							
.850					-.1317	-.0999	-.1874			
.857				-.1781						
.862									-1.5150	
.865		-.5123								
.879			-.1971							
.900		-.2064			-.0939			-.2452		
.905				-.1172						
.919			-.1432							
.950					-.0526	-.0463	-.0881			
.953				-.0596						
.955			-.0824							
.965		-.1367								

AMES 11-073(OA148) -140A/B/C CRB LEFT WING TOP (XEBUBO)

ALPHA (4) = 8.059 BETA (3) = .184 MACH = .59626 Q = 593.85 P = 2386.1 RN/L = 4.8197

SECTION (1)LEFT WING TOP SURF DEPENDENT VARIABLE CP

2Y/BW	.2350	.2990	.3640	.4270	.5340	.6730	.7800	.8870	.9720	1.0000
X/CW										
.000	-.2704	-.4985	-.5748	-.2123	.2623	-.0185	-.1562	-.4417	-1.6063	
.015		-.5092	-.4070		-.8890	-.9403	-1.3112	-1.7708		
.020		-.4057		.0000	-.9336	-1.1326	-1.4009	-1.9102	-1.9601	
.040			-.2532	-.6928						
.041	-.2281									
.050					-1.0658	-1.2948	-1.4948	-1.6812		
.069									-1.5201	
.080					-1.1541					
.081				-.7588						
.086			-.2326							
.094		-.2210								
.113	-.1995									
.150					-1.0071	-1.2153	-1.3438	-1.2143		
.157									-1.3948	
.163			.0000							
.177				-.7691						
.229		-.1912								
.246			-.5659							
.247	-.1146									
.250					-.8640	-1.0240	-1.1363	-1.2733		
.274				-.6754						
.345									-1.2324	
.362		-.3607								
.390			-.5682							
.400					-.5310	-.6570		-.8102		
.402				-.5201						
.419										-2.7069
.429	-.1547									
.497		-.5523								
.503									-1.2019	
.547	-.4479									
.550					-.3577	-.4348				
.565				-.3348						
.600								-.5547		
.633	-.4571									
.637			-.3174							
.650							-.3840			
.670									-1.5553	
.700		-.1879				-.2784				
.723										-1.9480
.725					-.2715					
.727	-.2184									
.750							-.4016	-.5044		
.760				-.2799						
.775					-.3522	-.2616				

AMES 11-073(OA148) -140A/B/C ORB LEFT WING TOP (XEBUBO)

ALPHA (4) = 8.059 BETA (3) = .184

SECTION (1)LEFT WING TOP SURF DEPENDENT VARIABLE CP

2Y/BW	.2350	.2990	.3640	.4270	.5340	.6730	.7800	.8870	.9720	1.0000
X/CW										
.793	-.0262									
.798			-.2481							
.808				-.4181						
.834		-.2267								
.839			-.4118							
.850					-.1873	-.1638	-.2036			
.857				-.2452						
.862									-1.4963	
.865		-.5156								
.879			-.2115							
.900		-.2705			-.1410			-.2672		
.905				-.1565						
.919			-.1417							
.950					-.0891	-.0850	-.1149			
.953				-.0849						
.955			-.0877							
.965		-.1418								

ALPHA (4) = 8.016 BETA (4) = 4.233 MACH = .59626 Q = 593.85 P = 2386.1 RN/L = 4.8197

SECTION (1)LEFT WING TOP SURF DEPENDENT VARIABLE CP

2Y/BW	.2350	.2990	.3640	.4270	.5340	.6730	.7800	.8870	.9720	1.0000
X/CW										
.000	-.3558	-.6485	-.5344	-.3813	-.1037	-.1955	-.3558	-.6953	-2.1249	
.010		-.4964	-.2853		-.9348	-1.0849	-1.4746	-1.9671		
.020		-.3017		.0000	-.9873	-1.2219	-1.4871	-2.0830	-2.1363	
.040			-.2536	-.6422						
.041	-.2808									
.050					-1.0415	-1.3043	-1.5332	-1.8050		
.069									-1.4845	
.080					-.1199					
.081				-.6669						
.086			-.2771							
.094		-.3965								
.113	-.2318									
.150					-.9590	-1.1520	-1.3026	-1.2154		
.157									-1.3683	
.153			.0000							
.177				-.6869						
.229		-.2483								
.245			-.5652							
.247	-.1196									
.250					-.8269	-1.0102	-1.1145	-1.2106		

AMES 11-073(OA148) -140A/B/C ORB LEFT WING TOP (XDSUBD)

ALPHA (4) = 8.016 BETA (4) = 4.233

SECTION (1)LEFT WING TOP SURF DEPENDENT VARIABLE CP

2Y/BW	.2350	.2990	.3640	.4270	.5340	.6730	.7800	.8870	.9720	1.0000
X/CW										
.274				-.6698						
.345									-1.1149	
.362		-.2722								
.390			-.7009							
.400					-.5379	-.6633		-.7896		
.402				-.5239						
.418										-2.5102
.429	-.1545									
.497		-.5200								
.503									-1.0320	
.547	-.4506									
.550					-.4186	-.4489				
.585				-.3623						
.600								-.5304		
.633	-.4699									
.637			-.2882							
.650							-.3835			
.670									-1.3711	
.700		-.2330				-.3101				
.723										-1.8586
.725					-.3584					
.727	-.2467									
.750							-.3896	-.4745		
.760				-.3623						
.775					-.5563	-.3184				
.793	-.0780									
.798			-.2632							
.808				-.4846						
.834		-.2649								
.839			-.4189							
.850					-.1819	-.2000	-.2152			
.857				-.2686						
.862									-1.4170	
.865		-.5356								
.879			-.2432							
.900		-.2996			-.1197			-.2898		
.905				-.1662						
.919			-.1628							
.930					-.0237	-.0604	-.1481			
.943				-.0795						
.955			-.1028							
.965		-.1643								

DATE 11 FEB 76 TABULATED PRESSURE DATA - OA148 (AMES 11-073-1)

AMES 11-073(OA148) -140A/B/C ORB LEFT WING TOP

(XE8U80)

ALPHA (4) = 8.043 BETA (5) = 8.283 MACH = .59625 Q = 593.85 P = 2386.1 RN/L = 4.8'9

SECTION (1)LEFT WING TOP SURF DEPENDENT VARIABLE CP

X/CW \ 2Y/BW	.2350	.2990	.3640	.4270	.5340	.6730	.7800	.8870	.9720	1.0000
.000	-.4728	-.7283	-.3898	-.5287	-.2764	-.3858	-.5502	-.8862	-2.3816	
.010		-.4274	-.3391		-1.0980	-1.2341	-1.6271	-2.1059		
.020		-.4194		.0000	-1.0533	-1.3090	-1.5901	-2.1554	-1.7580	
.040			-.3327	-.5299						
.041	-.3889									
.050					-1.0580	-1.3109	-1.5190	-1.8205		
.059									-1.4620	
.080					-1.0717					
.081				-.5961						
.086			-.3667							
.094		-.4204								
.113	-.2274									
.150					-.8902	-1.1025	-1.2537	-1.1650		
.157									-1.3220	
.163			.0000							
.177				-.6501						
.229		-.3294								
.246			-.7978							
.247	-.1553									
.250					-.7464	-.9661	-1.0561	-1.1515		
.274				-.6677						
.345									-.9575	
.362		-.2440								
.370			-.5929							
.400					-.5723	-.6327		-.7503		
.402				-.6644						
.418										-2.193
.420	-.1598									
.497		-.5215								
.503									-.9010	
.547	-.4408									
.550					-.4313	-.4442				
.565				-.4862						
.600								-.5039		
.633	-.4765									
.637			-.3011							
.650							-.3689			
.670									-1.2893	
.700		-.2647				-.3421				
.723										-1.5437
.725					-.3724					
.727	-.2663									
.750							-.3411	-.4454		
.760				-.3379						
.775					-.5732	-.4180				

AMES 11-073(OA148) -140A/B/C ORB LEFT WING TOP (XEBUBO)

ALPHA (4) = 8.043 BETA (5) = 8.283

SECTION (1)LEFT WING TOP SURF DEPENDENT VARIABLE CP

2Y/BW	.2350	.2990	.3640	.4270	.5340	.6730	.7800	.8870	.9720	1.0000
X/CW										
.793	-.1285									
.799			-.2879							
.808				-.5071						
.834		-.2855								
.839			-.4301							
.850					-.2800	-.1875	-.2184			
.857				-.2650						
.862									-1.1233	
.865		-.5222								
.879			-.2550							
.900		-.3086			-.1836			-.3112		
.905				-.1625						
.919			-.1683							
.950					-.0765	-.0778	-.1790			
.953				-.0814						
.955			-.1140							
.965		-.1802								

ALPHA (5) = 11.974 BETA (1) = -7.860 MACH = .59650 Q = 594.19 P = 2385.7 RN/L = 4.8199

SECTION (1)LEFT WING TOP SURF DEPENDENT VARIABLE CP

2Y/BW	.2350	.2990	.3640	.4270	.5340	.6730	.7800	.8870	.9720	1.0000
X/CW										
.000	-.1583	-.5359	-.8034	-.4134	-.1518	-.2981	-.4676	-.7999	-2.2290	
.010		-.6236	-.6684		-1.5905	-1.6864	-2.1110	-2.5966		
.020		-.4984		.0000	-1.5949	-1.8773	-2.2658	-2.7143	-3.0021	
.040			-.5102	-1.1038						
.041	-.1560									
.050					-1.6777	-2.0385	-2.4241	-2.6829		
.069									-2.9542	
.080					-1.7878					
.081				-1.1509						
.086			-.4498							
.094		-.2318								
.113	-.1753									
.150					-1.3405	-1.7601	-2.2278	-1.8816		
.157									-2.7881	
.163			.0000							
.177				-1.0123						
.194		-.2143								
.245			-.7304							
.247	-.0969									
.250					-1.0203	-1.2326	-1.3165	-1.5013		

AMES 11-073(OA148) -140A/B/C ORB LEFT WING TOP (XEBUBO)

ALPHA (5) = 11.974 BETA (1) = -7.860

SECTION (1)LEFT WING TOP SURF DEPENDENT VARIABLE CP

2Y/BW	.2350	.2990	.3640	.4270	.5340	.6730	.7800	.8870	.9720	1.0000
X/CW										
.274				-.7666						
.345									-2.3339	
.362		-.5052								
.390			-.6926							
.400					-.4888	-.6824		-.9906		
.402				-.5532						
.418										-2.3155
.429	-.2017									
.497		-.7816								
.503									-2.2161	
.547	-.5362									
.550					-.3137	-.4056				
.565				-.3423						
.600								-.7199		
.633	-.4851									
.637			-.2231							
.650							-.4188			
.670									-1.7012	
.700		-.2025				-.2559				
.723										-1.6658
.725					-.2577					
.727	-.1566									
.750							-.4308	-.7809		
.760				-.2442						
.775					-.4491	-.2441				
.793	.0899									
.798			-.2712							
.808				-.3691						
.834		-.1536								
.839			-.4589							
.850					-.1988	-.1177	-.2187			
.857				-.2221						
.862									-1.3538	
.865		-.4743								
.879			-.2130							
.900		-.1689			-.1331			-.4755		
.905				-.1425						
.919			-.1289							
.950					-.0627	-.0176	-.1201			
.953				-.0724						
.955			-.0502							
.965		-.0957								

AMES 11-073(OA148) -140A/B/C ORB LEFT WING TOP (XEBUBO)

ALPHA (5) = 11.993 BETA (2) = -3.842 MACH = .59650 Q = 594.19 P = 2385.7 RN/L = 4.8199

SECTION (1)LEFT WING TOP SURF DEPENDENT VARIABLE CP

2Y/BW	.2350	.2990	.3640	.4270	.5340	.6730	.7800	.8870	.9720	1.0000
X/CW										
.000	-.2791	-.7471	-.9031	-.6206	-.3467	-.4995	-.6877	-1.0081	-2.5130	
.010		-.7326	-.5719		-1.7577	-1.8815	-2.2704	-2.7621		
.020		-.5296		.0000	-1.6869	-2.0419	-2.5016	-2.8724	-2.7189	
.040			-.3495	-1.0790						
.041	-.2508									
.050					-1.6840	-2.1275	-2.5827	-2.8136		
.069									-3.0154	
.080					-1.7627					
.081				-1.0775						
.086			-.3879							
.094		-.3993								
.113	-.2468									
.150					-1.3175	-1.52.	-1.6244	-1.8652		
.157									-2.6578	
.163			.0000							
.177				-.9346						
.229		-.4856								
.246			-.7724							
.247	-.1253									
.250					-.9854	-1.2278	-1.3281	-1.4101		
.274				-.8514						
.345									-2.4474	
.362		-.6355								
.390			-.6749							
.400					-.5575	-.7006		-1.0195		
.402				-.6413						
.418										-2.2552
.429	-.2142									
.497		-.7397								
.503									-2.3049	
.547	-.5799									
.550					-.4178	-.4339				
.565				-.2639						
.600								-.7259		
.633	-.5352									
.637			-.3753							
.650							-.4251			
.670									-1.6940	
.700		-.2048				-.3072				
.723										-1.6851
.725					-.3912					
.727	-.2255									
.750							-.4138	-.7488		
.760				-.2782						
.775					-.3839	-.3381				

AMES 11-073(OA148) -140A/B/C ORB LEFT WING TOP (XEBUBO)

ALPHA (5) = 11.993 BETA (2) = -3.842

SECTION (1)LEFT WING TOP SURF DEPENDENT VARIABLE CP

2Y/BW	.2350	.2990	.3640	.4270	.5340	.6730	.7800	.8870	.9720	1.0000
X/CW										
.793	-.0009									
.798			-.2646							
.808				-.4122						
.834		-.2073								
.839			-.4454							
.850					-.2204	-.1540	-.2347			
.857				-.2390						
.862									-1.3192	
.865		-.5059								
.870			-.2301							
.900		-.2380			-.1459			-.4536		
.905				-.1427						
.919			-.1655							
.950					-.0273	-.0374	-.1642			
.953				-.0518						
.955			-.1029							
.965		-.1339								

ALPHA (5) = 12.035 BETA (3) = .179 MACH = .59650 Q = 594.19 P = 2385.7 RN/L = 4.8199

SECTION (1)LEFT WING TOP SURF DEPENDENT VARIABLE CP

2Y/BW	.2350	.2990	.3640	.4270	.5340	.6730	.7800	.8870	.9720	1.0000
X/CW										
.000	-.4123	-.9114	-.8918	-.8314	-.5425	-.6955	-.8976	-1.2302	-2.6348	
.010		-.6155	-.4506		-1.8472	-2.0151	-2.4295	-2.8983		
.020		-.4871		.0000	-1.7375	-2.1887	-2.6149	-2.9644	-2.1429	
.040			-.4129	-.9415						
.041	-.3682									
.050					-1.6722	-2.1592	-2.6950	-2.8163		
.069									-2.1750	
.080					-1.6720					
.081				-.8962						
.086			-.4721							
.094		-.5351								
.113	-.2367									
.150					-1.2274	-1.5243	-1.4827	-2.0086		
.157									-2.2371	
.163			.0000							
.177				-.9248						
.229		-.6952								
.246			-.8472							
.247	-.1690									
.250					-.8947	-1.1687	-1.3082	-1.3886		

DATE 11 FEB 76 TABULATED PRESSURE DATA - OA148 (AMES 11-073-1) (XEBUBO)

AMES 11-073(OA148) -140A/B/C ORB LEFT WING TOP

ALPHA (5) = 12.035 BETA (3) = .179

SECTION (1)LEFT WING TOP SURF DEPENDENT VARIABLE CP

2Y/BW	.2350	.2990	.3640	.4270	.5340	.6730	.7800	.8870	.9720	1.0000
X/CW										
.274				-.8559					-2.3049	
.345										
.362		-.5966								
.390			-.7813							
.400					-.6274	-.6600		-.9673		
.402				-.5905						-2.0424
.418										
.429	-.2555									
.497		-.7368							-2.0803	
.503										
.517	-.5802									
.550					-.5188	-.4479				
.565				-.3861				-.6894		
.600										
.633	-.3575									
.637			-.4305							
.650							-.4075			
.670									-1.5241	
.700		-.2275				-.3591				
.723										-1.5055
.725					-.3367					
.727	-.2527									
.750							-.3930	-.6137		
.760				-.4169						
.775					-.5697	-.4189				
.793	-.0505									
.798			-.2701							
.808				-.5588						
.834		-.2359								
.839			-.4751							
.850					-.1971	-.1937	-.2584			
.857				-.3422						
.862									-1.1850	
.865		-.5297								
.879			-.2560							
.900		-.2759			-.1185			-.3703		
.905				-.2385						
.919			-.1745							
.950					-.0448	-.0750	-.1782			
.953				-.1378						
.955			-.1034							
.965		-.1368								

AMES 11-073(OA148) -140A/B/C ORB LEFT WING TOP (XEBU80)

ALPHA (5) = 12.027 BETA (4) = 4.242 MACH = .59650 Q = 594.19 P = 2385.7 RN/L = 4.8199

SECTION (1)LEFT WING TOP SURF DEPENDENT VARIABLE CP

2Y/BW	.2350	.2990	.3640	.4270	.5340	.6730	.7800	.8870	.9720	1.0000
X/CW										
.000	-.5353	-.9972	-.6197	-.9391	-.7538	-.9303	-1.1341	-1.4577	-2.5186	
.010		-.5512	-.4856		-1.9204	-2.1983	-2.6389	-2.7339		
.020		-.5398		.0000	-1.7158	-2.3098	-2.7790	-2.7128	-1.9004	
.040			-.4879	-.7693						
.041	-.5126									
.050					-1.5836	-2.1185	-2.7558	-2.5134		
.069									-1.8429	
.080					-1.4960					
.081				-.8439						
.086			-.5242							
.094		-.5829								
.113	-.2687									
.150					-1.0897	-1.4492	-1.5208	-2.1728		
.157									-1.7815	
.163			.0000							
.177				-.8778						
.229		-.7262								
.246			-.9227							
.247	-.2068									
.250					-.8932	-1.0913	-1.2778	-1.6390		
.274				-.8191						
.345									-1.8510	
.362		-.5024								
.390			-.9106							
.400					-.6902	-.6497		-.9289		
.402				-.7273						
.418										-1.6465
.429	-.2647									
.497		-.6708								
.503									-1.7494	
.547	-.5721									
.550					-.4600	-.5224				
.565				-.6434						
.600								-.5681		
.633	-.5744									
.637			-.3652							
.650							-.4312			
.670									-1.4042	
.700		-.2647				-.4403				
.723										-1.5512
.725					-.3935					
.727	-.2781									
.750							-.4381	-.5299		
.760				-.4058						
.775					-.6074	-.4771				

ORIGINAL PAGE IS OF POOR QUALITY

AMES 11-073(OA148) -140A/B/C ORB LEFT WING TOP (XEBUBO)

ALPHA (5) = 12.027 BETA (4) = 4.242

SECTION (1)LEFT WING TOP SURF DEPENDENT VARIABLE CP

2Y/BW	.2350	.2990	.3640	.4270	.5340	.6730	.7800	.8870	.9720	1.0000
X/CW										
.793	-.1056									
.798			-.2789							
.808				-.5833						
.834		-.2692								
.839			-.4765							
.850					-.3202	-.1518	-.2877			
.857				-.3333						
.862									-1.0859	
.865		-.5294								
.879			-.2758							
.900		-.3156			-.2284			-.3240		
.905				-.2101						
.919			-.1855							
.950					-.12.9	-.0432	-.2029			
.953				-.1123						
.955			-.1114							
.965		-.1758								

ALPHA (5) = 12.061 BETA (5) = 8.297 MACH = .59650 Q = 594.19 P = 2385.7 RN/L = 4.8199

SECTION (1)LEFT WING TOP SURF DEPENDENT VARIABLE CP

2Y/BW	.2350	.2990	.3640	.4270	.5340	.6730	.7800	.8870	.9720	1.0000
X/CW										
.000	-.6813	-1.0823	-.5771	-.9900	-.9498	-1.1579	-1.3649	-1.7019	-2.2001	
.010		-.5922	-.5269		-1.9297	-2.3680	-2.8232	-2.5433		
.020		-.6130		.0000	-1.6734	-2.4522	-2.9515	-2.4951	-1.7850	
.040			-.5342	-.7627						
.041	-.7051									
.050					-1.4512	-1.9659	-2.8172	-2.3541		
.069									-1.7423	
.080					-1.3030					
.081				-.8044						
.086			-.5944							
.094		-.6351								
.113	-.3473									
.150					-.9736	-1.3272	-1.4946	-2.1862		
.157									-1.6549	
.163			.0000							
.177				-.8363						
.229		-.8546								
.245			-1.0536							
.247	-.2628									
.250					-.8930	-.9928	-1.2078	-1.7718		

AMES 11-073(OA148) -140A/B/C ORB LEFT WING TOP (XE8U80)

ALPHA (5) = 12.061 BETA (5) = 8.297

SECTION (1)LEFT WING TOP SURF DEPENDENT VARIABLE CP

2Y/BW	.2350	.2990	.3640	.4270	.5340	.6730	.7800	.8870	.9720	1.0000
X/CW										
.274				-.8435						
.345									-1.6915	
.362		-.4210								
.390			-.7909							
.400					-.6554	-.6945		-.8905		
.402				-.8869						
.418										-1.4844
.429	-.2554									
.497		-.6628								
.503									-1.7141	
.547	-.5632									
.550					-.5511	-.5811				
.565				-.6391						
.600								-.5138		
.633	-.5696									
.637			-.3631							
.650							-.5014			
.670									-1.3947	
.700		-.2941				-.4868				
.723										-1.5118
.725					-.4950					
.727	-.2987									
.750							-.5346	-.4904		
.760				-.4082						
.775					-.7285	-.4594				
.793	-.1419									
.798			-.3031							
.808				-.5730						
.834		-.2944								
.839			-.4758							
.850					-.3512	-.1676	-.3429			
.857				-.3230						
.862									-.9918	
.865		-.5458								
.879			-.2864							
.900		-.3349			-.2422			-.3017		
.905				-.2101						
.919			-.2121							
.950					-.1613	-.1017	-.2470			
.953				-.1057						
.955			-.1387							
.965		-.2144								

AMES 11-073(OA148) -140A/B/C OBS LEFT WING TOP (XEBUB1) (05 AUG 75)

REFERENCE DATA

SREF = 2690.0000 SQ.FT. XMRP = 1076.6800 IN. XO
LREF = 474.8000 IN. YMRP = .0000 IN. YO
BREF = 936.0000 IN. ZMRP = 375.0000 IN. ZO
SCALE = .0300

PARAMETRIC DATA

RUDDER = 10.000 SPDBRK = .000
BDFLAP = -11.700 L-ELVN = -10.000
R-ELVN = 10.000 MACH = 1.400

ALPHA (1) = -3.955 BETA (1) = .178 MACH = 1.3929 Q = 599.69 P = 441.59 RN/L = 2.9281

SECTION (1)LEFT WING TOP SURF DEPENDENT VARIABLE CP

2Y/BW	.2350	.2990	.3640	.4270	.5340	.6730	.7800	.8870	.9720	1.0000
X/CW										
.000	-.1607	-.0945	-.0552	.2550	.6380	.5720	.5259	.5359	-.3924	
.010		-.0539	-.0011		.6645	.6526	.6145	.5422		
.020		-.0671		.0000	.5900	.5559	.5336	.5073	-.0770	
.040			.0285	.3140						
.041	-.1149									
.050					.3906	.3607	.3430	.3401		
.069									-.1180	
.080					.2155					
.081				.2418						
.086			.1276							
.094		-.0541								
.113	-.1021									
.150					.0210	.0201	.0540	.0798		
.157									-.2353	
.163			.0000							
.177				.0833						
.229		.0291								
.246			.0599							
.247	-.0609									
.250					-.1056	-.1123	-.1168	-.1196		
.274				-.0337						
.315									-.2585	
.362		.1124								
.390			-.0316							
.400					-.2189	-.2653		-.3051		
.402				-.1944						
.418										-.4819
.429	.0287									
.497		-.0317								
.503									-.2683	
.547	.0466									
.550					-.2630	-.2988				
.565				-.1770						
.600								-.3486		
.533	-.0674									
.637			-.0557							
.650							-.1171			
.570									-.1271	

AMES 11-073(OA148) -140A/B/C ORB LEFT WING TOP (XE8U81)

ALPHA (1) = -3.955 BETA (1) = .178

SECTION (1)LEFT WING TOP SURF DEPENDENT VARIABLE CP

2Y/BW	.2350	.2990	.3640	.4270	.5340	.6730	.7800	.8870	.9720	1.0000
X/CW										
.700		-.0835				-.0011				
.723										-.5334
.725					.1594					
.727	-.1076									
.750							.0385	-.0250		
.760				.2285						
.775					.3508	.0688				
.793	.2895									
.798			.1864							
.808				.6247						
.834		.1104								
.839			.6180							
.850					.6170	.3645	.1154			
.857				.6000						
.862									.0136	
.865		.5766								
.879			.5561							
.900		.4748			.5675			.1342		
.905				.5184						
.919			.4759							
950					.5196	.5800	.1521			
.953				.4699						
.955			.4436							
.965		.4501								

ALPHA (2) = .028 BETA (1) = .177 MACH = 1.3894 Q = 599.62 P = 443.71 RN/L = 2.9315

SECTION (1)LEFT WING TOP SURF DEPENDENT VARIABLE CP

2Y/BW	.2350	.2990	.3640	.4270	.5340	.6730	.7800	.8870	.9720	1.0000
X/CW										
.000	-.0557	-.0376	-.0399	.3533	.6695	.6224	.5890	.5902	-.2067	
.010		-.0581	-.0213		.4931	.5465	.5117	.4152		
.020		-.0750		.0000	.3970	.4116	.3988	.3673	-.0699	
.040			.0062	.1646						
.041	-.0986									
.050					.2079	.1973	.1870	.1862		
.069									-.1345	
.080					.0512					
.081				.0538						
.086			.0639							
.094		-.1227								
.113	-.1131									
.150					-.1278	-.1273	-.09'0	-.0609		

AMES 11-073(OA148) -140A/B/C ORB LEFT WING TOP (XEBUBI)

ALPHA (2) = .028 BETA (1) = .177

SECTION (1)LEFT WING TOP SURF DEPENDENT VARIABLE CP

2Y/BW	.2350	.2990	.3640	.4270	.5340	.6730	.7800	.8870	.9720	1.0000
X/CW										
.157									-.2757	
.163			.0000							
.177				-.0584						
.229		-.0308								
.246			-.0388							
.247	-.1184									
.250					-.2493	-.2663	-.2556	-.2387		
.274				-.1627						
.345									-.3201	
.362		.0355								
.390			-.1330							
.400					-.3256	-.3875		-.4098		
.402				-.2824						
.418										-.2044
.429	-.0202									
.497		-.1126								
.523									-.3522	
.547	-.0248									
.550					-.3594	-.4116				
.565				-.2817						
.600								-.4270		
.633	-.1599									
.637			-.2342							
.650							-.4303			
.670									-.2458	
.720		-.2050				-.1273				
.723										-.2821
.725					-.0225					
.727	-.1859									
.750							-.0804	-.2339		
.760				.0858						
.775					.0408	-.1068				
.793	.1226									
.798			.0583							
.808				.3389						
.834		.0145								
.839			.4297							
.850					.2910	-.0532	-.0481			
.857				.4642						
.862									-.2038	
.865		.4145								
.879			.4546							
.900		.3706			.4433			-.0556		
.905				.4577						
.919			.4129							

AMES 11-073(OA148) -140A/B/C ORB LEFT WING TOP (XEBUBI)

ALPHA (2) = .028 BETA (1) = .177

SECTION (1)LEFT WING TOP SURF DEPENDENT VARIABLE CP

2Y/BW	.2350	.2990	.3640	.4270	.5340	.6730	.7800	.8870	.9720	1.0000
X/CW										
.950					.4721	.2449	-.0419			
.953				.4162						
.955			.3873							
.965		.3803								

ALPHA (3) = 3.945 BETA (1) = -3.872 MACH = 1.3917 Q = 599.67 P = 442.30 RN/L = 2.9228

SECTION (1)LEFT WING TOP SURF DEPENDENT VARIABLE CP

2Y/BW	.2350	.2990	.3640	.4270	.5340	.6730	.7800	.8970	.9720	1.0000
X/CW										
.000	.0527	.0195	-.0488	.3826	.7592	.7476	.7236	.7132	.0726	
.010		-.0256	-.0630		.3819	.5005	.4620	.3478		
.020		-.0442		.0000	.2802	.3312	.3210	.2914	-.0551	
.040			-.0505	.0376						
.041	-.0278									
.050					.0758	.1006	.0932	.0838		
.069									-.1082	
.080					-.0850					
.081				-.0725						
.086			-.0119							
.094		-.0929								
.113	-.0464									
.150					-.2967	-.2469	-.1945	-.1583		
.157									-.2876	
.163			.0000							
.177				-.1999						
.229		-.0946								
.246			-.1329							
.247	-.0720									
.250					-.3655	-.3834	-.3523	-.3185		
.274				-.2890						
.345									-.3574	
.362		-.0268								
.390			-.2328							
.400					-.4486	-.4957		-.4727		
.402				-.3767						
.418										-.1411
.429	-.0830									
.497		-.1699								
.503									-.4158	
.547	-.0705									
.550					-.4605	-.5263				
.565				-.3659						

AMES 11-073(OA148) -140A/B/C ORB LEFT WING TOP (XEBUB1)

ALPHA (3) = 3.945 BETA (1) = -3.872

SECTION (1)LEFT WING TOP SURF DEPENDENT VARIABLE CP

2Y/BW	.2350	.2990	.3640	.4270	.5340	.6730	.7800	.8870	.9720	1.0000
X/CW										
.600								-.4444		
.533	-.2225									
.537			-.3193							
.550							-.4097			
.670									-.4081	
.700		-.2665				-.2515				
.723										-.2717
.725					-.1537					
.727	-.2565									
.750							-.2958	-.2903		
.750				-.0650						
.775					-.1498	-.1832				
.793	-.1752									
.798			-.0381							
.808				.0371						
.834		-.0640								
.839			.2134							
.850					-.0780	-.2291	-.2271			
.857				.2205						
.862									-.3987	
.865		.3287								
.879			.3881							
.900		.3922			.0077			-.1940		
.905				.4000						
.919			.4428							
.950					.1911	-.1815	-.1984			
.955				.4437						
.975			.4197							
.975		.4184								

ALPHA (3) = 3.983 BETA (2) = .185 MACH = 1.3917 Q = 599.67 P = 442.30 RN/L = 2.9226

SECTION (1)LEFT WING TOP SURF DEPENDENT VARIABLE CP

2Y/BW	.2350	.2990	.3640	.4270	.5340	.6730	.7800	.8870	.9720	1.0000
X/CW										
.000	.0242	-.0905	-.2135	.2612	.6538	.6506	.6298	.6061	.0145	
.010		-.1417	-.2167		.2614	.3839	.3527	.2390		
.020		-.1448		.0000	.1749	.2285	.2278	.1808	-.1304	
.040			-.1617	-.0338						
.041	-.0752									
.050					-.0039	.0214	.0132	.0060		
.069									-.1748	
.080					-.1414					

AMES 11-073(OA148) -140A/B/C ORB LEFT WING TOP (XEBU8.)

ALPHA (3) = 3.983 BETA (2) = .185

SECTION (1)LEFT WING TOP SURF DEPENDENT VARIABLE CP

2Y/BW	.2350	.2990	.3640	.4270	.5340	.6730	.7800	.8870	.9720	1.0000
X/CW										
.081				-.1211						
.086			-.0806							
.094		-.1538								
.113	-.1111									
.150					-.3262	-.2886	-.2405	-.2100		
.157									-.3304	
.163			.0000							
.177				-.2213						
.229		-.1340								
.245			-.1531							
.247	-.1234									
.250					-.3744	-.4082	-.3824	-.3546		
.274				-.2951						
.345									-.3939	
.362		-.0439								
.390			-.2301							
.400					-.4442	-.5056		-.4922		
.402				-.3643						
.418										-.2731
.429	-.0781									
.497		-.1844								
.503									-.4234	
.547	-.0884									
.550					-.4314	-.5234				
.565				-.3590						
.600								-.4487		
.633	-.2421									
.637			-.3178							
.650							-.4056			
.670									-.4180	
.700		-.2875				-.2444				
.723										-.3968
.725					-.1330					
.727	-.2578									
.750							-.3020	-.2781		
.760				-.0521						
.775					-.1081	-.1941				
.793	-.0142									
.732			-.0772							
.808				.0884						
.834		-.0278								
.839			.2583							
.850					-.0068	-.1919	-.2201			
.857				.2292						
.862									-.3422	

AMES 11-073(OA148) -140A/B/C ORB LEFT WING TOP (XEBUB1)

ALPHA (3) = 3.983 BETA (2) = .185

SECTION (1)LEFT WING TOP SURF DEPENDENT VARIABLE CP

2Y/BW	.2350	.2990	.3640	.4270	.5340	.6730	.7800	.8870	.9720	1.0000
X/CW										
.865		.3454								
.875			.3314							
.900		.3107			.1152			-.1999		
.905				.3246						
.915			.3372							
.950					.2636	-.1003	-.1930			
.953				.3537						
.955			.3734							
.965		.3345								

ALPHA (3) = 3.932 BETA (3) = 4.246 MACH = 1.3917 Q = 599.67 P = 442.30 RN/L = 2.9226

SECTION (1)LEFT WING TOP SURF DEPENDENT VARIABLE CP

2Y/BW	.2350	.2990	.3640	.4270	.5340	.6730	.7800	.8870	.9720	1.0000
X/CW										
.000	-.0094	-.2367	-.4376	.1220	.5417	.5428	.5304	.5131	-.0731	
.010		-.2910	-.3860		.1368	.2636	.2344	.1339		
.020		-.2695		.0000	.0594	1246	.1196	.0813	-.2139	
.040			-.2486	-.0992						
.041	-.1216									
.050					-.0773	-.0543	-.0638	-.0778		
.069									-.2438	
.080					-.1916					
.081				-.1623						
.086			-.1362							
.094		-.2195								
.113	-.1660									
.150					-.3354	-.3250	-.2863	-.2599		
.157									-.3735	
.163			.0000							
.177				-.2110						
.229		-.1418								
.246			-.1469							
.247	-.1718									
.250					-.3541	-.4261	-.4103	-.3852		
.274				-.2713						
.345									-.4296	
.352		-.0411								
.390			-.2165							
.400					-.4108	-.5003		-.5026		
.402				-.3465						
.418										-.4367
.429	-.0787									

DATE 11 FEB 76 TABULATED PRESSURE DATA - OA148 (AMES 11-073-1)

AMES 11-073(OA148) -140A/B/C ORB LEFT WING TOP (XEBUB1)

ALPHA (3) = 3.932 BETA (3) = 4.246

SECTION (1)LEFT WING TOP SURF DEPENDENT VARIABLE CP

2Y/BW	.2350	.2990	.3640	.4270	.5340	.6730	.7800	.8870	.9720	1.0000
X/CW										
.497		-.1876								
.503									-.4011	
.547	-.0871									
.550					-.4209	-.5036				
.565				-.3474						
.600								-.3843		
.633	-.2514									
.637			-.3175							
.650							-.3509			
.670									-.3528	
.700		-.2895				-.2208				
.723										-.4560
.725					-.1116					
.727	-.2560									
.750							-.2779	-.2631		
.760				-.0780						
.775					-.0590	-.1643				
.793	.0959									
.798			-.0972							
.808				.1630						
.834		-.0299								
.839			.3151							
.850					.0754	-.1389	-.2155			
.857				.2625						
.862									-.2984	
.865		.3060								
.879			.3100							
.900		.2280			.1778			-.2213		
.905				.2955						
.919			.2727							
.950					.2677	.0006	-.1859			
.953				.2881						
.955			.2657							
.965		.2474								

DATE 11 FEB 76 TABULATED PRESSURE DATA - OA148 (AMES 11-073-1)

AMES 11-073(OA148) -140A/B/C ORB LEFT WING TOP (XEBUB1)

ALPHA (4) = 7.903 BETA (1) = .179 MACH = 1.3906 Q = 599.65 P = 443.00 RN/L = 2.9169

SECTION (1)LEFT WING TOP SURF DEPENDENT VARIABLE CP

2Y/BW	.2350	.2990	.3640	.4270	.5340	.6730	.7800	.8870	.9720	1.0000
X/CW										
.000	.0341	-.2359	-.4612	.0551	.5479	.5895	.5911	.5517	-.1521	
.010		-.3094	-.4155		-.0082	.1496	.1188	-.0023		
.020		-.2969		.0000	-.1166	-.0041	.0049	-.0574	-.3678	
.040			-.3367	-.3025						
.041	-.0714									
.050					-.2641	-.1977	-.1871	-.2131		
.069									-.3726	
.080					-.3655					
.081				-.3624						
.086			-.2400							
.094		-.1948								
.113	-.1094									
.150					-.5004	-.4418	-.4031	-.3754		
.157									-.4281	
.163			.0000							
.177				-.4626						
.229		-.1948								
.246			-.2945							
.247	-.1299									
.250					-.5524	-.5333	-.5054	-.4660		
.274				-.3882						
.345									-.4598	
.362		-.1651								
.390			-.3200							
.400					-.5694	-.5906		-.4293		
.402				-.4298						
.418										-.4488
.429	-.1802									
.497		-.2643								
.503									-.4293	
.547	-.1686									
.550					-.4925	-.5062				
.565				-.4177						
.600								-.4111		
.633	-.3227									
.637			-.4113							
.650							-.4388			
.670									-.4063	
.700		-.3723				-.4684				
.723										-.3876
.725					-.2215					
.727	-.3185									
.750							-.4190	-.3843		
.760				-.1644						
.775					-.1744	-.3996				

AMES 11-073(OA148) -140A/B/C ORB LEFT WING TOP (XEBUB1)

ALPHA (4) = 7.903 BETA (1) = .:79

SECTION (1)LEFT WING TOP SURF DEPENDENT VARIABLE CP

2Y/BW	.2350	.2990	.3640	.4270	.5340	.6730	.7800	.8870	.9720	1.0000
X/CW										
.793	-.1370									
.798			-.1889							
.808				.0208						
.834		-.0596								
.839			.2204							
.850					-.0776	-.3948	-.3668			
.857				.1167						
.862									-.3840	
.865		.2615								
.879			.2615							
.900		.3072			-.0215			-.3323		
.905				.1502						
.919			.2914							
.950					.0462	-.2989	-.3272			
.953				.1773						
.955			.2907							
.965		.2815								

ALPHA (5) = 11.906 BETA (1) = -3.868 MACH = 1.3903 Q = 599.44 P = 443.00 RN/L = 2.9079

SECTION (1)LEFT WING TOP SURF DEPENDENT VARIABLE CP

2Y/BW	.2350	.2990	.3640	.4270	.5340	.6730	.7800	.8870	.9720	1.0000
X/CW										
.000	.0197	-.2480	-.4094	.1085	.6104	.6533	.6467	.5842	-.1837	
.010		-.3196	-.3611		-.0334	.1209	.0585	-.0810		
.020		-.3046		.0000	-.1458	-.0374	-.0629	-.1359	-.4891	
.040			-.2963	-.3405						
.041	-.0134									
.050					-.3003	-.2326	-.2432	-.2895		
.060									-.4507	
.080					-.4022					
.081				-.4061						
.086			-.2148							
.094		-.1767								
.113	-.0572									
.150					-.5349	-.4826	-.4479	-.4366		
.157									-.4521	
.163			.0000							
.177				-.4974						
.229		-.1586								
.246			-.3056							
.247	-.0637									
.250					-.5625	-.5605	-.4745	-.4274		

AMES 11-073(OA148) -140A/B/C ORB LEFT WING TOP (XEBUB1)

ALPHA (5) = 11.906 BETA (1) = -3.868

SECTION (1)LEFT WING TOP SURF DEPENDENT VARIABLE CP

2Y/BW	.2350	.2990	.3640	.4270	.5340	.6730	.7800	.8870	.9720	1.0000
X/CW										
.274				-.4928						
.345									-.4722	
.362		-.1528								
.390			-.3937							
.400					-.5400	-.5250		-.4373		
.402				-.4971						
.418										-.4544
.429	-.1396									
.437		-.3689								
.503									-.4485	
.547	-.2167									
.550					-.5148	-.4877				
.565				-.4957						
.600								-.4234		
.633	-.4119									
.637			-.4748							
.650							-.4546			
.670									-.4306	
.700		-.4881				-.4734				
.723										-.4280
.725					-.4838					
.727	-.4238									
.750							-.4295	-.4160		
.760				-.3366						
.775					-.4639	-.4608				
.793	-.3793									
.798			-.2402							
.808				-.3547						
.834		-.1663								
.839			-.0820							
.850					-.4020	-.4412	-.4171			
.857				-.3155						
.862									-.4217	
.865		.1830								
.879			-.0649							
.900		.2367			-.3569			-.3819		
.905				-.1335						
.919			-.0615							
.950					-.3015	-.3662	-.3614			
.953				-.0874						
.955			.0032							
.965		.2457								

AMES 11-073(OA148) -140A/B/C ORB LEFT WING TOP (XEBUBI)

ALPHA (5) = 11.888 BETA (2) = .169 MACH = 1.3903 Q = 599.44 P = 443.00 RN/L = 2.9079

SECTION (1)LEFT WING TOP SURF DEPENDENT VARIABLE CP

2Y/BW	.2350	.2990	.3640	.4270	.5340	.6730	.7800	.8870	.9720	1.0000
X/CW										
.000	-.0699	-.3840	-.3802	-.0990	.4345	.4921	.4887	.4233	-.3578	
.010		-.3269	-.3765		-.1890	-.0342	-.0935	-.2147		
.020		-.3206		.0000	-.2890	-.1808	-.2019	-.2692	-.4755	
.040			-.3618	-.3931						
.041	-.0846									
.050					-.4152	-.3429	-.3516	-.3895		
.069									-.4765	
.080					-.4973					
.081				-.4277						
.086			-.3315							
.094		-.3649								
.113	-.1369									
.150					-.5973	-.5460	-.5129	-.4977		
.157									-.4823	
.163			.0000							
.177				-.4521						
.229		-.4324								
.246			-.4058							
.247	-.1205									
.250					-.5973	-.5620	-.4983	-.4728		
.274				-.4833						
.345									-.4803	
.362		-.3008								
.390			-.4345							
.400					-.5695	-.5458		-.4960		
.402				-.5161						
.418										-.4695
.419	-.2059									
.497		-.4324								
.503									-.4704	
.547	-.2875									
.550					-.5455	-.5252				
.565				-.4997						
.600								-.4648		
.633	-.4320									
.637			-.4855							
.650							-.4877			
.670									-.4602	
.700		-.4508				-.5038				
.723										-.4439
.725					-.4692					
.727	-.4180									
.750							-.4545	-.4587		
.760				-.2493						
.775					-.4491	-.4820				

AMES 11-073(OA148) -140A/B/C ORB LEFT WING TOP (XEBUB1)

ALPHA (5) = 11.888 BETA (2) = .169

SECTION (1)LEFT WING TOP SURF DEPENDENT VARIABLE CP

2Y/BW	.2350	.2990	.3640	.4270	.5340	.6730	.7800	.8870	.9720	1.0000
X/CW										
.793	-.2021									
.798			-.2326							
.808				-.2216						
.834		-.1479								
.839			.0403							
.850					-.3975	-.4471	-.4281			
.857				-.1736						
.862									-.4530	
.865		.1045								
.879			.1472							
.900		.1432			-.3343			-.4173		
.905				-.2398						
.919			.0418							
.950					-.2253	-.4083	-.3797			
.953				-.1412						
.955			.0256							
.965		.2009								

ALPHA (5) = 11.887 BETA (3) = 4.249 MACH = 1.3903 Q = 599.44 P = 443.00 RN/L = 2.9079

SECTION (1)LEFT WING TOP SURF DEPENDENT VARIABLE CP

2Y/BW	.2350	.2990	.3640	.4270	.5340	.6730	.7800	.8870	.9720	1.0000
X/CW										
.000	-.1570	-.4069	-.4271	-.3195	.2457	.3060	.3030	.2352	-.4871	
.010		-.3999	-.4305		-.3339	-.1843	-.2374	-.3545		
.020		-.3999		.0000	-.4143	-.3176	-.3389	-.3950	-.5145	
.040			-.4322	-.4094						
.041	-.1855									
.050					-.5124	-.4453	-.4535	-.4909		
.069									-.5102	
.080					-.5742					
.081				-.4403						
.086			-.4051							
.094		-.4590								
.113	-.1725									
.150					-.6103	-.6026	-.5741	-.5727		
.157									-.5121	
.163			.0000							
.177				-.4534						
.229		-.5590								
.245			-.4512							
.247	-.2063									
.250					-.6091	-.6254	-.5819	-.5839		

AMES 11-073(OA148) -140A/B/C ORB LEFT WING (XEBUBI)

ALPHA (5) = 11.887 BETA (3) = 4.249

SECTION (1)LEFT WING TOP SURF DEPENDENT VARIABLE CP

2Y/BW	.2350	.2990	.3640	.4270	.5340	.6730	.7800	.8870	.9720	1.0000
X/CW										
.274				-.4391						
.345									-.5135	
.362		-.4181								
.390			-.4338							
.400					-.6289	-.6178		-.5449		
.402				-.4894						
.418										-.5077
.429	-.2881									
.497		-.3943								
.503									-.5089	
.547	-.2593									
.550					-.5696	-.6026				
.565				-.5095						
.600								-.5208		
.633	-.4070									
.637			-.4935							
.650							-.5288			
.670									-.5017	
.700		-.3948				-.5599				
.723										-.4887
.725					-.2521					
.727	-.3901									
.750							-.4886	-.5030		
.760				-.2274						
.775					-.1964	-.4695				
.793	-.0739									
.798			-.2519							
.808				-.1718						
.834		-.1953								
.839			.0275							
.850					-.1683	-.4825	-.4338			
.857				-.0579						
.862									-.4932	
.865		-.0236								
.879			.0904							
.900		.0539			-.1673			-.4598		
.905				.0707						
.919			.1064							
.950					-.1673	-.3487	-.3819			
.953				-.0327						
.955			.1947							
.965		.1386								

AMES 11-073(OA148) -140A/B/C ORB LEFT WING TOP (XEBUB1)

ALPHA (6) = 15.870 BETA (1) = .160 MACH = 1.3887 Q = 599.91 P = 444.41 RN/L = 2.9086

SECTION (1)LEFT WING TOP SURF DEPENDENT VARIABLE CP

2Y/BW	.2350	.2990	.3640	.4270	.5340	.6730	.7800	.8870	.9720	1.0000
X/CW										
.000	-.1497	-.3916	-.3788	-.2438	.3150	.3574	.3446	.2393	-.4723	
.010		-.3831	-.3800		-.3319	-.1985	-.2654	-.3957		
.020		-.3875		.0000	-.4122	-.3354	-.3682	-.4416	-.5543	
.040			-.3759	-.3805						
.041	-.3310									
.050					-.5123	-.4598	-.4836	-.5302		
.069									-.5533	
.080					-.5754					
.081				-.4257						
.086			-.3430							
.094		-.4073								
.113	-.1368									
.150					-.6070	-.6130	-.5957	-.5856		
.157									-.5540	
.163			.0000							
.177				-.4781						
.229		-.4532								
.246			-.4594							
.247	-.1953									
.250					-.6044	-.5949	-.5676	-.5669		
.274				-.5177						
.345									-.5536	
.362		-.4919								
.390			-.4839							
.400					-.5870	-.5874		-.5674		
.402				-.5631						
.418										-.5490
.479	-.2749									
.497		-.5519								
.503									-.5507	
.547	-.3620									
.556					-.5903	-.5905				
.565				-.5356						
.600								-.5573		
.633	-.5286									
.637			-.5351							
.650							-.5840			
.670									-.5448	
.700		-.5267				-.5787				
.723										-.5342
.725					-.5473					
.727	-.5486									
.750							-.5340	-.5597		
.760				-.3247						
.775					-.4963	-.5537				

AMES 11-073(OA148) -140A/B/C ORB LEFT WING TOP (XEBU81)

ALPHA (6) = 15.870 BETA (1) = .160

SECTION (1)LEFT WING TOP SURF DEPENDENT VARIABLE CP

2Y/BW	.2350	.2990	.3640	.4270	.5340	.6730	.7800	.8870	.9720	1.0000
X/CW										
.793	-.3316									
.798			-.2783							
.808				-.3684						
.834		-.1955								
.839			-.0411							
.850					-.4837	-.4848	-.5098			
.857				-.3037						
.862									-.5458	
.865		-.0843								
.879			-.0679							
.900		.0207			-.5014			-.5515		
.905				-.3017						
.919			-.1158							
.950					-.4663	-.3962	-.4524			
.953				-.3283						
.955			-.0875							
.965		.0659								

AMES 11-073(OA148) -140A/B/C ORB LEFT WING TOP (XEBU82) (05 AUG 75)

REFERENCE DATA

SREF = 2690.0000 SQ.FT. XMRP = 1076.6800 IN. XO
LREF = 474.8000 IN. YMRP = .0000 IN. YO
BREF = 936.0660 IN. ZMRP = 375.0000 IN. ZO
SCALE = .0300

PARAMETRIC DATA

RUDDER = 10.000 SPDBRK = .000
BDFLAP = -11.700 L-ELVN = -10.000
R-ELVN = 10.000 MACH = 1.250

ALPHA (1) = -4.001 BETA (1) = .172 MACH = 1.2466 Q = 600.03 P = 551.58 RN/L = 3.0277

SECTION (1)LEFT WING TOP SURF DEPENDENT VARIABLE CP

2Y/BW	.2350	.2990	.3640	.4270	.5340	.6730	.7800	.8870	.9720	1.0000
X/CW										
.000	-.2255	-.0832	-.0737	.2392	.6055	.5247	.4742	.4895	-.5231	
.010		-.0726	-.0157		.6602	.6359	.5938	.5255		
.020		-.0876		.0000	.5850	.5398	.5117	.4863	-.1395	
.040			.0300	.3574						
.041	-.1774									
.050					.3912	.3451	.3202	.3127		
.069									-.1794	
.080					.2228					
.081				.2491						
.086			.1314							
.094		-.0300								
.113	-.1247									
.150					.0053	-.0123	.0098	.0221		
.157									-.3151	
.163			.0000							
.177				.0861						
.229		.0252								
.245			.0674							
.247	-.0309									
.250					-.1274	-.1630	-.1574	-.1801		
.274				-.0488						
.345									-.2529	
.362		.1377								
.390			-.0307							
.400					-.2613	-.3160		-.4019		
.402				-.2013						
.418										-.5927
.429	.0305									
.497		-.0109								
.503									-.0867	
.547	.0525									
.550					.0311	-.1358				
.565				.1241						
.600								-.0334		
.633	-.0568									
.637			.2052							
.650							.0378			
.670									.0120	

DATE 11 FEB 75 TABULATED PRESSURE DATA - OA148 (AMES 11-073-1) (XEBU82)

AMES 11-073(OA148) -140A/B/C ORB LEFT WING TOP

ALPHA (1) = -4.001 BETA (1) = .172

SECTION (1)LEFT WING TOP SURF DEPENDENT VARIABLE CP

2Y/BW	.2350	.2990	.3640	.4270	.5340	.6730	.7800	.8870	.9720	1.0000
X/CW										
.700		.1953				.1281				-.7115
.723					.3584					
.725										
.727	.1003						.1085	.0463		
.750										
.760				.3799						
.775					.6481	.5274				
.793	.3600									
.798			.3436							
.808				.6865						
.834		.2838								
.839			.6480							
.850					.5971	.5519	.4392			
.857				.5667					-.0130	
.862										
.865		.6220								
.879			.5434							
.900		.4754			.5038			.1859		
.905				.4825						
.919			.4550							
.950					.4526	.5129	.5891			
.953				.4241						
.955			.4064							
.965		.4150								

ALPHA (2) = .004 BETA (1) = .171 MACH = 1.2457 Q = 599.87 P = 552.28 RN/L = 3.0295

SECTION (1)LEFT WING TOP SURF DEPENDENT VARIABLE CP

2Y/BW	.2350	.2990	.3640	.4270	.5340	.6730	.7800	.8870	.9720	1.0000
X/CW										
.000	-.1083	-.0635	-.0344	.3802	.6537	.5939	.5577	.5617	-.3030	
.010		-.0964	-.0061		.4938	.5276	.4879	.3965		
.020		-.1211		.0000	.3954	.3877	.3705	.3423	-.1324	
.040			.0101	.1771						
.041	-.1567									
.050					.1788	.1525	.1464	.1392		
.069									-.2044	
.080					.0065					
.081				.0714						
.086			.0680							
.094		-.1468								
.113	-.1408				-.1815	-.1859	-.1677	-.1451		
.150										

AMES 11-073(OA148) -140A/B/C ORB LEFT WING TOP (XEBU82)

ALPHA (2) = .004 BETA (1) = .171

SECTION (1)LEFT WING TOP SURF DEPENDENT VARIABLE CP

2Y/BW	.2350	.2990	.3640	.4270	.5340	.6730	.7800	.8870	.9720	1.0000
X/CW										
.157									-.3687	
.163			.0000							
.177				-.0834						
.229		-.0260								
.246			-.0469							
.247	-.1274									
.250					-.2831	-.3365	-.3401	-.3328		
.274				-.1900						
.345									-.3965	
.382		.0653								
.390			-.1566							
.400					-.3808	-.4503		-.5204		
.402				-.3366						
.418										-.1808
.429	-.0111									
.497		-.1139								
.503									-.3144	
.547	-.0232									
.550					-.3774	-.4802				
.565				-.2195						
.600								-.2682		
.633	-.1693									
.637			-.0364							
.650							-.1120			
.670									-.1424	
.700		-.0759				-.1335				
.723										-.3095
.725					.0915					
.727	-.1855									
.750							-.0873	-.1638		
.760				.2380						
.775					.2764	-.0402				
.793	.2128									
.798			.2252							
.808				.5088						
.834		.1498								
.839			.5216							
.850					.5712	.3334	-.0309			
.857				.5259						
.862									-.1298	
.865		.5196								
.879			.4950							
.900		.4183			.5028			-.1090		
.905				.4557						
.919			.4222							

DATE 11 FEB 76 TABULATED PRESSURE DATA - 0A148 (AMES 11-073-1)

AMES 11-073(0A148) -140A/B/C ORB LEFT WING TOP (XEBU82)

ALPHA (2) = .004 BETA (1) = .171

SECTION (1)LEFT WING TOP SURF DEPENDENT VARIABLE CP

2Y/BW	.2350	.2990	.3640	.4270	.5340	.6730	.7800	.8870	.9720	1.0000
X/CW										
.950										
.953					.4341	.5031	-.0033			
.955				.3946						
.955			.3753							
		.3932								

ALPHA (3) = 3.910 BETA (1) = -3.880 MACH = 1.2454 Q = 599.82 P = 552.51 RN/L = 3.0275

SECTION (1)LEFT WING TOP SURF DEPENDENT VARIABLE CP

2Y/BW	.2350	.2990	.3640	.4270	.5340	.6730	.7800	.8870	.9720	1.0000
X/CW										
.000	-.0042	-.0004	-.1103	.4161	.7472	.7196	.6962	.6819	.0485	
.010		-.0505	-.1224		.3631	.4619	.4168	.2053		
.020		-.0810		.0000	.2433	.2778	.2646	.2179	-.1276	
.040			-.0869	.0400						
.041	-.0779									
.050										
.069					.0276	.0260	.0181	-.0032		
.080										
.081					-.1518				-.1853	
.086				-.0879						
.094			-.0140							
.113		-.1420								
.150	-.0733									
.157										
.163					-.3531	-.3413	-.2904	-.2593		
.177			.0000							
.229									-.3917	
.245		-.1096		-.2304						
.247	-.1023									
.250			-.1395							
.274										
.345					-.4526	-.4869	-.4622	-.4279		
.362				-.3288						
.390		.0003								
.400									-.4600	
.402			-.2630							
.418					-.5125	-.5978		-.4495		
.429	-.0537			-.4323						
.497										
.503		-.1843								-.2280
.547	-.0716									
.550									-.4123	
.565					-.5192	-.4641				
				-.4154						

AMES 11-073(OA148) -140A/B/C ORB LEFT WING TOP (XE8U82)

ALPHA (3) = 3.910 BETA (1) = -3.880

SECTION (1)LEFT WING TOP SURF DEPENDENT VARIABLE CP

2Y/BW	.2350	.2990	.3640	.4270	.5340	.6730	.7800	.8870	.9720	1.0000
X/CW										
.600								-.3211		
.633	-.2532									
.637			-.3562							
.650							-.3344			
.670									-.3602	
.700		-.3349				-.2869				
.723										-.3594
.725					-.1308					
.727	-.3043									
.750							-.2890	-.2661		
.760				.0376						
.775					-.1458	-.2304				
.793	.0117									
.798			.1150							
.808				.2183						
.834		.0860								
.839			.4248							
.850					.0931	-.2220	-.2689			
.857				.4871						
.862									-.2994	
.865		.5603								
.879			.5546							
.900		.4688			.3477			-.2167		
.905				.5446						
.919			.4910							
.950					.5310	-.0191	-.2416			
.953				.4612						
.955			.4301							
.955		.4375								

ALPHA (3) = 3.950 BETA (2) = .192 MACH = 1.2454 Q = 599.82 P = 552.51 RN/L = 3.0275

SECTION (1)LEFT WING TOP SURF DEPENDENT VARIABLE CP

2Y/BW	.2350	.2990	.3640	.4270	.5340	.6730	.7800	.8870	.9720	1.0000
X/CW										
.000	-.0372	-.1501	-.3001	.2886	.6473	.6327	.6081	.5883	-.0313	
.010		-.2109	-.2611		.2375	.3555	.3132	.1844		
.020		-.2031		.0000	.1487	.1864	.1726	.1161	-.2111	
.040			-.1478	-.0342						
.041	-.1435									
.050					-.0378	-.0370	-.0515	-.0751		
.069									-.2610	
.080					-.1951					

AMES 11-073(OA148) -140A/B/C ORB LEFT WING TOP (XEBU82)

ALPHA (3) = 3.950 BETA (2) = .192

SECTION (1)LEFT WING TOP SURF DEPENDENT VARIABLE CP

2Y/BW	.2350	.2990	.3640	.4270	.5340	.6730	.7800	.8870	.9720	1.0000
X/CW										
.081				-.1377						
.086			-.0575							
.094		-.2179								
.113	-.1539									
.150					-.3637	-.3706	-.3301	-.3029		
.157									-.4387	
.163			.0000							
.177				-.2302						
.229		-.1118								
.246			-.1496							
.247	-.1648									
.250					-.4452	-.5008	-.4860	-.4625		
.274				-.3149						
.345									-.4828	
.362		-.0130								
.390			-.2570							
.400					-.4914	-.5921		-.4907		
.402				-.4244						
.418										-.3801
.429	-.0553									
.497		-.2080								
.533									-.4537	
.547	-.0916									
.550					-.5057	-.5758				
.565				-.3925						
.600								-.3515		
.633	-.2697									
.637			-.2742							
.650							-.3515			
.670									-.3568	
.700		-.3313				-.2527				
.723										-.4398
.725					-.1205					
.727	-.3075									
.750							-.3287	-.2912		
.760				.0542						
.775					-.0693	-.2136				
.793	.1162									
.798			.0600							
.808				.2540						
.834		-.0163								
.839			.4211							
.850					.2118	-.1530	-.2768			
.857				.4090						
.862									-.2586	

ORIGINAL PAGE IS
OF POOR QUALITY

AMES 11-073(OA148) -140A/B/C ORB LEFT WING TOP (XE8U82)

ALPHA (3) = 3.950 BETA (2) = .192

SECTION (1)LEFT WING TOP SURF DEPENDENT VARIABLE CP

2Y/BW	.2350	.2990	.3640	.4270	.5340	.6730	.7800	.8870	.9720	1.0000
X/CW										
.865		.5500								
.879			.4295							
.900		.3686			.4015			-.2418		
.905				.4259						
.919			.3869							
.950					.4274	.1537	-.2253			
.953				.3780						
.955			.3528							
.965		.3526								

ALPHA (3) = 3.915 BETA (3) = 4.246 MACH = 1.2454 Q = 599.82 P = 552.51 RN/L = 3.0275

SECTION (1)LEFT WING TOP SURF DEPENDENT VARIABLE CP

2Y/BW	.2350	.2990	.3640	.4270	.5340	.6730	.7800	.8870	.9720	1.0000
X/CW										
.000	-.0625	-.3350	-.3788	.1501	.5500	.5350	.5119	.4865	-.1413	
.010		-.3761	-.2696		.1339	.2374	.1923	.0558		
.020		-.3381		.0000	.0639	.0858	.0653	.0028	-.3144	
.040			-.2212	-.0772						
.041	-.1854									
.050					-.0935	-.1102	-.1334	-.1670		
.069									-.3432	
.080					-.2217					
.081				-.1445						
.086			-.1890							
.094		-.2822								
.113	-.2125									
.150					-.3620	-.4057	-.3783	-.3630		
.157									-.4829	
.163			.0000							
.177				-.2269						
.229		-.1174								
.246			-.1306							
.247	-.2108									
.250					-.4214	-.5091	-.5116	-.4995		
.274				-.2908						
.345									-.4723	
.362		-.0038								
.390			-.2353							
.400					-.4772	-.5864		-.5198		
.402				-.4080						
.418										-.6051
.429	-.0545									

AMES 11-073(OA148) -140A/B/C ORB LEFT WING TOP (XEBUB2)

ALPHA (3) = 3.915 BETA (3) = 4.246

SECTION (1)LEFT WING TOP SURF DEPENDENT VARIABLE CP

2Y/BW	.2350	.2990	.3640	.4270	.5340	.6730	.7900	.8870	.9720	1.0000
X/CW										
.497		-.1984								
.503									-.4139	
.547	-.0843									
.550					-.4706	-.5747				
.555				-.3471						
.630								-.3712		
.633	-.2795									
.637			-.2283							
.650							-.3422			
.670									-.2626	
.700		-.3083				-.2037				
.723										-.4731
.725					-.0624					
.727	-.2980									
.750							-.3130	-.3069		
.760				.0587						
.775					.0533	-.1625				
.793	.1433									
.796			-.0377							
.808				.3297						
.834		-.0472								
.839			.4247							
.850					.3128	-.0406	-.2384			
.857				.3388						
.862									-.1975	
.865		.5193								
.879			.3493							
.900		.2748			.3876			-.2701		
.905				.3043						
.919			.2933							
.950					.3379	.3409	-.1647			
.953				.2757						
.955			.2725							
.965		.2643								

AMES 11-073(OA148) -140A/B/C ORB LEFT WING TOP (XEBU82)

ALPHA (4) = 7.875 BETA (1) = .170 MACH = 1.2457 Q = 599.87 P = 552.28 RN/L = 3.0295

SECTION (1)LEFT WING TOP SURF DEPENDENT VARIABLE CP

2Y/BW	.2350	.2990	.3640	.4270	.5340	.6730	.7800	.8870	.9720	1.0000
X/CW										
.000	-.0048	-.3277	-.5697	-.0152	.5124	.5637	.5604	.5055	-.2760	
.010		-.4061	-.5213		-.1018	.0721	.0252	-.1165		
.020		-.3780		.0000	-.2051	-.0853	-.0946	-.1777	-.5045	
.040			-.4178	-.3816						
.041	-.1323									
.050					-.3337	-.2813	-.2920	-.3429		
.069									-.4712	
.080					-.4326					
.081				-.3221						
.086			-.3108							
.094		-.2608								
.113	-.1531									
.150					-.5660	-.5457	-.5156	-.5018		
.157									-.4770	
.163			.0000							
.177				-.3785						
.229		-.2451								
.246			-.2692							
.247	-.1724									
.250					-.6116	-.6414	-.5656	-.4785		
.274				-.4046						
.345									-.4487	
.362		-.1180								
.390			-.3487							
.400					-.5894	-.6697		-.4848		
.402				-.4748						
.418										-.4314
.429	-.1574									
.497		-.2880								
.503									-.4233	
.547	-.1499									
.550					-.5364	-.5794				
.565				-.4762						
.600								-.4444		
.633	-.3449									
.637			-.4766							
.650							-.4790			
.670									-.4039	
.700		-.4206				-.5097				
.723										-.3554
.725					-.1592					
.727	-.3671									
.750							-.4602	-.3717		
.760				-.0418						
.775					-.0907	-.3566				

AMES 11-073(OA148) -140A/B/C ORB LEFT WING TOP (XEBUB2)

ALPHA (4) = 7.875 BETA (1) = .170

SECTION (1)LEFT WING TOP SURF DEPENDENT VARIABLE CP

2Y/BW	.2350	.2990	.3640	.4270	.5340	.6730	.7800	.8870	.9720	1.0000
X/CW										
.793	-.0207									
.798			-.1213							
.808				.1952						
.834		-.0459								
.839			.4013							
.850					.0478	-.3232	-.4410			
.857				.2121						
.862									-.3957	
.865		.6003								
.879			.3665							
.900		.3357			.0983			-.3197		
.905				.2051						
.919			.3278							
.950					.1262	-.1413	-.3971			
.953				.2041						
.955			.3121							
.965		.3073								

ALPHA (5) = 11.893 BETA (1) = -3.862 MACH = 1.2456 Q = 600.06 P = 552.51 RN/L = 3.0278

SECTION (1)LEFT WING TOP SURF DEPENDENT VARIABLE CP

2Y/BW	.2350	.2990	.3640	.4270	.5340	.6730	.7800	.8870	.9720	1.0000
X/CW										
.000	.0545	-.3198	-.5185	.0032	.5261	.5679	.5536	.4596	-.3641	
.010		-.4074	-.4790		-.1871	-.0352	-.1239	-.2858		
.020		-.3932		.0000	-.3032	-.2044	-.2510	-.3519	-.5401	
.040			-.3912	-.4648						
.041	-.0660									
.050					-.4518	-.3945	-.4195	-.4865		
.069									-.4994	
.080					-.5559					
.081				-.5245						
.086			-.3004							
.094		-.2446								
.113	-.0873									
.150					-.6915	-.6439	-.5948	-.5516		
.157									-.4951	
.163			.0000							
.177				-.6133						
.229		-.2170								
.245			-.3829							
.247	-.1127									
.250					-.6546	-.6117	-.5478	-.5579		

AMES 11-073(OA148) -140A/B/C ORB LEFT WING TOP (XEBU82)

ALPHA (5) = 11.893 BETA (1) = -3.862

SECTION (1)LEFT WING TOP SURF DEPENDENT VARIABLE CP

2Y/BW	.2350	.2990	.3640	.4270	.5340	.6730	.7800	.8870	.9720	1.0000
X/CW										
.274				-.5823						
.345									-.4960	
.362		-.2069								
.390			-.4874							
.400					-.6316	-.5988		-.5642		
.402				-.5954						
.418										-.4935
.429	-.1909									
.497		-.4590								
.503									-.4861	
.547	-.2959									
.550					-.5971	-.5842				
.565				-.5538						
.600								-.5173		
.633	-.4701									
.637			-.5237							
.650							-.4955			
.670									-.4483	
.700		-.5117				-.5392				
.723										-.4351
.725					-.5283					
.727	-.4545									
.750							-.4682	-.4901		
.760				-.2902						
.775					-.4994	-.5421				
.793	-.1563									
.798			-.2758							
.808				-.1845						
.834		-.0520								
.839			.1454							
.850					-.4156	-.4832	-.4205			
.857				-.1322						
.862									-.4127	
.865		.3487								
.879			.0192							
.900		.2887			-.3809			-.4361		
.905				-.0378						
.919			.0136							
.950					-.3225	-.4507	-.3788			
.953				.0395						
.965			.1398							
.965		.2673								

AMES 11-073(OA148) -140A/B/C ORB LEFT WING TOP (XE8UB2)

ALPHA (5) = 11.948 BETA (2) = .178 MACH = 1.2456 Q = 600.06 P = 552.51 RN/L = 3.0278

SECTION (1)LEFT WING TOP SURF DEPENDENT VARIABLE CP

2Y/BW	.2350	.2990	.3640	.4270	.5340	.6730	.7800	.8870	.9720	1.0000
X/CW										
.000	-.0278	-.4897	-.4802	-.2069	.3418	.3935	.3759	.2754	-.5388	
.010		-.4306	-.4690		-.3498	-.2008	-.2890	-.4465		
.020		-.4151		.0000	-.4512	-.3516	-.4036	-.4908	-.5754	
.040			-.4582	-.4963						
.041	-.1394									
.050					-.5744	-.5114	-.5427	-.6044		
.069									-.5298	
.080					-.6577					
.081				-.5171						
.085			-.4298							
.094		-.4721								
.113	-.1868									
.150					-.7580	-.7091	-.6149	-.6163		
.157									-.5240	
.163			.0000							
.177				-.5030						
.229		-.5428								
.246			-.4797							
.247	-.1725									
.250					-.6971	-.6589	-.6037	-.6304		
.274				-.5251						
.345									-.5163	
.362		-.3810								
.390			-.4599							
.400					-.6679	-.6465		-.5572		
.402				-.5285						
.418										-.5172
.429	-.2633									
.497		-.4224								
.503									-.5136	
.547	-.2701									
.550					-.6041	-.6082				
.565				-.5452						
.600								-.5315		
.633	-.4654									
.637			-.5585							
.650							-.5511			
.670									-.5078	
.700		-.4890				-.5723				
.723										-.4882
.725					-.3744					
.727	-.4472									
.750							-.5218	-.5320		
.750				-.1616						
.775					-.3473	-.5600				

AMES 11-073(OA148) -140A/B/C ORB LEFT WING TOP (XEBUB2)

ALPHA (5) = 11.948 BETA (2) = .178

SECTION (1)LEFT WING TOP SURF DEPENDENT VARIABLE CP

2Y/BW	.2350	.2990	.3640	.4270	.5340	.6730	.7800	.8870	.9720	1.0000
X/CW										
.793	-.1359									
.798			-.1963							
.808				.0141						
.834		-.1078								
.839			.2937							
.850					-.2633	-.5233	-.4724			
.857				-.1320						
.862									-.4940	
.865		.2250								
.879			.2004							
.900		.2664			-.2041			-.5097		
.905				-.1749						
.919			.1215							
.950					-.0626	-.4333	-.4007			
.953				-.1185						
.955			.1358							
.965		.2466								

ALPHA (5) = 11.969 BETA (3) = 4.251 MACH = 1.2456 Q = 600.06 P = 552.51 RN/L = 3.0278

SECTION (1)LEFT WING TOP SURF DEPENDENT VARIABLE CP

2Y/BW	.2350	.2990	.3640	.4270	.5340	.6730	.7800	.8870	.9720	1.0000
X/CW										
.000	-.0981	-.5246	-.5322	-.4513	.1527	.1923	.1847	.0826	-.6433	
.010		-.5103	-.5334		-.5034	-.3687	-.4345	-.5592		
.020		-.5081		.0000	-.5788	-.5020	-.5306	-.6074	-.5843	
.040			-.5378	-.4462						
.041	-.2099									
.050					-.6765	-.6195	-.6382	-.6911		
.060									-.5700	
.080					-.6919					
.081				-.4394						
.086			-.5082							
.094		-.5814								
.113	-.2366									
.150					-.6936	-.7178	-.6709	-.6574		
.157									-.5572	
.163			.0000							
.177				-.4613						
.229		-.6854								
.245			-.4956							
.247	-.2681									
.250					-.6598	-.6930	-.6680	-.6256		

AMES 11-073(OA148) -140A/B/C ORB LEFT WING TOP (XEBU82)

ALPHA (5) = 11.969 BETA (3) = 4.251

SECTION (1)LEFT WING TOP SURF DEPENDENT VARIABLE CP

2Y/BW	.2350	.2990	.3640	.4270	.5340	.6730	.7800	.8870	.9720	1.0000
X/CW										
.274				-.4843						
.345									-.5581	
.362		-.3797								
.390			-.5713							
.400					-.6496	-.6595		-.5856		
.402				-.5396						
.418										-.5517
.429	-.2996									
.497		-.3865								
.503									-.5555	
.547	-.2373									
.550					-.5611	-.6396				
.565				-.5493						
.600								-.5602		
.633	-.4284									
.637			-.5364							
.650							-.6212			
.670									-.5336	
.700		-.4285				-.5726				
.723										-.4918
.725					-.0965					
.727	-.4224									
.750							-.5895	-.5502		
.760				-.2032						
.775					-.0234	-.4432				
.793	-.0420									
.798			-.2123							
.808				.0585						
.834		-.2053								
.839			.2315							
.850					-.1018	-.4182	-.5492			
.857				.1552						
.862									-.5040	
.865		.1291								
.879			.3250							
.900		.1757			-.1883			-.5313		
.905				.0158						
.919			.2184							
.950					-.1518	-.1883	-.4752			
.953				-.0461						
.955			.1470							
.965		.1771								

AMES 11-073(OA148) -140A/B/C ORB LEFT WING TOP (XEBU83) (05 AUG 75)

REFERENCE DATA

SREF = 2690.0000 SQ.FT. XMRP = 1076.6800 IN. XO
LREF = 474.0000 IN. YMRP = .0000 IN. YO
BREF = 936.0690 IN. ZMRP = 375.0000 IN. ZO
SCALE = .0300

PARAMETRIC DATA

RUDDER = 10.000 SPDBRK = .000
BDFLAP = -11.700 L-ELVN = -10.000
R-ELVN = 10.000 MACH = 1.100

ALPHA (1) = -3.943 BETA (1) = .171 MACH = 1.0992 Q = 599.30 P = 708.59 RN/L = 3.1942

SECTION (1)LEFT WING TOP SURF DEPENDENT VARIABLE CP

2Y/BW	.2350	.2990	.3640	.4270	.5340	.6730	.7800	.8870	.9720	1.0000
X/CW										
.000	-.2800	-.1183	-.0977	.3016	.5506	.4617	.4036	.4142	-.[illegible]765	
.010		-.0917	-.0217		.6714	.6406	.6060	.5444		
.020		-.0818		.0000	.5989	.5589	.5387	.5025	-.2153	
.040			.0477	.4298						
.041	-.2441									
.050					.4136	.3741	.3559	.3391		
.069									-.2531	
.080					.2476					
.081				.3384						
.086			.2326							
.094		-.0406								
.113	-.1841									
.150					.0432	.0393	.0392	.0111		
.157									-.3650	
.163			.0000							
.177				.0979						
.229		.0213								
.246			.1650							
.247	-.0157									
.250					-.1021	-.1654	-.1739	-.2303		
.274				-.0126						
.345									-.2744	
.362		.2000								
.390			.0063							
.400					.0533	-.0391		-.3055		
.402				-.0240						
.418										-.7875
.429	.1140									
.497		.0351								
.503									-.0927	
.547	.1336									
.550					.1014	-.0349				
.565				.1981						
.600								.2351		
.633	.0576									
.637			.2468							
.652							.2709			
.670									.3366	

AMES 11-073(OA148) -140A/B/C ORB LEFT WING TOP (XE8U83)

ALPHA (1) = -3.943 BETA (1) = .171

SECTION (1)LEFT WING TOP SURF DEPENDENT VARIABLE CP

2Y/BW	.2350	.2990	.3640	.4270	.5340	.6730	.7800	.8870	.9720	1.0000
X/CW										
.700		.2714				.3358				
.723										-.9093
.725					.3831					
.727	.2403									
.750							.6496	.5797		
.763				.3671						
.775					.6758	.5649				
.793	.3871									
.799			.3353							
.808				.6552						
.834		.2970								
.839			.6251							
.850					.5129	.4454	.5060			
.857				.5033						
.862									.2782	
.865		.6243								
.879			.4844							
.900		.4333			.4136			.4156		
.905				.4104						
.919			.3921							
.950					.3488	.3993	.4011			
.953				.3367						
.955			.3290							
.965		.3466								

ALPHA (2) = .065 BETA (1) = .171 MACH = 1.0980 Q = 599.15 P = 710.01 RN/L = 3.1985

SECTION (1)LEFT WING TOP SURF DEPENDENT VARIABLE CP

2Y/BW	.2350	.2990	.3640	.4270	.5340	.6730	.7800	.8870	.9720	1.0000
X/CW										
.000	-.1742	-.1309	-.0352	.4357	.6335	.5567	.5109	.5253	-.2165	
.010		-.1720	-.0110		.4948	.5045	.4546	.3629		
.020		-.1934		.0000	.3912	.3569	.3367	.3025	-.1508	
.040			.0314	.2415						
.041	-.2343									
.050					.1689	.1119	.0961	.0846		
.069									-.2334	
.080					-.0178					
.081				.1064						
.085			.1285							
.094		-.1129								
.113	-.1912									
.150					-.2356	-.2647	-.2428	-.2264		

AMES 11-073(OA148) -140A/B/C ORB LEFT WING TOP (XE8083)

ALPHA (2) = .065 BETA (1) = .171

SECTION (1) LEFT WING TOP SURF DEPENDENT VARIABLE CP

2Y/BW	.2350	.2990	.3640	.4270	.5340	.6730	.7800	.8870	.9720	1.0000
X/CW										
.157									-.4410	
.163			.0000							
.177				-.0975						
.229		-.0320								
.245			-.0022							
.247	-.0958									
.260					-.3341	-.3759	-.4257	-.4441		
.274				-.2197						
.345									-.1058	
.382		.1020								
.390			-.1841							
.400					-.4447	-.5332		-.4900		
.402				-.3724						
.418										-.1556
.429	.0674									
.497		-.1124								
.503									.0095	
.547	.0035									
.550					.0388	-.0284				
.565				.1260						
.600								-.0728		
.633	-.2130									
.637			.1745							
.650							.1198			
.670									.0626	
.700		.1647				.2578				
.725										-.3525
.775					.3534					
.797	.1201									
.750							.4708	.0718		
.760				.3491						
.775					.5936	.4960				
.793	.3225									
.798			.3254							
.809				.5715						
.834		.2755								
.839			.5437							
.850					.4943	.4401	.4510			
.857				.4774						
.862									.0075	
.865		.5403								
.879			.4586							
.900		.4114			.3960			.2503		
.905				.3986						
.913			.3740							

AMES 11-073(OA148) -140A/B/C ORB LEFT WING TOP (XE8U83)

ALPHA (2) = .065 BETA (1) = .171

SECTION (1)LEFT WING TOP SURF DEPENDENT VARIABLE CP

2Y/BW	.2350	.2990	.3640	.4270	.5340	.6730	.7800	.8870	.9720	1.0000
X/CW										
.950					.3259	.3734	.3538			
.953				.3099						
.955			.3036							
.965		.3182								

ALPHA (3) = 3.859 BETA (1) = -3.876 MACH = 1.0981 Q = 598.75 P = 709.30 RN/L = 3.1983

SECTION (1)LEFT WING TOP SURF DEPENDENT VARIABLE CP

2Y/BW	.2350	.2990	.3640	.4270	.5340	.6730	.7800	.8870	.9720	1.0000
X/CW										
.000	-.0704	-.0715	-.1248	.4843	.7324	.7044	.6872	.6537	.0127	
.010		-.1424	-.1061		.3427	.4157	.3486	.1574		
.020		-.1639		.0000	.2167	.2186	.1823	.0967	-.2518	
.040			-.0505	.0701						
.041	-.1417									
.050					-.0326	-.0550	-.0901	-.1501		
.069									-.3218	
.080					-.2174					
.081				-.0922						
.085			.0043							
.094		-.2230								
.113	-.1204									
.150					-.3902	-.4540	-.4154	-.4060		
.157									-.5532	
.153			.0000							
.177				-.2585						
.229		-.0812								
.246			-.1382							
.247	-.1549									
.250					-.5051	-.5811	-.6006	-.5731		
.274				-.3678						
.345									-.5219	
.362		.0507								
.390			-.3030							
.400					-.5922	-.6674		-.5019		
.402				-.5040						
.418										-.4356
.429	.0087									
.497		-.1950								
.503									-.5156	
.547	-.0684									
.550					-.1366	-.4235				
.565				-.1190						

AMES 11-073(OA148) -140A/B/C ORB LEFT WING TOP (XEBUB3)

ALPHA (3) = 3.859 BETA (1) = -3.876

SECTION (1)LEFT WING TOP SURF DEPENDENT VARIABLE CP

2Y/BW	.2350	.2990	.3640	.4270	.5340	.6730	.7800	.8870	.9720	1.0000
X/CW										
.600								-.3197		
.633	-.3115									
.637			-.0651							
.650							-.3086			
.670									-.2804	
.700		-.0720				-.0049				
.723										-.3778
.725					.0717					
.727	-.2181									
.750							-.2360	-.2409		
.760				.3257						
.775					.2215	.0751				
.793	.2600									
.798			.3379							
.809				.5547						
.834		.2847								
.839			.6060							
.850					.4334	.1675	-.1404			
.857				.5233						
.962									-.1571	
.865		.6513								
.879			.5026							
.900		.4505			.4387			-.1905		
.905				.4168						
.919			.4037							
.950					.3557	.2354	-.0901			
.953				.3316						
.955			.3326							
.965		.3585								

ALPHA (3) = 3.908 BETA (2) = .189 MACH = 1.0981 Q = 598.75 P = 709.30 RN/L = 3.1983

SECTION (1)LEFT WING TOP SURF DEPENDENT VARIABLE CP

2Y/BW	.2350	.2990	.3640	.4270	.5340	.6730	.7800	.8870	.9720	1.0000
X/CW										
.000	-.1117	-.2315	-.2443	.3951	.6532	.6264	.6144	.5693	-.0948	
.010		-.3034	-.2010		.2300	.3039	.2367	.0499		
.020		-.3034		.0000	.1198	.1201	.0836	-.0207	-.3500	
.040			-.1037	.0063						
.041	-.2228									
.050					-.0861	-.1253	-.1642	-.2243		
.069									-.4002	
.080					-.2623					

AMES 11-073(OA148) -140A/B/C ORB LEFT WING TOP (XE8U83)

ALPHA (3) = 3.908 BETA (2) = .189

SECTION (1)LEFT WING TOP SURF DEPENDENT VARIABLE CP

2Y/BW	.2350	.2990	.3640	.4270	.5340	.6730	.7800	.8870	.9720	1.0000
X/CW										
.081				-.1242						
.086			-.0083							
.094		-.3010								
.113	-.2044									
.150					-.4061	-.4798	-.4565	-.4507		
.157									-.5982	
.163			.0000							
.177				-.2632						
.229		-.0877								
.245			-.1496							
.247	-.2278									
.250					-.4984	-.5920	-.6175	-.5954		
.274				-.3620						
.345									-.5373	
.362		.0414								
.390			-.3042							
.400					-.5690	-.6852		-.5164		
.402				-.4952						
.418										-.6291
.429	.0142									
.497		-.2141								
.503									-.4121	
.547	-.0836									
.550					-.1439	-.3757				
.565				-.1099						
.600								-.3425		
.633	-.3222									
.637			-.0469							
.650							-.3016			
.670									-.1535	
.700		-.0567				.0381				
.723										-.3980
.725					.1309					
.727	-.1584									
.750							-.2187	-.2580		
.760				.2920						
.775					.3240	.1184				
.793	.2560									
.798			.2865							
.808				.5019						
.834		.2010								
.839			.5285							
.850					.4550	.2357	.0089			
.857				.4634						
.862									-.0958	

AMES 11-073(OA148) -140A/B/C ORB LEFT WING TOP (XEBU83)

ALPHA (3) = 3.908 BETA (2) = .189

SECTION (1)LEFT WING TOP SURF DEPENDENT VARIABLE CP

2Y/BW	.2350	.2990	.3640	.4270	.5340	.6730	.7800	.8870	.9720	1.0000
X/CW										
.865		.6364								
.879			.4398							
.900		.3952			.3827			-.2131		
.905				.3736						
.919			.3542							
.950					.3104	.2554	.1947			
.953				.2943						
.955			.2899							
.965		.3158								

ALPHA (3) = 3.913 BETA (3) = 4.243 MACH = 1.0981 Q = 598.75 P = 709.30 RN/L = 3.1983

SECTION (1)LEFT WING TOP SURF DEPENDENT VARIABLE CP

2Y/BW	.2350	.2990	.3640	.4270	.5340	.6730	.7800	.8870	.9720	1.0000
X/CW										
.000	-.1619	-.4479	-.3135	.3143	.5742	.5379	.5058	.4434	-.3085	
.010		-.4940	-.1718		.1252	.1846	.0969	-.0936		
.020		-.4525		.0000	.0410	.0177	-.0397	-.1639	-.5106	
.040			-.0976	-.0112						
.041	-.2909									
.050					-.1329	-.1979	-.2598	-.3335		
.069									-.5174	
.080					-.2778					
.021				-.1204						
.086			.0555							
.094		-.3228								
.113	-.2902									
.150					-.4145	-.5004	-.5087	-.5259		
.157									-.5991	
.163			.0000							
.177				-.2375						
.229		-.0805								
.246			-.1196							
.247	-.2460									
.250					-.4737	-.6133	-.6404	-.6132		
.274				-.3237						
.345									-.4389	
.362		.0671								
.390			-.2709							
.400					-.5538	-.6703		-.5437		
.402				-.4503						
.418										-.7462
.429	.0465									

AMES 11-073(OA148) -140A/B/C ORB LEFT WING TOP (XEBU83)

ALPHA (3) = 3.913 BETA (3) = 4.243

SECTION (1)LEFT WING TOP SURF DEPENDENT VARIABLE CP

2Y/BW	.2350	.2990	.3640	.4270	.5340	.6730	.7800	.8870	.9720	1.0000
X/CW										
.497		-.1801								
.503									-.3037	
.547	-.0525									
.550					-.1943	-.2965				
.565				-.1369						
.600								-.4029		
.633	-.2996									
.637			-.0443							
.650							-.3274			
.670									-.1449	
.700		-.0329				-.0074				
.723										-.4191
.725					.1588					
.727	-.1597									
.750							-.2049	-.3259		
.760				.2234						
.775					.3947	.1885				
.793	.1975									
.798			.1895							
.808				.4218						
.834		.0885								
.839			.4548							
.850					.4133	.2515	.1440			
.857				.3530						
.862									-.1398	
.865		.5410								
.879			.3610							
.900		.3125			.3246			-.2331		
.905				.2912						
.919			.2859							
.950					.2612	.3053	.3438			
.953				.2255						
.955			.2348							
.965		.2534								

AMES 11-073(OA148) -140A/B/C ORB LEFT WING TOP (XE8U83)

ALPHA (4) = 8.023 BETA (1) = .173 MACH = 1.0972 Q = 598.87 P = 710.71 RN/L = 3.1996

SECTION (1)LEFT WING TOP SURF DEPENDENT VARIABLE CP

2Y/BW	.2350	.2990	.3640	.4270	.5340	.6730	.7800	.8870	.9720	1.0000
X/CW										
.000	-.0988	-.4636	-.7121	.0766	.5103	.5178	.4851	.3782	-.4970	
.010		-.5363	-.6087		-.1562	-.0486	-.1611	-.3550		
.020		-.4983		.0000	-.2370	-.2157	-.2734	-.4210	-.7428	
.040			-.4728	-.2315						
.041	-.2214									
.050					-.3670	-.4122	-.4765	-.5800		
.069									-.7176	
.080					-.4992					
.081				-.3109						
.086			-.3469							
.094		-.3696								
.113	-.2229									
.150					-.6744	-.6957	-.7005	-.6006		
.157									-.7176	
.163			.0000							
.177				-.3877						
.229		-.2287								
.246			-.2824							
.247	-.2633									
.250					-.6797	-.7720	-.6825	-.5657		
.274				-.4487						
.345									-.5652	
.362		.0142								
.390			-.4153							
.400					-.6657	-.7239		-.4397		
.402				-.5632						
.418										-.4605
.429	-.0363									
.497		-.3075								
.503									-.4756	
.547	-.1073									
.550					-.2882	-.6107				
.565				-.3279						
.600								-.3686		
.633	-.4072									
.637			-.2458							
.650							-.4578			
.670									-.3518	
.700		-.3725				-.4511				
.723										-.3491
.725					.0151					
.777	-.4069									
.750							-.4518	- .608		
.760				.1856						
.775					.1495	-.1759				

AMES 11-073(OA148) -140A/B/C ORB LEFT WING TOP (XEBU83)

ALPHA (4) = 8.023 BETA (1) = .173

SECTION (1)LEFT WING TOP SURF DEPENDENT VARIABLE CP

2Y/BW	.2350	.2990	.3640	.4270	.5340	.6730	.7800	.8870	.9720	1.0000
X/CW										
.793	.1570									
.798			.1805							
.808				.3630						
.834		.1553								
.839			.4829							
.850					.2918	-.0156	-.4411			
.857				.3314						
.862									-.3179	
.865		.6040								
.879			.4053							
.900		.3924			.3218			-.3518		
.905				.2741						
.919			.3412							
.950					.2894	.2205	-.3823			
.953				.2057						
.955			.2925							
.965		.3140								

ALPHA (5) = 11.886 BETA (1) = -3.856 MACH = 1.0968 Q = 598.64 P = 710.95 RN/L = 3.1978

SECTION (1)LEFT WING TOP SURF DEPENDENT VARIABLE CP

2Y/BW	.2350	.2990	.3640	.4270	.5340	.6730	.7800	.8870	.9720	1.0000
X/CW										
.000	-.0452	-.4580	-.6796	-.1513	.3904	.4147	.3890	.2715	-.5998	
.010		-.5336	-.6213		-.4385	-.2900	-.4024	-.5760		
.020		-.5185		.0000	-.5517	-.4607	-.5296	-.6362	-.5918	
.040			-.5161	-.6200						
.041	-.1508									
.050					-.6959	-.6423	-.6918	-.7670		
.069									-.5131	
.080					-.7977					
.081				-.7128						
.090			-.4074							
.094		-.3537								
.113	-.1375									
.150					-.7994	-.7386	-.7124	-.7476		
.157									-.5012	
.163			.0000							
.177				-.5783						
.229		-.3076								
.246			-.3696							
.247	-.1882									
.250					-.8035	-.7432	-.7124	-.7304		

AMES 11-073(OA148) -140A/B/C ORB LEFT WING TOP (XEBUB3)

ALPHA (5) = 11.886 BETA (1) = -3.856

SECTION (1)LEFT WING TOP SURF DEPENDENT VARIABLE CP

2Y/BW	.2350	.2990	.3640	.4270	.5340	.6730	.7800	.8870	.9720	1.0000
X/CW										
.274				-.4624						
.345									-.4992	
.362		-.2106								
.390			-.4569							
.400					-.7053	-.6873		-.5476		
.402				-.6004						
.418										-.4898
.429	-.2623									
.497		-.3783								
.503									-.4859	
.547	-.1290									
.550					-.6683	-.6659				
.565				-.3988						
.600								-.5257		
.633	-.4612									
.637			-.3695							
.650							-.5709			
.670									-.4409	
.700		-.5455				-.6258				
.723										-.3879
.725					-.4148					
.727	-.4966									
.750							-.5459	-.5172		
.760				-.1511						
.775					-.3945	-.5597				
.793	.0647									
.798			-.2632							
.808				.0289						
.834		-.0633								
.839			.2649							
.850					-.2402	-.4855	-.4903			
.857				-.0175						
.862									-.3681	
.865		.4640								
.879			.2671							
.900		.3211			-.1708			-.4939		
.905				-.0036						
.919			.2817							
.950					-.1069	-.3955	-.4479			
.953				.0432						
.955			.2759							
.905		.2865								

AMES 11-073(OA148) -140A/B/C ORB LEFT WING TOP (XE8U83)

ALPHA (5) = 11.964 BETA (2) = .179 MACH = 1.0968 Q = 598.64 P = 710.95 RN/L = 3.1978

SECTION (1)LEFT WING TOP SURF DEPENDENT VARIABLE CP

2Y/BW	.2350	.2990	.3640	.4270	.5340	.6730	.7800	.8870	.9720	1.0000
X/CW										
.000	-.1282	-.6403	-.6198	-.3886	.2130	.2628	.2270	.1087	-.6857	
.010		-.5540	-.6097		-.5871	-.4273	-.5196	-.6984		
.020		-.5295		.0000	-.6721	-.5869	-.6489	-.7503	-.5896	
.040			-.5881	-.3092						
.041	-.2359									
.050					-.7178	-.7259	-.7782	-.8529		
.069									-.5638	
.080					-.7158					
.081				-.2767						
.086			-.5367							
.094		-.6105								
.113	-.2619									
.150					-.6953	-.8010	-.7804	-.8308		
.157									-.5481	
.163			.0000							
.177				-.3762						
.229		-.5951								
.246			-.5121							
.247	-.2626									
.250					-.6801	-.7990	-.7768	-.6356		
.274				-.5422						
.345									-.5325	
.362		-.1530								
.390			-.6286							
.400					-.7190	-.7329		-.5922		
.402				-.6499						
.418										-.5379
.429	-.2352									
.497		-.3422								
.503									-.5177	
.547	-.1118									
.550					-.5772	-.6948				
.565				-.4941						
.600								-.5693		
.633	-.5082									
.637			-.5574							
.650							-.6460			
.670									-.4850	
.700		-.4972				-.6515				
.723										-.4211
.725					-.2539					
.727	-.5284									
.750							-.6045	-.5646		
.760				-.1193						
.775					-.1320	-.4878				

AMES 11-073(OA148) -140A/B/C ORB LEFT WING TOP (XE8U83)

ALPHA (5) = 11.964 BETA (2) = .179

SECTION (1)LEFT WING TOP SURF DEPENDENT VARIABLE CP

2Y/BW	.2350	.2990	.3640	.4270	.5340	.6730	.7800	.8870	.9720	1.0000
X/CW										
.793	-.0196									
.798			.0066							
.808				.0841						
.834		-.0055								
.839			.4060							
.850					-.0284	-.4193	-.5531			
.857				-.0241						
.862									-.4262	
.865		.3278								
.879			.3057							
.900		.3091			-.0441			-.5481		
.905				-.0191						
.919			.2430							
.950					-.0101	-.2278	-.4841			
.953				.0312						
.955			.2326							
.965		.2689								

ALPHA (5) = 11.963 BETA (3) = 4.251 MACH = 1.0968 Q = 598.64 P = 710.95 RN/L = 3.1978

SECTION (1)LEFT WING TOP SURF DEPENDENT VARIABLE CP

2Y/BW	.2350	.2990	.3640	.4270	.5340	.6730	.7800	.6870	.9720	1.0000
X/CW										
.000	-.2076	-.6825	-.6666	-.3986	.0843	.0961	.0478	-.0801	-.7247	
.010		-.6551	-.6557		-.6564	-.5555	-.6572	-.8106		
.020		-.6481		.0000	-.7269	-.6932	-.7569	-.8210	-.6718	
.040			-.6353	-.1577						
.041	-.3258									
.050					-.7540	-.8060	-.8704	-.7361		
.069									-.6444	
.080					-.7496					
.081				-.2800						
.086			-.4504							
.094		-.7217								
.113	-.3261									
.150					-.7289	-.8779	-.8655	-.7177		
.157									-.6238	
.153			.0000							
.177				-.4342						
.229		-.8504								
.2[illegible]5			-.4182							
.247	-.3740									
.250					-.6497	-.8735	-.8253	-.7298		

AMES 11-073(OA148) -140A/B/C ORB LEFT WING TOP (XE8U83)

ALPHA (5) = 11.963 BETA (3) = 4.251

SECTION (1)LEFT WING TOP SURF DEPENDENT VARIABLE CP

2Y/BW	.2350	.2990	.3640	.4270	.5340	.6730	.7800	.8870	.9720	1.0000
X/CW										
.274				-.4403						
.345									-.5949	
.362		-.0281								
.390			- 4823							
.400					-.6417	-.7980		-.7075		
.402				-.5853						
.418										-.5846
.429	-.1167									
.497		-.3220								
.503									-.5796	
.547	-.0947									
.550					-.5181	-.7519				
.565				-.6444						
.600								-.6813		
.633	-.4804									
.637			-.4902							
.650							-.7285			
.670									-.5626	
.700		-.4283				-.6516				
.723										-.4859
.725					-.1090					
.727	-.4881									
.750							-.6809	-.6557		
.760				-.1291						
.775					.0238	-.3468				
.793	-.0322									
.798			-.1245							
.808				.1605						
.834		-.1083								
.839			.3194							
.850					.0156	-.2271	-.6203			
.857				.0787						
.862									-.5216	
.865		.2440								
.879			.2722							
.900		.2208			-.0783			-.6101		
.905				.0249						
.919			.2000							
.950					-.0942	-.0128	-.5137			
.953				.0191						
.955			.1744							
.965		.2027								

AMES 11-073(OA148) -140A/B/C ORB LEFT WING TOP (XEBU84) (05 AUG 75)

REFERENCE DATA

SREF = 2690.0000 SQ.FT. XMRP = 1076.6800 IN. XO
LREF = 474.0000 IN. YMRP = .0000 IN. YO
BREF = 936.0000 IN. ZMRP = 375.0000 IN. ZO
SCALE = .0300

PARAMETRIC DATA

RUDDER = 10.000 SPDBRK = .000
BDFLAP = -11.700 L-ELVN = -10.000
R-ELVN = 10.000 MACH = .900

ALPHA (1) = -3.965 BETA (1) = .165 MACH = .89930 Q = 599.63 P = 1059.2 RN/L = 3.5885

SECTION (1)LEFT WING TOP SURF DEPENDENT VARIABLE CP

2Y/BW	.2350	.2950	.3640	.4270	.5340	.6730	.7800	.8870	.9720	1.0000
X/CW										
.000	-.4619	.0112	-.0120	.1819	.3684	.2498	.1627	.1650	-.7113	
.010		.0483	.0878		.5698	.5213	.4832	.4057		
.020		.0456		.0000	.5037	.4533	.4223	.3640	-.4168	
.040			.1654	.3507						
.041	-.0735									
.050					.3098	.2625	.2410	.1867		
.069									-.4593	
.080					.1309					
.081				.2425						
.086			.2680							
.094		.0444								
.113	.0415									
.150					-.0765	-.0978	-.0955	-.1638		
.157									-.4091	
.163			.0000							
.177				.0072						
.229		.1512								
.246			.0782							
.247	.0685									
.250					-.2429	-.2735	-.3274	-.4418		
.274				-.1231						
.345									-.0753	
.362		.1522								
.390			-.0953							
.400					-.1505	-.2436		-.3806		
.402				-.1407						
.418										-.6172
.429	.1531									
.497		-.0679								
.503									-.0248	
.547	.0277									
.550					-.0266	-.0660				
.565				.0382						
.600								.0705		
.623	-.0764									
.637			.0876							
.650							.1212			
.670									.1025	

AMES 11-073(OA148) -140A/B/C ORB LEFT WING TOP (XEBU84)

ALPHA (1) = -3.965 BETA (1) = .165

SECTION (1)LEFT WING TOP SURF DEPENDENT VARIABLE CP

2Y/BW	.2350	.2990	.3640	.4270	.5340	.6730	.7800	.8870	.9720	1.0000
X/CW										
.700		.1094				.1802				
.723										-1.3663
.725					.2293					
.727	.0778									
.750							.5086	.3594		
.760				.2091						
.775					.5332	.3866				
.793	.2525									
.798			.1798							
.808				.4841						
.834		.1505								
.839			.4587							
.850					.3203	.2338	.2818			
.857				.3084						
.862									.0330	
.865		.4960								
.879			.2965							
.900		.2438			.1938			.1819		
.905				.1970						
.919			.1750							
.950					.1067	.1669	.1572			
.953				.0981						
.955			.0922							
.965		.1195								

ALPHA (2) = .057 BETA (1) = .165 MACH = .89770 Q = 598.28 P = 1060.7 RN/L = 3.5863

SECTION (1)LEFT WING TOP SURF DEPENDENT VARIABLE CP

2Y/BW	.2350	.2990	.3640	.4270	.5340	.6730	.7800	.8870	.9720	1.0000
X/CW										
.000	-.3951	.0277	.1054	.3669	.5139	.4380	.3947	.3887	-.3294	
.010		.0145	.1383		.3696	.3980	.3504	.2145		
.020		-.0006		.0000	.2755	.2375	.2120	.1417	-.3241	
.040			.1674	.1565						
.041	-.1720									
.050					.0306	-.0287	-.0546	-.0930		
.069									-.4099	
.080					-.1718					
.081				.0155						
.086			.1948							
.094		-.0042								
.113	-.0245									
.150					-.3670	-.4092	-.4253	-.4558		

DATE 11 FEB 76 TABULATED PRESSURE DATA - OA148 (AMES 11-073-1) (XEBU84)

AMES 11-073(OA148) -140A/B/C ORB LEFT WING TOP

ALPHA (2) = .057 BETA (1) = .165

SECTION (1)LEFT WING TOP SURF DEPENDENT VARIABLE CP

2Y/BW	.2350	.2990	.3640	.4270	.5340	.6730	.7800	.8870	.9720	1.0000
X/CW										
.157									-.7057	
.163			.0000							
.177				-.2327						
.229		.0945								
.246			-.1027							
.247	.0230									
.250					-.4849	-.6091	-.6606	-.6847		
.274				-.3446					-.1134	
.345										
.362		.0306								
.390			-.2918							
.400					-.2587	-.3639		-.6235		
.402				-.3112						-.0827
.418										
.429	.0883									
.497		-.2399							-.0917	
.503										
.547	-.1079									
.550					-.0647	-.0738				
.565				-.0047						
.600								.0767		
.633	-.2479									
.637			.0489							
.650							.1288			
.670									.0380	
.700		.0614				.1791				
.722										-.6358
.725					.2208					
.727	.0176									
.750							.4897	.3159		
.760				.2125						
.775					.4713	.3635				
.793	.2098									
.798			.1914							
.808				.4521						
.834		.1637								
.839			.4303							
.850					.3135	.2448	.2556			
.857				.3078					-.0040	
.862										
.865		.4206								
.879			.3046							
.900		.2538			.1956			.1461		
.905				.1993						
.919			.1868							

AMES 11-073(OA148) -140A/B/C ORB LEFT WING TOP (XEBU84)

ALPHA (2) = .057 BETA (1) = .165

SECTION (1)LEFT WING TOP SURF DEPENDENT VARIABLE CP

2Y/BW	.2350	.2990	.3640	.4270	.5340	.6730	.7800	.8870	.9720	1.0000
X/CW										
.950					.0964	.1589	.1365			
.953				.0969						
.955			.0985							
.965		.1301								

ALPHA (3) = 3.888 BETA (1) = -3.885 MACH = .89803 Q = 598.39 P = 1080.0 RN/L = 3.5614

SECTION (1)LEFT WING TOP SURF DEPENDENT VARIABLE CP

2Y/BW	.2350	.2990	.3640	.4270	.5340	.6730	.7800	.8870	.9720	1.0000
X/CW										
.000	-.2918	-.0245	.0684	.4237	.6289	.5900	.5698	.5070	-.1734	
.010		-.0761	.0840		.1874	.2250	.1310	-.1139		
.020		-.0775		.0000	.0466	.0003	-.0646	-.1932	-.5250	
.040			.1168	-.0285						
.041	-.1553									
.050					-.2352	-.3183	-.3802	-.4692		
.059									-.6183	
.080					-.4630					
.081				-.2147						
.086			.1115							
.094		-.0486								
.113	-.0894									
.150					-.6991	-.7306	-.7246	-.7275		
.157									-.7619	
.163			.0000							
.177				-.4640						
.229		.0569								
.245			-.2607							
.247	-.0032									
.250					-.7583	-.9197	-.9418	-.7186		
.274				-.5968						
.345									-.3186	
.362		-.0597								
.390			-.5394							
.400					-.3794	-.7041		-.4788		
.402				-.6442						
.418										-.5974
.429	.0537									
.497		-.4290								
.503									-.3239	
.547	-.2205									
.550					-.0372	-.0876				
.565				.0007						

AMES 11-073(OA148) -140A/B/C ORB LEFT WING TOP (XEBUB4)

ALPHA (3) = 3.888 BETA (1) = -3.885

SECTION (1)LEFT WING TOP SURF DEPENDENT VARIABLE CP

2Y/BW	.2350	.2990	.3640	.4270	.5340	.6730	.7800	.8870	.9720	1.0000
X/CW										
.600								-.2862		
.633	-.4968									
.637			.0391							
.650							-.1663			
.670									-.1998	
.700		.0159				.1236				
.723										-.4235
.725					.2052					
.727	-.0322									
.750							.0665	-.1180		
.760				.2445						
.775					.3474	.2852				
.793	.2589									
.798			.2326							
.808				.3977						
.834		.2112								
.839			.4228							
.850					.2861	.2212	.1815			
.857				.3171						
.862									-.0987	
.865		.4961								
.879			.3243							
.900		.2965			.1922			-.0413		
.905				.2203						
.919			.2199							
.950					.0984	.1624	.1375			
.953				.1073						
.955			.1195							
.965		.1565								

ALPHA (3) = 4.092 BETA (2) = .164 MACH = .89803 Q = 598.38 P = 1060.0 RN/L = 3.5814

SECTION (1)LEFT WING TOP SURF DEPENDENT VARIABLE CP

2Y/BW	.2350	.2990	.3640	.4270	.5340	.6730	.7800	.8870	.9720	1.0000
X/CW										
.000	-.3511	-.1423	-.0443	.3221	.5422	.5018	.4678	.3960	-.3331	
.010		-.1702	-.0155		.0633	.0991	-.0053	-.2437		
.020		-.1505		.0000	-.0631	-.1085	-.1840	-.3222	-.6451	
.040			.0504	-.1035						
.041	-.3663									
.050					-.3070	-.3970	-.4680	-.5622		
.069									-.7096	
.080					-.5060					

AMES 11-073(OA148) -140A/B/C ORB LEFT WING TOP (XE8U84)

ALPHA (3) = -.092 BETA (2) = .164

SECTION (1)LEFT WING TOP SURF DEPENDENT VARIABLE CP

2Y/BW	.2350	.2990	.3640	.4270	.5340	.6730	.7800	.8870	.9720	1.0000
X/CW										
.081				-.2575						
.086			.0646							
.094		-.0752								
.113	-.1034									
.150					-.7179	-.7683	-.7666	-.7861		
.157									-.7686	
.163			.0000							
.177				-.4858						
.229		.0357								
.246			-.2762							
.247	-.0245									
.250					-.7531	-.9172	-.9778	-.7517		
.274				-.5917						
.345									-.3150	
.362		-.0740								
.390			-.5395							
.400					-.4145	-.8088		-.5011		
.402				-.6650						
.418										-.6964
.429	.0332									
.497		-.4232								
.503									-.2977	
.547	-.2377									
.550					-.0801	-.0705				
.565				-.0492						
.600								-.2957		
.633	-.4994									
.637			-.0160							
.650							-.1498			
.670									-.1581	
.700		-.0167				.1015				
.723										-.4891
.725					.1694					
.727	-.0498									
.750							.1452	-.1293		
.760				.2019						
.775					.3256	.2440				
.793	.2077									
.798			.1831							
.808				.3365						
.834		.1341								
.839			.3987							
.850					.2686	.1855	.2174			
.857				.2738						
.862									-.0876	

AMES 11-073(OA148) -140A/B/C ORB LEFT WING TOP (XEBUB4)

ALPHA (3) = 4.092 BETA (2) = .164

SECTION (1)LEFT WING TOP SURF DEPENDENT VARIABLE CP

2Y/BW	.2350	.2990	.3640	.4270	.5340	.6730	.7800	.8870	.9720	1.0000
X/CW										
.865		.4596								
.875			.2827							
.900		.2404			.1737			-.0239		
.905				.1849						
.919			.1800							
.950					.0782	.1188	.1543			
.953				.0746						
.955			.0918							
.965		.1296								

ALPHA (3) = 3.996 BETA (3) = 4.248 MACH = .89803 Q = 598.38 P = 1060.0 RN/L = 3.5814

SECTION (1)LEFT WING TOP SURF DEPENDENT VARIABLE CP

2Y/BW	.2350	.2990	.3640	.4270	.5340	.6730	.7800	.8870	.9720	1.0000
X/CW										
.000	-.4179	-.2701	-.1618	.1942	.4391	.3931	.3569	.2620	-.5621	
.010		-.2530	-.0655		-.0669	-.0391	-.1533	-.3887		
.020		-.1959		.0000	-.1645	-.2273	-.3175	-.4853	-.8039	
.040			.0116	-.1651						
.041	-.5005									
.050					-.3786	-.4772	-.5604	-.6708		
.069									-.8067	
.080					-.5475					
.081				-.2965						
.096			.0263							
.094		-.0890								
.113	-.1078									
.150					-.7259	-.7993	-.8113	-.8421		
.157									-.8002	
.163			.0000							
.177				-.4882						
.229		.0093								
.246			-.2702							
.247	-.0266									
.250					-.7355	-.8633	-.9972	-.8021		
.274				-.5730						
.345									-.3035	
.362		-.0834								
.390			-.5166							
.400					-.4717	-.8536		-.5205		
.402				-.5564						
.419										-.7108
.429	.0227									

AMES 11-073(OA148) -140A/B/C ORB LEFT WING TOP (XEBUB4)

ALPHA (3) = 3.996 BETA (3) = 4.248

SECTION (1)LEFT WING TOP SURF DEPENDENT VARIABLE CP

2Y/BW	.2350	.2990	.3640	.4270	.5340	.6730	.7800	.8870	.9720	1.0000
X/CW										
.497		-.4305								
.503									-.2485	
.547	-.2421									
.550					-.1326	-.1117				
.565				-.1338						
.600								-.2987		
.633	-.4839									
.637			-.0933							
.650							-.0765			
.670									-.1341	
.700		-.0545				.0651				
.723										-.5150
.725					.1264					
.727	-.0972									
.750							.2831	-.0685		
.760				.1376						
.775					.2470	.1624				
.793	.1286									
.798			.1105							
.808				.3329						
.834		.0768								
.839			.3883							
.850					.2309	.1715	.2210			
.857				.2298						
.862									-.0714	
.865		.4395								
.879			.2430							
.900		.2001			.1499			.0143		
.905				.1426						
.919			.1466							
.950					.0537	.1221	.1414			
.953				.0449						
.955			.0715							
.965		.0938								

AMES 11-073(OA149) -140A/B/C ORB LEFT WING TOP (XEBUB4)

ALPHA (4) = 8.008 BETA (1) = .163 MACH = .89820 Q = 598.16 P = 1059.3 RN/L = 3.5792

SECTION (1)LEFT WING TOP SURF DEPENDENT VARIABLE CP

2Y/BW	.2350	.2990	.3640	.4270	.5340	.6730	.7800	.8870	.9720	1.0000
X/CW										
.000	-.3458	-.4829	-.4052	.0447	.3628	.3402	.2893	.1546	-.8620	
.010		-.4991	-.2053		-.4140	-.3285	-.4771	-.7274		
.020		-.3645		.0000	-.4842	-.5253	-.6137	-.8128	-1.1277	
.040			-.0740	-.4389						
.041	-.4056									
.050					-.6690	-.7464	-.8488	-.9912		
.069									-1.1215	
.080					-.8276					
.081				-.5825						
.086			-.0675							
.094		-.1840								
.113	-.1979									
.150					-.9686	-1.0919	-.9949	-.8439		
.157									-.7158	
.163			.0000							
.177				-.6642						
.229		-.1080								
.246			-.4177							
.247	-.0650									
.250					-.9973	-1.0731	-.8873	-.6578		
.274				-.7421						
.345									-.4571	
.362		-.1852								
.390			-.8660							
.400					-.7608	-.7862		-.5519		
.402				-.8727						
.418										-.5482
.429	.0039									
.497		-.5740								
.503									-.4477	
.547	-.3547									
.550					-.7093	-.5882				
.565				-.1505						
.600								-.4583		
.633	-.7023									
.637			-.1091							
.650							-.5298			
.670									-.3773	
.700		-.0858				-.3719				
.723										-.4832
.725					.0794					
.737	-.1427									
.750							-.4388	-.4087		
.760				.1575						
.775					.2771	.0120				

AMES 11-073(OA148) -140A/B/C ORB LEFT WING TOP (XEBUB4)

ALPHA (4) = 8.008 BETA (1) = .163

SECTION (1)LEFT WING TOP SURF DEPENDENT VARIABLE CP

2Y/BW	.2350	.2990	.3640	.4270	.5340	.6730	.7800	.8870	.9720	1.0000
X/CW										
.793	.1432									
.798			.0782							
.808				.3404						
.834		.0834								
.839			.3489							
.850					.2462	.0562	-.3504			
.857				.2053						
.862									-.3202	
.865		.4732								
.879			.2300							
.900		.2377			.1585			-.3432		
.905				.1106						
.919			.1458							
.950					.0794	.0832	-.2762			
.953				.0080						
.955			.0803							
.965		.1285								

ALPHA (5) = 11.969 BETA (1) = .169 MACH = .89670 Q = 597.36 P = 1061.4 RN/L = 3.5769

SECTION (1)LEFT WING TOP SURF DEPENDENT VARIABLE CP

2Y/BW	.2350	.2990	.3640	.4270	.5340	.6730	.7800	.8870	.9720	1.0000
X/CW										
.000	-.3812	-.7763	-.3283	-.3556	.0629	.0528	-.0068	-.1647	-.7024	
.010		-.5397	-.2664		-.8583	-.7583	-.9132	-.9157		
.020		-.4925		.0000	-.9706	-.9421	-1.0615	-.6891	-.6383	
.040			-.2551	-.5346						
.041	-.4339									
.050					-1.0699	-1.1182	-1.0632	-.6624		
.069									-.5753	
.080					-1.1244					
.081				-.6220						
.086			-.2532							
.094		-.4761								
.113	-.2513									
.150					-1.2194	-1.0003	-1.0056	-.6527		
.157									-.5575	
.163			.0000							
.177				-.7334						
.229		-.5758								
.245			-.5803							
.247	-.1488									
.250					-.9857	-.9245	-.8909	-.6674		

AMES 11-073(OA148) -140A/B/C ORB LEFT WING TOP (XE8U84)

ALPHA (5) = 11.969 BETA (1) = .169

SECTION (1)LEFT WING TOP SURF DEPENDENT VARIABLE CP

2Y/BW	.2350	.2990	.3640	.4270	.5340	.6730	.7800	.8870	.9720	1.0000
X/CW										
.274				-.8352						
.345									-.5150	
.362		-.2773								
.390			-.7774							
.400					-.8029	-.8093		-.6363		
.402				-.9245						
.419										-.5017
.429	-.0540									
.497		-.7305								
.503									-.4868	
.547	-.4941									
.550					-.6582	-.7052				
.565				-.3705						
.600								-.5932		
.633	-.8431									
.637			-.3273							
.650							-.6551			
.670									-.4726	
.700		-.2061				-.5844				
.723										-.4705
.725					-.2346					
.727	-.2461									
.750							-.6065	-.5778		
.760				-.1211						
.775					-.0760	-.4666				
.793	.0690									
.798			-.1154							
.808				.0262						
.834		-.0441								
.839			.2095							
.850					-.0426	-.4405	-.5631			
.857				-.0896						
.862									-.4694	
.865		.3092								
.879			.1207							
.900		.2033			-.0642			-.5351		
.905				-.1466						
.919			.0714							
.950					-.0695	-.3048	-.4934			
.953				-.1916						
.955			.0498							
.905		.1238								

AMES 11-073(OA148) -140A/B/C ORB LEFT WING TOP (XEBU85) (05 AUG 75)

REFERENCE DATA

SREF = 2690.0000 SQ.FT. XMRP = 1076.6800 IN. XO
LREF = 474.8000 IN. YMRP = .0000 IN. YO
BREF = 936.0680 IN. ZMRP = 375.0000 IN. ZO
SCALE = .0300

PARAMETRIC DATA

RUDDER = 10.000 SPDBRK = .000
BDFLAP = -11.700 L-ELVN = -10.000
R-ELVN = 10.000 MACH = .600

ALPHA (1) = -3.903 BETA (1) = .164 MACH = .59620 Q = 593.85 P = 2386.4 RN/L = 4.8166

SECTION (1)LEFT WING TOP SURF DEPENDENT VARIABLE CP

2Y/BW	.2350	.2990	.3640	.4270	.5340	.6730	.7800	.8870	.9720	1.0000
X/CW										
.000	-.1703	-.0657	-.1196	-.0163	.0623	-.1002	-.1958	-.1623	-1.0964	
.010		-.0160	-.0162		.4639	.4384	.4182	.3826		
.020		-.0124		.0000	.4235	.4064	.3935	.3585	-.3224	
.040			.0689	.2523						
.041	-.0711									
.050					.2425	.2368	.2341	.2148		
.069									-.2569	
.080					.0824					
.081				.1542						
.086			.1775							
.094		-.0176								
.113	-.0334									
.150					-.0971	-.0983	-.0783	-.0888		
.157									-.2085	
.163			.0000							
.177				-.0436						
.229		.0828								
.246			-.0031							
.247	.0111									
.250					-.2156	-.2343	-.2410	-.2627		
.274				-.1459						
.345									-.1031	
.362		.0556								
.390			-.1266							
.400					-.1515	-.1783		-.2004		
.402				-.1475						
.418										-.8914
.429	.0642									
.497		-.1084								
.503									-.0790	
.547	-.0379									
.550					-.0422	-.0571				
.555				.0003						
.600								-.0021		
.633	-.1016									
.637			.0369							
[illegible]							.0522			
[illegible]									.0121	

AMES 11-073(OA148) -140A/B/C ORB LEFT WING TOP (XE8U85)

ALPHA (1) = -3.903 BETA (1) = .164

SECTION (1)LEFT WING TOP SURF DEPENDENT VARIABLE CP

2Y/BW	.2350	.2990	.3640	.4270	.5340	.6730	.7800	.8870	.9720	1.0000
X/CW										
.700		.0537				.0940				
.723										-2.1751
.725					.1485					
.727	.0275									
.750							.3930	.2391		
.760				.1260						
.775					.4206	.2737				
.793	.1856									
.798			.1169							
.808				.3553						
.834		.0988								
.839			.3430							
.850					.2151	.1596	.1884			
.857				.2083						
.862									-.0294	
.865		.3919								
.879			.1990							
.900		.1544			.1156			.1170		
.905				.1161						
.919			.0963							
.950					.0537	.1064	.1166			
.953				.0481						
.955			.0320							
.965		.0617								

ALPHA (2) = .072 BETA (1) = .163 MACH = .59620 Q = 593.87 P = 2387.1 RN/L = 4.8288

SECTION (1)LEFT WING TOP SURF DEPENDENT VARIABLE CP

2Y/BW	.2350	.2990	.3640	.4270	.5340	.6730	.7800	.8870	.9720	1.0000
X/CW										
.000	-.1452	-.0148	.0420	.2566	.4002	.3315	.2959	.3093	-.2991	
.010		-.0244	.0717		.3029	.3435	.3078	.2023		
.020		-.0369		.0000	.1933	.1837	.1692	.1341	-.1657	
.040			.0938	0623						
.041	-.1182									
.050					-.0384	-.0570	-.0769	-.0763		
.069									-.2202	
.080					-.2038					
.081				-.0644						
.086			.1058							
.094		-.0581								
.113	-.0811									
.150					-.3312	-.3519	-.3535	-.3319		

AMES 11-073(OA148) -140A/B/C ORB LEFT WING TOP (XE8U85)

ALPHA (2) = .072 BETA (1) = .163

SECTION (1)LEFT WING TOP SURF DEPENDENT VARIABLE CP

2Y/BW	.2350	.2990	.3640	.4270	.5340	.6730	.7800	.8870	.9720	1.0000
X/CW										
.157									-.2439	
.163			.0000							
.177				-.2465						
.229		.0238								
.246			-.1630							
.247	-.0319									
.250					-.3872	-.4271	-.4455	-.4640		
.274				-.2987						
.345									-.1593	
.362		-.0555								
.390			-.2468							
.400					-.2383	-.27[illegible]		-.2946		
.402				-.2376						
.418										-.1747
.429	-.0049									
.497		-.2180								
.503									-.1302	
.547	-.1494									
.550					-.0793	-.1037				
.555				-.0370						
.600								-.0295		
.633	-.1886									
.637			.0060							
.650							.0340			
.670									.0164	
.700		.0181				.0832				
.723										-.7465
.725					.1373					
.727	-.0121									
.750							.3767	.2243		
.760				.1201						
.775					.3944	.2711				
.793	.1576									
.798			.1137							
.908				.3393						
.934		.1014								
.839			.3316							
.850					.2105	.1695	.1801			
.857				.2054						
.862									.0082	
.865		.3423								
.879			.2016							
.900		.1630			.1154			.1154		
.905				.1166						
.919			.1020							

AMES 11-073(OA148) -140A/B/C ORB LEFT WING TOP (XEBU85)

ALPHA (2) = .072 BETA (1) = .163

SECTION (1)LEFT WING TOP SURF DEPENDENT VARIABLE CP

2Y/BW	.2350	.2990	.3640	.4270	.5340	.6730	.7800	.8870	.9720	1.0000
X/CW										
.950					.0562	.1160	.1133			
.953				.0532						
.955			.0405							
.965		.0747								

ALPHA (3) = 4.077 BETA (1) = .160 MACH = .59680 Q = 595.04 P = 2386.4 RN/L = 4.8327

SECTION (1)LEFT WING TOP SURF DEPENDENT VARIABLE CP

2Y/BW	.2350	.2990	.3640	.4270	.5340	.6730	.7800	.8870	.9720	1.0000
X/CW										
.000	-.1755	-.1631	-.1065	.0083	.4337	.4126	.3898	.3329	-.2051	
.010		-.1978	-.0814		-.1051	-.0535	-.1409	-.3558		
.020		-.1791		.0000	-.2233	-.2648	-.3162	-.4145	-.4479	
.040			-.0349	-.2405						
.041	-.1638									
.050					-.4349	-.5186	-.5526	-.5457		
.069									-.4826	
.080					-.5822					
.081				-.3607						
.086			-.0420							
.094		-.1282								
.113	-.1236									
.150					-.5946	-.6742	-.6845	-.6285		
.157									-.4922	
.163			.0000							
.177				-.4742						
.229		-.0461								
.246			-.3416							
.247	-.0735									
.250					-.5682	-.6365	-.6712	-.6856		
.274				-.4560						
.345									-.3524	
.362		-.1781								
.390			-.3649							
.400					-.3136	-.3598		-.3864		
.402				-.3103						
.418										-.3700
.429	-.0735									
.497		-.3362								
.503									-.2849	
.547	-.2709									
.550					-.0979	-.1285				
.565				-.0562						

AMES 11-073(OA148) -140A/B/C ORB LEFT WING TOP (XEBUBS)

ALPHA (3) = 4.077 BETA (1) = .160

SECTION (1)LEFT WING TOP SURF DEPENDENT VARIABLE CP

2Y/BW	.2350	.2990	.3640	.4270	.5340	.6730	.7800	.8870	.9720	1.0000
X/CW										
.600								-.0571		
.633	-.2747									
.637			-.0225							
.650							.0246			
.670									-.0301	
.700		-.0299				.0811				
.723										-.1637
.725					.1272					
.727	-.0524									
.750							.3686	.2134		
.760				.1350						
.775					.3264	.2578				
.793	.1639									
.798			.1147							
.808				.2746						
.834		.0989								
.839			.2889							
.850					.2030	.1820	.1791			
.857				.2044						
.862									.0285	
.865		.3510								
.879			.1998							
.900		.1735			.1227			.1257		
.905				.1270						
.919			.1149							
.950					.0627	.1267	.1295			
.953				.0603						
.955			.0553							
.965		.0892								

ALPHA (4) = 8.047 BETA (1) = .158 MACH = .59710 Q = 595.63 P = 2396.4 RN/L = 4.8284

SECTION (1)LEFT WING TOP SURF DEPENDENT VARIABLE CP

2Y/BW	.2350	.2990	.3640	.4270	.5340	.6730	.7800	.8870	.9720	1.0000
X/CW										
.000	-.2641	-.4980	-.5473	-.1659	.1160	.0772	-.0034	-.1845	-.9685	
.010		-.4899	-.4011		-.7881	-.7841	-1.0125	-1.3503		
.020		-.4017		.0000	-.8403	-.9661	-1.1230	-1.3543	-1.1902	
.040			-.2544	-.6519						
.041	-.2229									
.050					-.9615	-1.1267	-1.2312	-1.3005		
.069									-1.0607	
.080					-1.0474					

AMES 11-073(OA148) -140A/B/C ORB LEFT WING TOP (XEBU85)

ALPHA (4) = 8.047 BETA (1) = .158

SECTION (1)LEFT WING TOP SURF DEPENDENT VARIABLE CP

2Y/BW	.2350	.2990	.3640	.4270	.5340	.6730	.7800	.8870	.3720	1.0000
X/CW										
.081				-.7058						
.086			-.2253							
.094		-.2223								
.113	-.1374									
.150					-.8883	-1.0372	-1.0745	-.9757		
.157									-.9378	
.153			.0000							
.177				-.6911						
.229		-.1658								
.246			-.5129							
.247	-.1158									
.250					-.7312	-.8226	-.8781	-.9453		
.274				-.5729						
.345									-.6564	
.362		-.3527								
.390			-.4736							
.400					-.3409	-.4251		-.5050		
.402				-.3687						
.418										-1.5518
.429	-.1927									
.457		-.4932								
.503									-.5449	
.547	-.3986									
.560					-.1038	-.1271				
.565				-.1334						
.600								-.1212		
.633	-.3555									
.637			-.1213							
.650							-.0071			
.670									-.2153	
.700		-.0230				.0594				
.723										-.3954
.725					.0749					
.727	-.0729									
.750							.3189	.1854		
.760				.0862						
.775					.1641	.1741				
.793	.1559									
.798			.0690							
.808				.2439						
.834		.0994								
.839			.3305							
.850					.1467	.1809	.1688			
.957				.1454						
.862									-.1132	

AMES 11-073(OA148) -140A/B/C ORB LEFT WING TOP (XEBU85)

ALPHA (4) = 8.047 BETA (1) = .158

SECTION (1)LEFT WING TOP SURF DEPENDENT VARIABLE CP

2Y/BW	.2350	.2990	.3640	.4270	.5340	.6730	.7800	.8870	.9720	1.0000
X/CW										
.865		.3998								
.870			.2171							
.900		.1820			.0945			.1080		
.905				.0742						
.919			.1303							
.950					.0596	.1292	.1205			
.953				.0191						
.955			0889							
.965		.1021								

ALPHA (5) = 12.045 BETA (1) = .156 MACH = .59710 Q = 595.63 P = 2386.4 RN/L = 4.8340

SECTION (1)LEFT WING TOP SURF DEPENDENT VARIABLE CP

2Y/BW	.2350	.2990	.3640	.4270	.5340	.6730	.7800	.8870	.9720	1.0000
X/CW										
.000	-.4066	-.3080	-.8791	-.7586	-.4688	-.5797	-.7253	-.9754	-2.2828	
.010		-.6345	-.4401		-1.7251	-1.8564	-2.2261	-2.6562		
.020		-.4808		.0000	-1.6331	-1.9610	-2.3900	-2.7446	-1.9694	
.040			-.3938	-.9197						
.041	-.3624									
.050					-1.5655	-1.9120	-2.2743	-2.5639		
.069									-1.5984	
.080					-1.5175					
.081				-.8547						
.086			-.4452							
.094		-.5272								
.113	-.2417									
.150					-1.1000	-1.3069	-1.3277	-1.2170		
57									-1.3635	
.63			.0000							
.177				-.8464						
.229		-.6807								
.246			-.7848							
.247	-.1666									
.250					-.7311	-.9314	-1.0002	-1.0439		
.274				-.7394						
.345									-1.1873	
.372		-.5457								
.390			-.5786							
.400					-.4421	-.3781		-.5236		
.402				-.4343						
.419										-1.4114
429	-.2394									

AMES 11-073(OA148) -140A/B/C ORB LEFT WING TOP (XEBU85)

ALPHA (5) = 12.046 BETA (1) = .156

SECTION (1)LEFT WING TOP SURF DEPENDENT VARIABLE CP

2Y/BW	.2350	.2930	.3640	.4270	.5340	.6730	.7800	.8870	.9720	1.0000
X/CW										
.497		-.6629								
.503									-1.0315	
.547	-.5249									
.550					-.2724	-.1682				
.565				-.1635						
.600								-.2081		
.633	-.4459									
.637			-.2298							
.650							-.0983			
.670									-.6568	
.700		-.0667				-.0332				
.723										-.4445
.725					.0872					
.727	-.1128									
.750							.0017	-.0646		
.760				-.0417						
.775					.2491	.0431				
.793	.1337									
.798			.0399							
.808				.1082						
.834		.0903								
.839			.3236							
.850					.1837	.0134	.0479			
.857				.0165						
.862									-.4040	
.865		.3942								
.879			.2128							
.900		.2218			.1176			.0154		
.905				-.0239						
.919			.1478							
.950					.0798	.0537	.0677			
.953				-.0500						
.955			.1058							
.965		.1387								